1.2.3. Safety risks

1.2.3.1. Risks associated with live electric parts

Voltage related risks, general

- Although troubleshooting may, on occasion, need to be carried out while the power supply is turned on, the robot must be turned off (by setting the mains switch to OFF) when repairing faults, disconnecting electric leads and disconnecting or connecting units.
- The mains supply to the robot must be connected in such a way that it can be turned off from outside the robot's working space.

Voltage related risks, IRC5 controller

A danger of high voltage is associated with, for example, the following parts:

- Be aware of stored electrical energy (DC link, Ultracapacitor bank unit) in the controller.
- Units such as I/O modules, can be supplied with power from an external source.
- The mains supply/mains switch
- The transformers
- The power unit
- The control power supply (230 VAC)
- The rectifier unit (400-480 VAC and 700 VDC. Note: Capacitors!)
- The drive unit (700 VDC)
- The drive system power supply (230 VAC)
- The service outlets (115/230 VAC)
- The customer power supply (230 VAC)
- The power supply unit for additional tools, or special power supply units for the machining process.
- The external voltage connected to the controller remains live even when the robot is disconnected from the mains.
- Additional connections.

Voltage related risks, tools, material handling devices, etc.

Tools, material handling devices, etc., may be live even if the robot system is in the OFF position. Power supply cables which are in motion during the working process may be damaged.

© Copyright 2004-2010 ABB. All rights reserved.

2.6.2. Drive System 04 or 09?

Overview

The IRC5 Controller is delivered with either Drive System 04 or Drive System 09. Their function is the same, but for maintenance and when connecting additional axes it is necessary to know which drive system the controller has.

Drive System 04

In Drive System 04 it is easy to see one drive unit for each robot axis. The axis computer used with Drive System 04 is slightly larger than the one for Drive System 09.

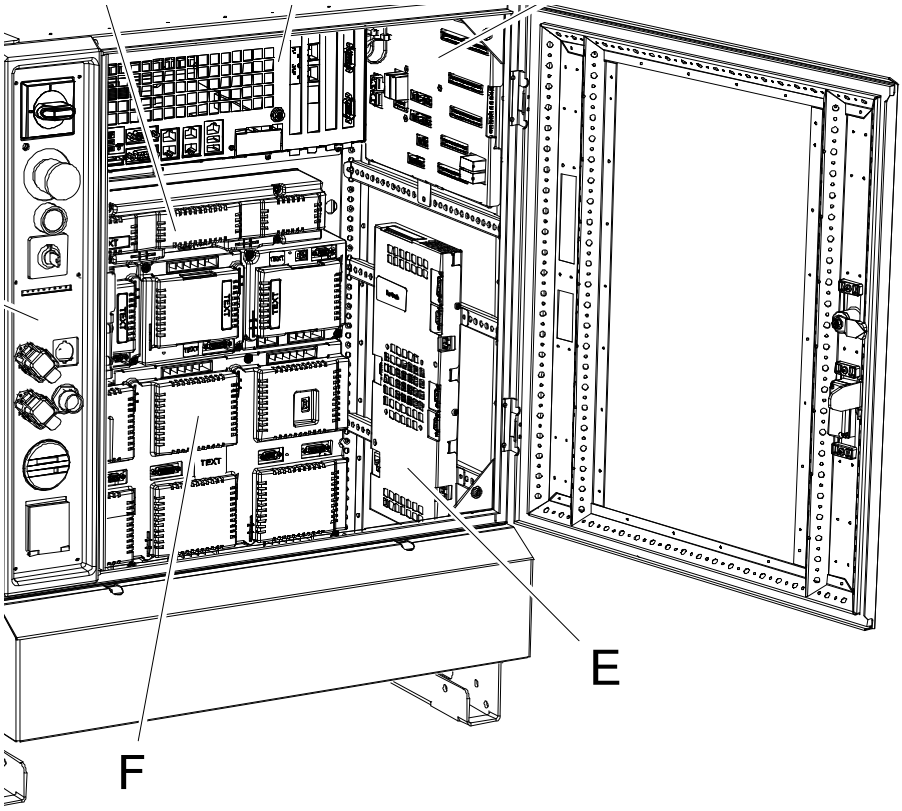

xx0500001858

E	Axis computer
F	Drive system

© Copyright 2004-2010 ABB. All rights reserved.

Continues on next page

2.6.2. Drive System 04 or 09?

Continued

Drive System 09

In Drive system 09 there is only one unit including rectifier, capacitors and drive units for all robot axes, the Main Drive Unit. The axis computer used with Drive System 09 is slightly smaller than the one for Drive System 04.

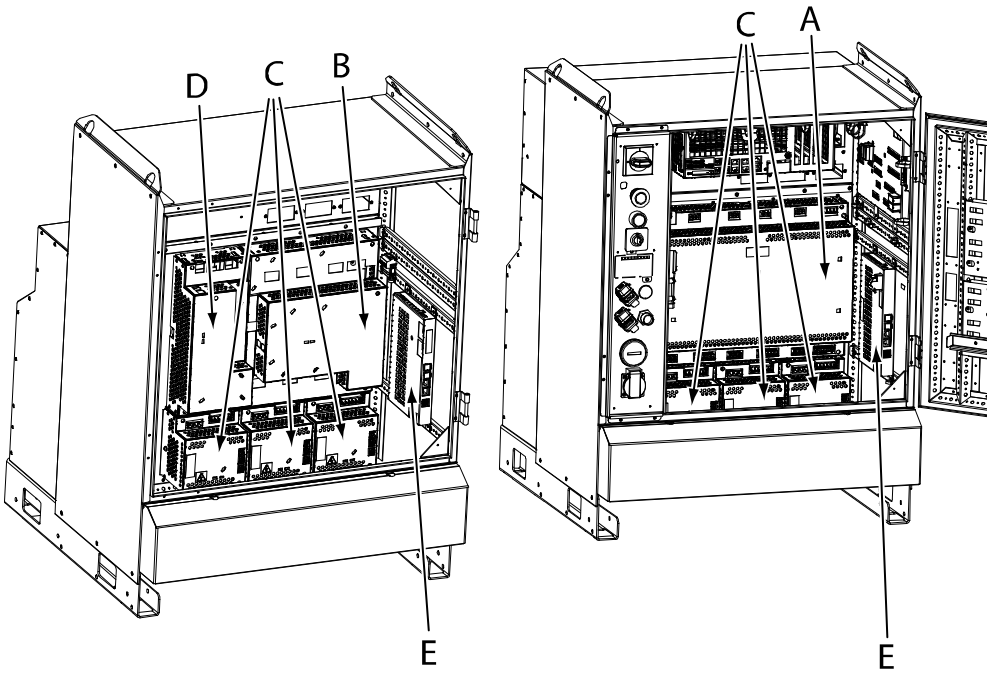

xx1000000001

A	Main Drive Unit for large robots
B	Main Drive Unit for small robots
C	Additional Drive Units (for additional axes)
D	Additional Rectifier Unit (only used for additional axes in combination with small robots)
E	Axis computer

© Copyright 2004-2010 ABB. All rights reserved.

Continued

Pos.	Identification	Description	Art. no.	Note
1	DSQC 620_C4	Capacitor unit	3HAC14551-3	
Z2	DSQC 618_R2	Rectifier	3HAC14549-2	
Y2, X2	DSQC 619	Optional drive units for external axes	3HAC14550-4	Size: 1W
Z4, Y4, X4, Z3, Y3, X3	DSQC 617_3V3W	Main Drive unit	3HAC025338-006	Z4 - X3 is ONE unit!

IRB 4600, 6600, 7600

The figures show the drive unit with and without additional axes respectively. The table specifies which units may be fitted in which positions.

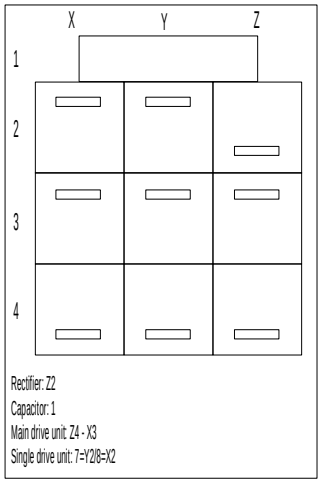

xx0300000184

Pos.	Identification	Description	Art. no.	Note
1	DSQC 620_C3	Capacitor unit	3HAC14551-2	
Z2	DSQC 618_R3	Rectifier	3HAC14549-3	
Y2, X2	DSQC 619	Optional drive units for external axes	3HAC14550-4	Size: 1W
Z4, Y4, X4, Z3, Y3, X3	DSQC 617_3V3W	Main Drive unit	3HAC025338-006	Z4 - X3 is ONE unit!

© Copyright 2004-2010 ABB. All rights reserved.

4.15. Replacement of servo drive units, rectifier and capacitor unit (Drive System 04)

Location

The illustration below shows the location of the servo drive units, rectifiers and capacitor units in a Single Cabinet Controller.

In the Dual Cabinet Controller the servo drive components are located in the Drive Module.

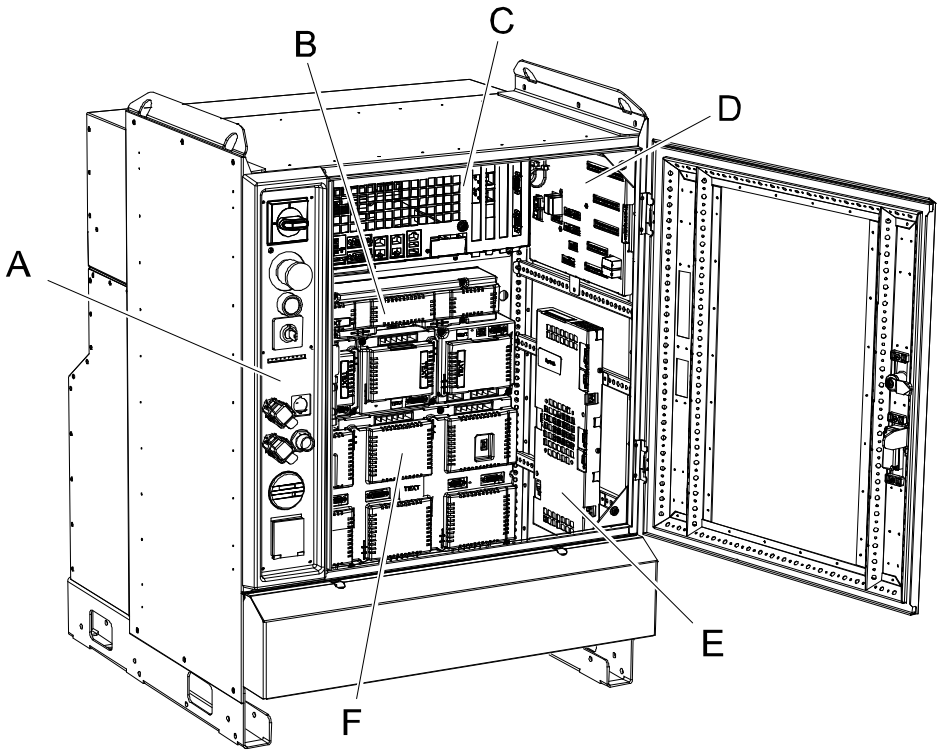

xx0500001858

A	Operator’s panel
B	Capacitor
C	Computer unit
D	Panel board unit
E	Axis computer
F	Drive system (drive units and rectifier)

Configuration

The drive module exists in a number of versions, these are described in section *Configuration of Drive System 04, IRC5 on page 91*

© Copyright 2004-2010 ABB. All rights reserved.

Continues on next page

Continued

Required equipment

Equipment	Note
Drive units, rectifiers and capacitor units	Specified in section *Configuration of Drive System 04, IRC5 on page 91*
Standard toolkit	The contents are defined in section *Standard toolkit, IRC5 on page 299*.
Other tools and procedures may be required. See references to these procedures in the step-by-step instructions below.	These procedures include references to the tools required.
Circuit Diagram	See *Circuit Diagram on page 319*.

Removal

The procedure below details how to remove the servo drive units, rectifiers and capacitor units.

	Action	Note/Illustration
1.	**DANGER!** Before commencing any work inside the cabinet, please observe the safety information in section *DANGER - Make sure that the main power has been switched off! on page 30*.	
2.	If an EPS or SafeMove board (option *Electronic Position Switches* or *SafeMove*) is mounted the Axis computer unit needs to be removed before removal of the servo drive units, rectifiers and capacitors.	See *Replacement of EPS board DSQC 646 on page 238* or *Replacement of SafeMove board DSQC 647 on page 242*.
3.	Disconnect all connectors from the unit to be replaced.	
4.	Remove the busbar between units.	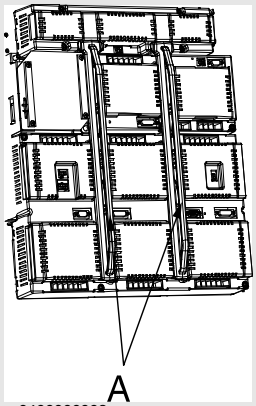 xx0400000998 Parts: • A: bus bar

Continues on next page

© Copyright 2004-2010 ABB. All rights reserved.

4.15. Replacement of servo drive units, rectifier and capacitor unit (Drive System 04)

Continued

	Action	Note/Illustration
5.	Remove the drive unit after unscrewing its *attachment screws* .	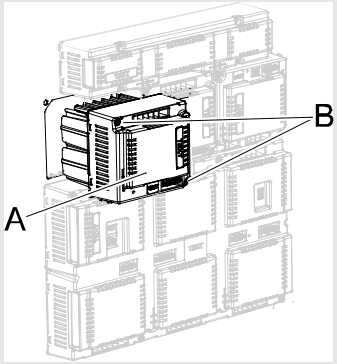 xx0500002001 Parts: • A: drive unit • B: attachment screw

Refitting

The procedure below details how to refit the servo drive units, rectifiers and capacitor units.

	Action	Note/Illustration
1.	**DANGER!** Before commencing any work inside the cabinet, please observe the safety information in section *DANGER - Make sure that the main power has been switched off! on page 30*.	
2.	Fit the unit in its intended position and orientation. Secure it with its *attachment screws*.	
3.	Reconnect all *busbars* between units.	
4.	Reconnect any connectors disconnected at removal.	
5.	Refit the Axis computer unit if it was removed before the drive unit was removed.	See *Replacement of EPS board DSQC 646 on page 238* or *Replacement of SafeMove board DSQC 647 on page 242*.

© Copyright 2004-2010 ABB. All rights reserved.