ACV 700
DCF 500/700
DCS 500
DCV 700
TSU

DDCTool

User's Manual

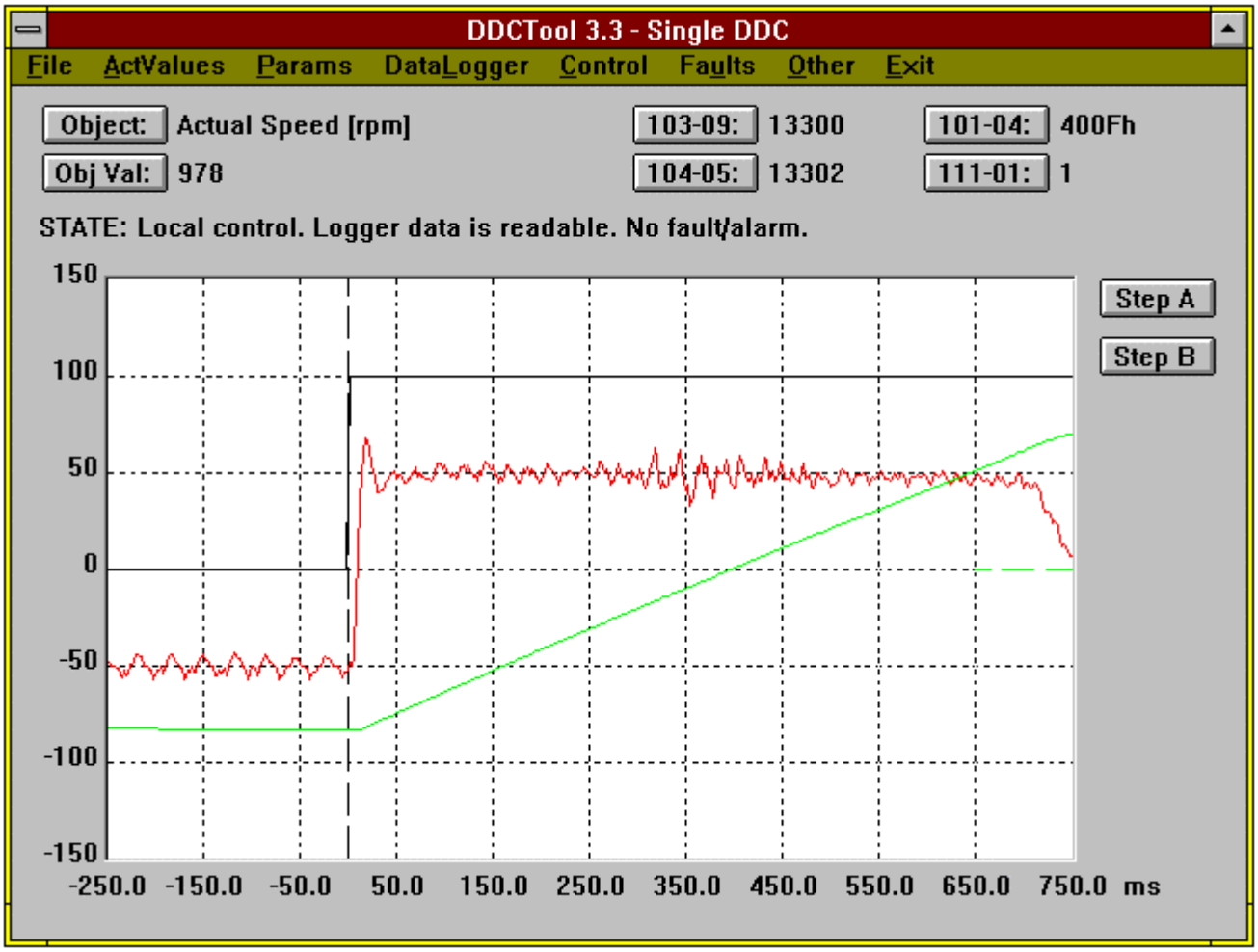

Channel A is used for the DDCTool communication. For channel A there are two types of connectors, V2 and V5 for plastic fibre cable and V1 and V4 for glass fibre cable.

On SNAT 601/609 TAI connectors V10 (IN1) and V11 (OUT1) are used. On SDCS-COM-1 connectors V1 (IN1) and V2 (OUT1) are used.

Make sure that light transmitters are connected to light receivers (do not connect a receiver to another receiver!).

Glass fibre cable is not included in the DDCTool package. It has to be ordered separately. When a glass fibre cable is used, an optical distributor YPC115A is required between the DDCTool board and the target system (see *Figures 3 - 6* and *3 - 7*).

Connecting the DDCTool board to multiple DDCs

In the case of only one DDC, a direct connection between the DDCTool board and the DDC is sufficient.

If there are several DDCs and only one PC, YPC111A optical distributors can be used between the DDCTool board and the DDCs. YPC111A has one connection for the DDCTool board and four connections for the DDCs or lower level optical distributors. When using the YPC111A board and plastic fibre cable, the maximum length between the boards is 20 metres.

If the lengths between the DDCTool boards are over 20 metres the YPC115A board and glass fibre cable should be used. The maximum length in this case is 1000 metres.

Optical distributors can be connected to a tree or chain form. The height of the tree / length of the chain depends on the number of DDCs in the system (max number of DDCs is 249).

Optical distributors use +24 V auxiliary power.

Trouble-shooting the DDCTool board

If the DDCTool program displays a "*Cannot start drive communication*" error box during its startup, consider the following actions
(NOTE: If error message "*PC OVERLOAD*" appears on the screen or DDCTool fails during parameter upload then this means that the DDCTool board works OK but you must increase the value of the startup parameter **M**, see *Appendix 1*):

- Run the test program to check that the DDCTool board is working (see Chapter *Testing the DDCTool board*).
  If the test fails, check the configuration of your PC. Follow the instructions given by the test program.
  If you have other PCs available, try to use the DDCTool board with one of them.

- If the test program has checked that the PCMCIA is OK, the fault could be in the DDC.
  Check that the DDC has auxiliary power switched on (see the drive commissioning manual).
  If an APC application controller is connected to the DDC and it is able to control it, the communication circuits in SNAT 601/609 TAI or SDCS-COM-1 are OK. The fault then could be in the fibre optic receiver, in the optical cable or transmitter circuits of SNAT 601/609 TAI or SDCS-COM-1. In this case, replace SNAT 601/609 TAI or SDCS-COM-1.
  If the APC cannot control the DDC, in the case of an ACV 700 the fault could be in SNAT 601/609 TAI or SNAT 603 CNT or in the case of a DC drive in SDCS-COM-1 or SDCS-CON-1.

Installing the PCMCIA

Turn your PC off.

Insert the PCMCIA card into a vacant PCMCIA slot (text side up). Connect the plastic box to the PCMCIA card (if it is not connected).

Turn the PC on. Make sure that the PCMCIA support software (Card Services and Socket Services) of your PC starts during startup.

IMPORTANT:

- **Never insert or remove the PCMCIA card and the plastic box when the DDCTool is running.**
- **Make sure that the power cord of the PC is always plugged into a live AC outlet when you use the DDCTool program.**
- **If your PC includes a feature that switches the power of the PC off when the PC is idle, then set this feature off.**

Installing the cable between the PCMCIA and the DDC

See Figure 3 - 9 and Chapter *Installing the cable between the DDCTool board and the DDC*.

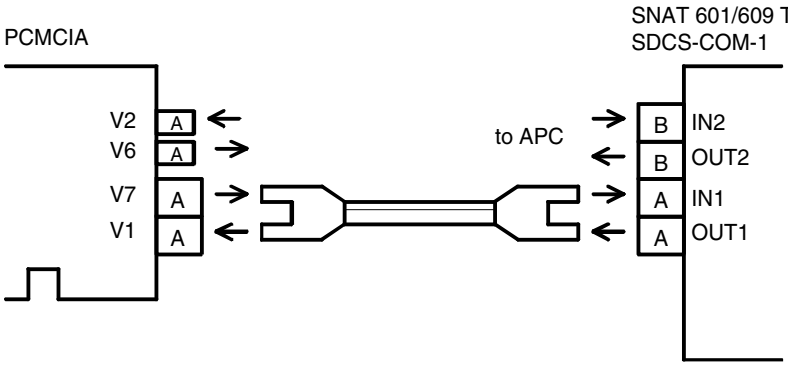

Figure 3 - 9. Connection between the PCMCIA and the target system.

Connecting the PCMCIA to multiple DDCs

See Chapter *Connecting the DDCTool board to multiple DDCs*.

If the CHECK622 program detects an error then the program displays one of the following error messages:

```
ERROR: PCMCIA Card Services not installed
```

Your PC does not have a PCMCIA support software or the program cannot detect it. Install and/or start the PCMCIA support software as described in the documentation included with the support package.

```
ERROR: SNAT 622 CMT not found
```

You have not inserted the PCMCIA card into your PC or the connector between the flat PCMCIA card and the plastic box is not OK or the program cannot detect the card.

```
ERROR: SNAT 622 CMT is invalid
```

The PCMCIA card is not working correctly. The most probable reason is the faulty connector between the flat PCMCIA card and the plastic box. Check it once more.

- If the test program has checked that the PCMCIA is OK but the DDCTool does not start correctly, the fault could be in the DDC. Check that the DDC has auxiliary power switched on (see the drive commissioning manual).
  If an APC application controller is connected to the DDC and it is able to control it, the communication circuits in SNAT 601/609 TAI or SDCS-COM-1 are OK. The fault then could be in the fibre optic receiver, in the optical cable or transmitter circuits of SNAT 601/609 TAI or SDCS-COM-1. In this case, replace SNAT 601/609 TAI or SDCS-COM-1.
  If the APC cannot control the DDC, in the case of an ACV 700 the fault could be in SNAT 601/609 TAI or SNAT 603 CNT or in the case of a DC drive in SDCS-COM-1 or SDCS-CON-1.