This product is obsolete.

OPTO 22

DATA SHEET

Form 787-231205

BRAINS
SNAP
ANALOG AND DIGITAL

Part Number	Description
B3000	SNAP Analog/Digital Brain Mistic/Optomux Protocol

Features

***** This product is Obsolete and no longer available. *****

- Convenient pluggable connector for removable top-mounted field wiring.
- Ready access to standard fuses.
- Versatile DIN-rail or panel mounting.
- Single distributed brain does it all - analog, digital, or mixed I/O.
- Highly visible LED status indicator for each channel.
- Digital I/O (four channels per module).
- Mix analog and digital modules on the same rack.
- Software-configurable, dual-channel, intelligent analog I/O.
- Quick and easy installation - modules "SNAP" securely on racks; no screws required.

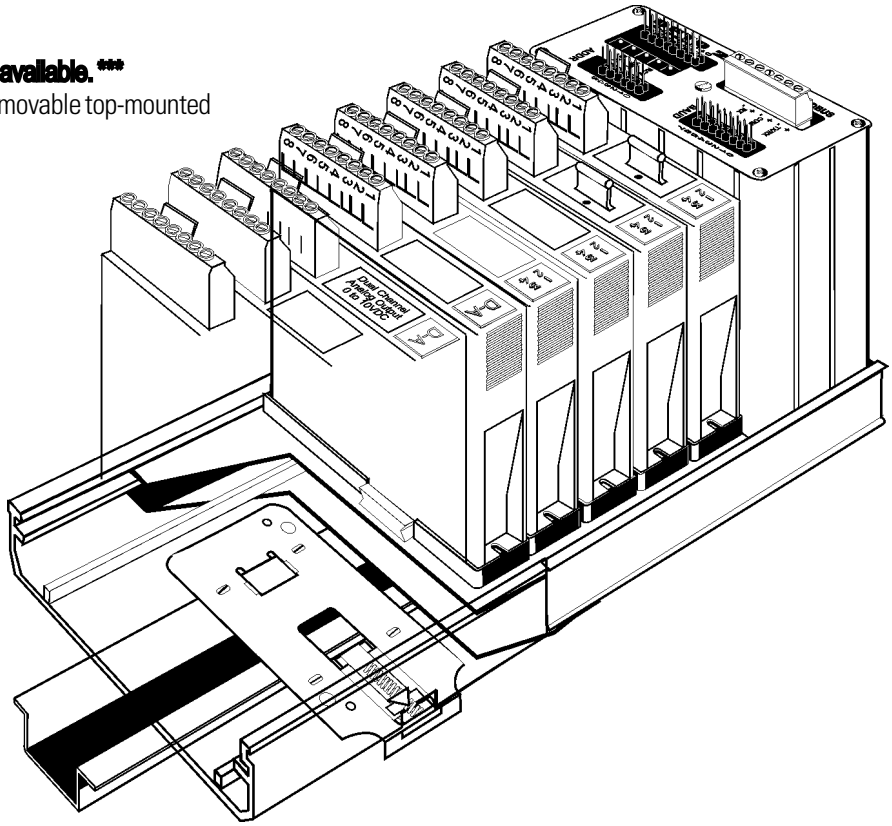

Description

*** This product is Obsolete and no longer available. ***

The B3000 is a high-performance brain used to remotely control a mix of both analog and digital I/O modules using Opto 22's SNAP "B Series" I/O mounting racks. The B3000 can be used with either an Opto 22 controller or a host computer. On-board intelligence enables many distributed control functions.

Since SNAP analog and digital modules have the same footprint, the B3000 brain can be combined with SNAP "B Series" racks to provide a powerful I/O handling system. Please note that some newer SNAP modules are not compatible with the B3000 brain. See the module's data sheet for compatibility information.

The B3000 communicates with a host processor serially over RS-485 twisted-pair wiring and supports both the *mistic*® protocol and the industry-standard Optomux® protocol. Both protocols can support high-speed communication (115 Kbaud).

Utilizing the mistic protocol, advanced I/O processing—including PID calculations (100 millisecond update), pulse width duration measurements (100 microsecond resolution), and high-speed counting (20,000 Hz)—can all be accomplished on separate channels of the same I/O mounting rack. See page 3 for a complete list of mistic functions.

Opto 22 • 43044 Business Park Drive • Temecula, CA 92590-3614 • Phone: (951) 695-3000 • (800) 321-OPTO • Fax: (951) 695-3095 •

Inside Sales: (800) 321-OPTO • Product Support: (800) TEK-OPTO • (951) 695-3080 • Fax: (951) 695-3017 • Email: sales@opto22.com

© 2004–2008 Opto 22. All rights reserved. All trademarks, trade names, logos, and service marks referenced herein belong to their respective companies.

This product is obsolete.

In addition to providing input and output capability, the Optomux protocol also has the ability to perform count, latch, and pulse duration on digital input channels, as well as frequency and pulse functions on digital outputs. The Optomux protocol is also capable of providing input averaging and output waveform functions on analog channels. See page 4 for a complete list of Optomux functions.

The B3000 is compatible with the classic B1 and B2 brains, with a few exceptions. The B3000 adds the ability to communicate with either a 2-wire or 4-wire configuration, at speeds of 115 Kbaud. Classic brains were restricted to 4-wire communications at up to 38.4 Kbaud. The B3000 supports only the standard 2-pass method of communication with the Optomux protocol.

By using the B3000 with the mistic protocol and a mistic controller, SNAP I/O customers can use FactoryFloor®, Opto 22's suite of Windows® software. FactoryFloor consists of four integrated components:

- OptoControl™, a graphical, flowchart-based development environment for control solutions
- OptoDisplay™, a graphical, multimedia operator interface package
- OptoServer™, a robust data server that connects the controller network with the PC-based FactoryFloor network.
- Plus OptoConnect™, a drag-and-drop database utility for building SQL Server and Access databases.

OptoControl is the programming environment for Opto 22's FactoryFloor software. OptoControl utilizes the distributed control capability of the B3000 brain.

Opto 22's OptoDriver Toolkit™ can be used for direct communications from a host PC to the B3000. The toolkit includes 32-bit and 16-bit Windows drivers and Opto 22's classic DOS drivers. The kit also provides the files, documentation, and real-world examples needed to write Microsoft® Windows and DOS software applications. Programmers can access the Opto 22 I/O hardware using languages such as Microsoft Visual C++™ or Microsoft Visual Basic®.

Please note: FactoryFloor is a legacy product. The newer PAC Project Professional software suite supports B3000 brains with SNAP PAC S-series programmable automation controllers. See our website information about PAC Project Professional.

© 2004–2008 Opto 22. All rights reserved. All trademarks, trade names, logos, and service marks referenced herein belong to their respective companies.

This product is obsolete.

B3000 Mistic System Architecture

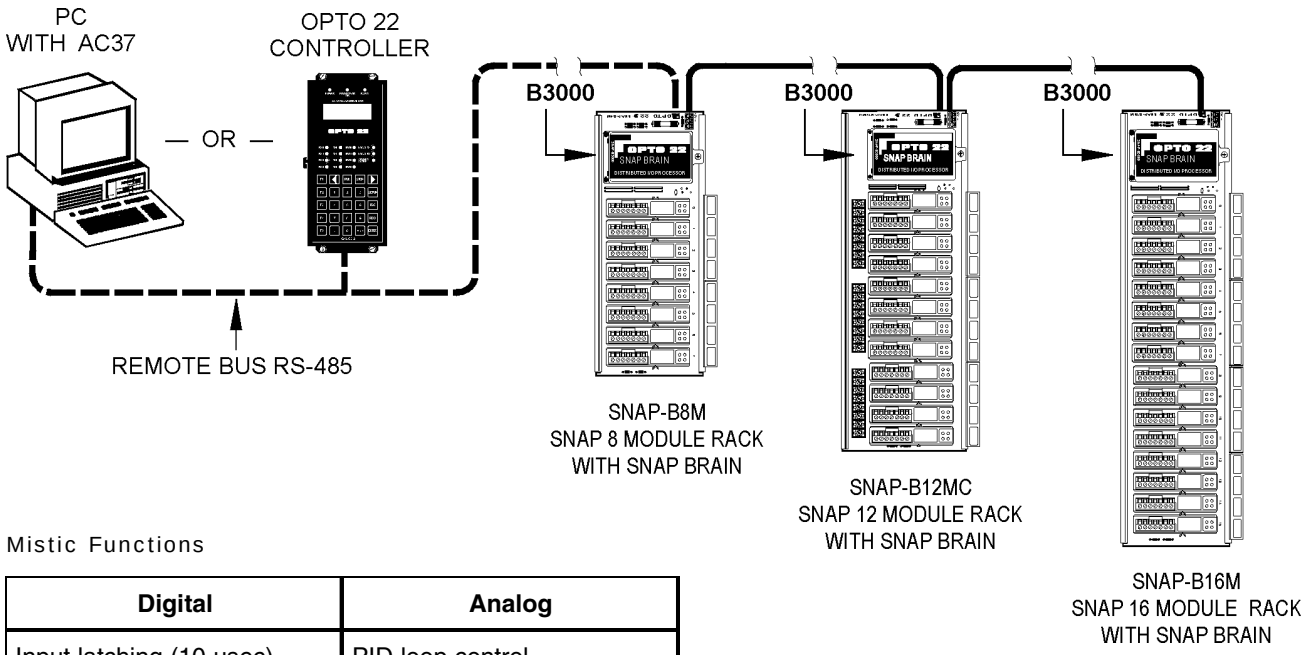

Mistic Functions

Digital	Analog
Input latching (10 µsec)	PID loop control
Timing (1 msec resolution)	High/Low limit monitoring
Counting (32 bit)	Thermocouple linearization
Totalizing	Digital filtering
Output timing (1 msec resolution)	Ramping
Pulse generation (1 msec resolution)	Waveform generation
Time proportional output (100 msec minimum period)	Programable offset and gain
Frequency measurement (up to 20 Khz)	Engineering unit scaling
Event reactions	Square root extraction
Pulse measurment	Event reactions
Period measurement	

Notes:
1. PID loops do not cross address boundaries.
2. PID loops can only be configured on analog addresses. There is a maximum of 8 PID loops per analog address.
3. Event reactions do not cross address boundaries.

Opto 22 • 43044 Business Park Drive • Temecula, CA 92590-3614 • Phone: (951) 695-3000 • (800) 321-OPTO • Fax: (951) 695-3095 •
Inside Sales: (800) 321-OPTO • Product Support: (800) TEK-OPTO • (951) 695-3080 • Fax: (951) 695-3017 • Email: sales@opto22.com

© 2004–2008 Opto 22. All rights reserved. All trademarks, trade names, logos, and service marks referenced herein belong to their respective companies.