3300 XL 8 mm Proximity Transducer System

Datasheet

Cordant™

141194 Rev. AN



Description

The 3300 XL 8 mm Proximity Transducer System consists of:

- One 3300 XL 8 mm probe,
- One 3300 XL extension cable[1], and
- One 3300 XL Proximitor Sensor[2].

The system provides an output voltage that is directly proportional to the distance between the probe tip and the observed conductive surface and can measure both static (position) and dynamic (vibration) values. The system's primary applications are vibration and position measurements on fluid-film bearing machines, as well as Keyphasor reference and speed measurements[3].

The 3300 XL 8 mm system delivers the most advanced performance in our eddy current proximity transducer systems. The standard 3300 XL 8 mm 5-meter system also fully complies with the American Petroleum Institute's (API) 670 Standard for mechanical configuration, linear range, accuracy, and temperature stability. All 3300 XL 8 mm proximity transducer systems provide this level of performance and support complete interchangeability of probes, extension cables, and Proximitor sensors, eliminating the need to match or bench calibrate individual components.

Each 3300 XL 8 mm Transducer System component is backward compatible and interchangeable[4] with other non-XL 3300 series 5 mm and 8 mm transducer system components[5]. This compatibility includes the 3300 5 mm probe, for applications in which an 8 mm probe is too large for the available mounting space[6,7].

Baker Hughes

Specifications

Unless otherwise noted, the following specifications are for a 3300 XL 8 mm Proximitor Sensor, extension cable and 8 mm probe between +18°C and +27°C (+64°F to +80°F) at a maximum altitude of 2000 meters, with a -24 Vdc power supply, a 10 kΩ load, an AISI 4140 steel target, and a probe gapped at 1.27 mm (50 mils). Performance characteristics apply to systems that consist solely of 3300 XL 8 mm components. The system accuracy and interchangeability specifications do not apply to transducer systems that are calibrated to any target other than our AISI 4140 steel target.

Electrical

Proximitor Sensor Input	Accepts one non-contacting 3300-series 5 mm, 3300 XL 8 mm Proximity Probe and Extension Cable.
Power	Requires -17.5 Vdc to -26 Vdc when installed with non-incendive circuit connected per installation drawing 140979 at 12 mA maximum consumption, -23 Vdc to -26 Vdc with barriers. Operation at a more positive voltage than -23.5 Vdc can result in reduced linear range.
Supply Sensitivity	Less than 2 mV change in output voltage per volt change in input voltage.
Output Resistance	50 Ω

Nominal Probe DC Resistance	
Resistance (R_{PROBE}) from Center Conductor to Outer Conductor	
Probe Length (m)	**R_{PROBE}(Ω)**
0.5	7.45 ± 0.50
1.0	7.59 ± 0.50
1.5	7.73 ± 0.50
2.0	7.88 ± 0.50
3.0	8.17 ± 0.50
5.0	8.73 ± 0.50
9.0	9.87 ± 0.50

Nominal Extension Cable DC Resistance	
Resistance (R_{CORE}) from Center Conductor to Center Conductor	
Length of Extension Cable (m)	**RCORE (Ω)**
3.0	0.66 ± 0.10
3.5	0.77 ± 0.12
4.0	0.88 ± 0.13
4.5	0.99 ± 0.15
6.0	1.32 ± 0.21
7.0	1.54 ± 0.23
7.5	1.65 ± 0.25
8.0	1.76 ± 0.26
8.5	1.87 ± 0.28

Resistance (R_{JACKET}) from Outer Conductor to Outer Conductor	
Length of Extension Cable (m)	**R_{JACKET} (Ω)**
3.0	0.20 ± 0.04
3.5	0.23 ± 0.05
4.0	0.26 ± 0.05
4.5	0.30 ± 0.06
6.0	0.39 ± 0.08
7.0	0.46 ± 0.09
7.5	0.49 ± 0.10
8.0	0.53 ± 0.11
8.5	0.56 ± 0.11

Extension Cable Capacitance	69.9 pF/m (21.3 pF/ft) typical
Field Wiring	0.2 to 1.5 mm² (16 to 24 AWG). Recommend using 3 conductor shielded triad cable and tinned field wiring. Maximum length of 305 meters (1,000 feet) between the 3300 XL Proximitor Sensor and the monitor. See the frequency response graphs, Figures 10 and 12, for signal rolloff at high frequencies when using longer field wiring lengths.
Linear Range	2 mm (80 mils). Linear range begins at approximately 0.25 mm (10 mils) from target and is from 0.25 to 2.3 mm (10 to 90 mils) (approximately –1 to –17 Vdc).
Recommended Gap Setting for Radial Vibration	-9 Vdc [approximately 1.27 mm (50 mils)]
Incremental Scale Factor (ISF)	
Standard 5 or 1 meter System	7.87 V/mm (200 mV/mil) ± 5% including interchangeability error when measured in increments of 0.25 mm (10 mils) over the 80 mil linear range from 0°C to +45°C (+32°F to +113°F).
Standard 9 meter System	7.87 V/mm (200 mV/mil) ± 6.5% including interchangeability error when measured in increments of 0.25 mm (10 mils) over the 80 mil linear range from 0°C to +45°C (+32°F to +113°F).
Extended Temperature Range (ETR) for 5 and 9 Meter Systems	7.87 V/mm (200 mV/mil) ± 6.5% including interchangeability error when measured in increments of 0.25 mm (10 mils) over the 80 mil linear range from 0°C to +45°C (+32°F to +113°F).
Deviation from best fit straight line (DSL)	
Standard 5 or 1 meter System	Less than ±0.025 mm (±1 mil) with components at 0°C to +45°C (+32°F to +113°F).
Standard 9 meter System	Less than ±0.038 mm (±1.5 mil) with components at 0°C to +45°C (+32°F to +113°F).
Extended Temperature Range 5 and 9 meter Systems	Less than ±0.038 mm (±1.5 mil) with components at 0°C to +45°C (+32°F to +113°F).

Effects of 60 Hz Magnetic Fields Up to 300 Gauss				
Output Voltage in Mil pp/Gauss				
Gap	5 or 1-meter Proximitor Sensor	9 meter Proximitor Sensor	Probe	Ext. Cable
10	0.0119	0.0247	0.0004	0.0004
50	0.0131	0.0323	0.0014	0.0014
90	0.0133	0.0348	0.0045	0.0045

Mechanical

Probe Tip Material	Polyphenylene sulfide (PPS).
Probe Case Material	AISI 303 or 304 stainless steel (SST).
Probe Cable Specifications	
Standard cable	75Ω triaxial, fluoroethylene propylene (FEP) insulated probe cable in the following total probe lengths: 0.5, 1, 1.5, 2, 3, 5, or 9 meters.
Extended Temperature Range cable	75Ω triaxial, perfluoroalkoxy (PFA) insulated probe cable in the following total probe lengths: 0.5, 1, 1.5, 2, 5, or 9 meters.
Armor (optional on both)	Flexible AISI 302 or 304 SST with FEP outer jacket.
Tensile Strength (Maximum Rated)	330 N (75 lbf) probe case to probe lead. 270 N (60 lbf) at probe lead to extension cable connectors.
Connector Material	Gold-plated brass or gold-plated beryllium copper.

Probe Case Torque		
Probe Type	**Maximum Rated**	**Recommended**
Standard forward mounted probes	33.9 N•m (300 in•lbf)	11.2 N•m (100 in•lbf)
Standard forward-mount probes - first three threads	22.6 N•m (200 in•lbf)	7.5 N•m (66 in•lbf)
Reverse-mount probes	22.6 N•m (200 in•lbf)	7.5 N•m (66 in•lbf)
Extension Cable Material		
Standard cable	75 Q triaxial, fluoroethylene propylene (FEP) insulated	
Extended Temperature Range cable	75Ω triaxial, perfluoroalkoxy (PFA) insulated.	
Minimum Cable Bend Radius	25.4 mm (1.0 in)	

3300 XL 8 mm components are both electrically and physically interchangeable with non-XL 3300 5 mm and 8 mm components when minimum permissible cable bend radius is observed.

Connector Material	Gold-plated brass or gold-plated beryllium copper.
Maximum Connector Torque	0.565 N•m (5 in•lbf)

Connector-to-Connector Recommended Torque	
Connector Type	**Tightening Instructions**
Two 3300 XL gold "click" type connectors	Finger tight
One non-XL stainless steel connector and one 3300 XL connector	Finger tight plus 1/8 turn using pliers
Materials	
Proximitor Sensor Material	A308 aluminum
Connector Material	Gold-plated brass or gold-plated beryllium copper.
Length	
System Length	5 or 9 meters (including extension cable) or 1 meter (probe only).
Weight	
Total System Weight (Typical)	0.7 kg (1.5 lb m)
Probe	323 g/m (11.4 oz)
Extension Cable	34 g/m (0.4 oz/ft)
Armored Extension Cable	103 g/m (1.5 oz/ft)
Proximitor Sensor	246 g (8.67 oz)

Thread Engagement Limits

Probe Case Thread	Maximum Length of Thread Engagement
3/8-24	0.563 in
M10x1	15 mm

Maximum thread engagement lengths are per the industry standard of 1.5 times the nominal thread diameter. A fit class matching that of the external probe thread is assumed for all internal threads. Applications with thread engagement lengths exceeding the values in the table above may exhibit binding during installation. Contact your Bently Nevada representative if you require probe thread engagement lengths exceeding the values above. Bently Nevada does not replace proximity probes under warranty due to excessive thread engagement lengths.

330101-00-08-05-02-00, 330101-00-08-05-02-05, 330101-00-08-10-02-00, 330101-00-08-10-02-05, 330101-00-12-10-02-00, 330101-00-12-10-02-05, 330101-00-16-10-02-00, 330101-00-16-10-02-05, 330101-00-20-05-02-00, 330101-00-20-10-02-00, 330101-00-20-10-02-05, 330101-00-30-10-02-00, 330101-00-30-10-02-05, 330101-00-40-05-02-00, 330101-00-40-10-02-00, 330101-00-40-10-02-05, 330101-00-60-10-02-00, 330101-00-60-10-02-05, 330102-00-20-10-02-00, 330103-00-02-10-02-05, 330103-00-04-10-02-00, 330103-00-05-10-02-00, 330104-00-06-10-02-00, 330104-01-05-50-02-00, 330105-02-12-05-02-00, 330105-02-12-05-02-05, 330105-02-12-10-02-00, 330105-02-12-10-02-05, 330106-05-30-05-02-00, 330106-05-30-05-02-05, 330106-05-30-10-02-00, 330106-05-30-10-02-05.

Ordering Information for Proximitor Sensor

3300 XL Proximitor Sensor

330180-AA-BB

A: Total Length and Mounting Option	
10	1.0 meter (3.3 feet) system length, panel mount
11	1.0 meter (3.3 feet) system length, DIN mount
12	1.0 meter (3.3 feet) system length, no mounting hardware
50	5.0 meters (16.4 feet) system length, panel mount
51	5.0 meters (16.4 feet) system length, DIN mount
52	5.0 meters (16.4 feet) system length, no mounting hardware
90	9.0 meters (29.5 feet) system length, panel mount
91	9.0 meters (29.5 feet) system length, DIN mount
92	9.0 meters (29.5 feet) system length, no mounting hardware
B: Agency Approval Option	
00	Not required
05	CSA, ATEX, IECEx Approvals

Ordering Information for Extension Cables

3300 XL Standard Extension Cable

330130-AAA-BB-CC

Make sure that the extension cable length and the probe length, when added together, equal the Proximitor Sensor total length.

A: Cable Length Option	
030	3.0 meters (9.8 feet)
035	3.5 meters (13.1 feet)
040	4.0 meters (11.5 feet)
045	4.5 meters (14.8 feet)
060	6.0 meters (19.7 feet)
070	7.0 meters (22.9 feet)
075	7.5 meters (24.6 feet)
080	8.0 meters (26.2 feet)
085	8.5 meters (27.9 feet)
B: Connector Protector and Cable Option	
00	Standard cable
01	Armored cable
02	Standard cable with connector protector

03	Armored cable with connector protector
10	FluidLoc cable
11	Armored FluidLoc cable
12	FluidLoc cable with connector protector
13	Armored FluidLoc cable with connector protector
C: Agency Approval Option	
00	Not required
05	CSA, ATEX, IECEx Approvals

3300 XL Extended Temperature Range (ETR) Extension Cable

330190-AAA-BB-CC

Make sure that the extension cable length and the probe length, when added together, equal the Proximitor Sensor total length.

A: Cable Length Option	
030	3.0 meters (9.8 feet)
035	3.5 meters (13.1 feet)
040	4.0 meters (11.5 feet)
045	4.5 meters (14.8 feet)
070	7.0 meters (22.9 feet)
075	7.5 meters (24.6 feet)
080	8.0 meters (26.2 feet)
085	8.5 meters (27.9 feet)
B: Cable Option	
00	Standard cable
01	Armored cable
C: Agency Approval Option	
00	Not required
05	CSA, ATEX, IECEx Approvals

Accessories

141078	3300 XL 8 mm and 3300 5 mm Proximity Transducer System Manual.
175751	3300 XL Multi-Purpose Stainless Steel Housing. 12”x12”x6”. Can hold up to 8 Proximitor Sensors in a DIN-mount configuration or 6 Proximitor Sensors in a panel-mount configuration. (Available with ATEX/IECEx Zone 2 type << u >> certifications).
176467	3300 XL Multi-Purpose Stainless Steel Housing. 12”x8”x6”. Can hold up to 4 3300XL Proximitor Sensors in both DIN-mount and panel-mount configurations. (Available with ATEX/IECEx Zone 2 type << u >> certifications).
330181	3300 XL Multi-Purpose Stainless Steel Housing. 13”x9.5”x7”. Can hold up to 8 Proximitor sensors in a DIN-mount configuration or 6 Proximitor Sensors in a panel-mount configuration. Primarily used by customers requiring hazardous area approvals fro their installations. Available with North American type 4x certification suitable for installation in Div 2.
02120015	Bulk field wire. 1.0 mm2 (18 AWG), 3 conductor, twisted, shielded cable with drain wire. Specify length in feet.
138492-01	Replacement panel-mount mounting pad.
138493-01	Replacement DIN-mount mounting pad.

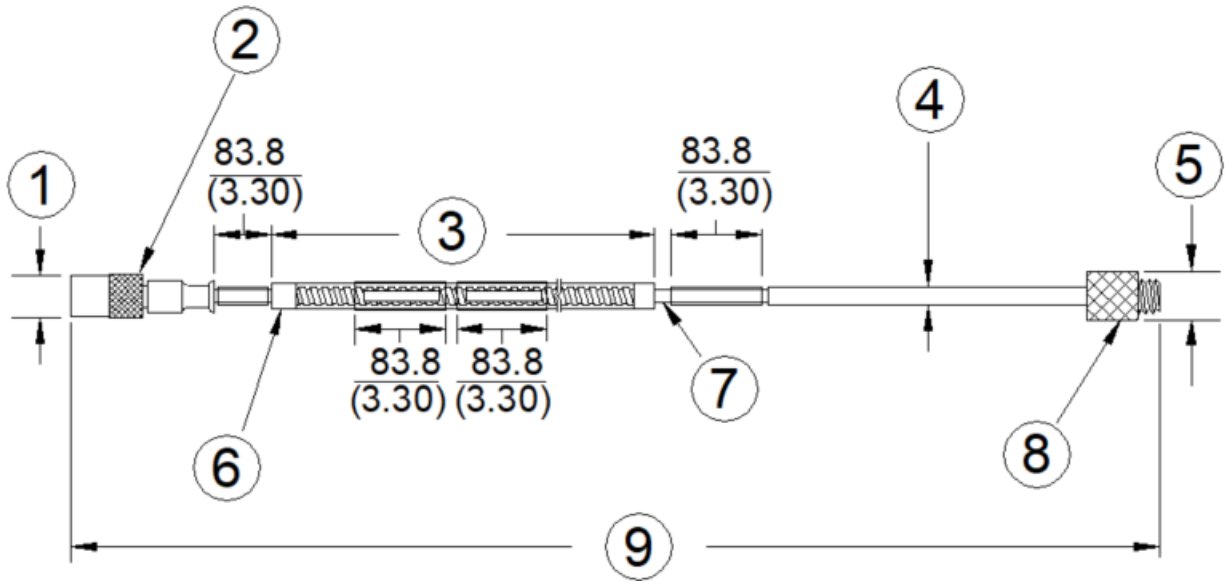

1. 7.24 mm (0.285 in) maximum diameter
2. Miniature male coaxial connector
3. FEP or PFA coated armor, armor length 300 mm (11.8 in) less than cable length (see Note 6)
4. 75Ω cable, 3.7 mm (0.15 in) maximum outside diameter, 3.94 mm (0.155 in) maximum diameter for FluidLoc cable, 7.67 mm (0.302 in) maximum outside diameter of armor, 10.2 mm (0.40 in) maximum diameter of armor ferrule
5. 7.24 mm (0.285 in) maximum diameter
6. Stainless steel ferrules, 10.2 mm (0.40 in) max diameter
7. FEP or PFA insulated triaxial cable
8. Miniature female coaxial connector
9. Cable length, +20%, -0%

Figure 17: Extension Cable without Connector Protectors

330130, 3300 XL Extension Cable (FEP Armor and Insulation)

330190, 3300 XL ETR Extension Cable (PFA Armor and Insulation)