3300 XL 8 mm Proximity Transducer System

Datasheet

Cordant™

141194 Rev. AN



Description

The 3300 XL 8 mm Proximity Transducer System consists of:

- One 3300 XL 8 mm probe,
- One 3300 XL extension cable[1], and
- One 3300 XL Proximitor Sensor[2].

The system provides an output voltage that is directly proportional to the distance between the probe tip and the observed conductive surface and can measure both static (position) and dynamic (vibration) values. The system's primary applications are vibration and position measurements on fluid-film bearing machines, as well as Keyphasor reference and speed measurements[3].

The 3300 XL 8 mm system delivers the most advanced performance in our eddy current proximity transducer systems. The standard 3300 XL 8 mm 5-meter system also fully complies with the American Petroleum Institute's (API) 670 Standard for mechanical configuration, linear range, accuracy, and temperature stability. All 3300 XL 8 mm proximity transducer systems provide this level of performance and support complete interchangeability of probes, extension cables, and Proximitor sensors, eliminating the need to match or bench calibrate individual components.

Each 3300 XL 8 mm Transducer System component is backward compatible and interchangeable[4] with other non-XL 3300 series 5 mm and 8 mm transducer system components[5]. This compatibility includes the 3300 5 mm probe, for applications in which an 8 mm probe is too large for the available mounting space[6,7].

Baker Hughes

Specifications

Unless otherwise noted, the following specifications are for a 3300 XL 8 mm Proximitor Sensor, extension cable and 8 mm probe between +18°C and +27°C (+64°F to +80°F) at a maximum altitude of 2000 meters, with a -24 Vdc power supply, a 10 kΩ load, an AISI 4140 steel target, and a probe gapped at 1.27 mm (50 mils). Performance characteristics apply to systems that consist solely of 3300 XL 8 mm components. The system accuracy and interchangeability specifications do not apply to transducer systems that are calibrated to any target other than our AISI 4140 steel target.

Electrical

Proximitor Sensor Input	Accepts one non-contacting 3300-series 5 mm, 3300 XL 8 mm Proximity Probe and Extension Cable.
Power	Requires -17.5 Vdc to -26 Vdc when installed with non-incendive circuit connected per installation drawing 140979 at 12 mA maximum consumption, -23 Vdc to -26 Vdc with barriers. Operation at a more positive voltage than -23.5 Vdc can result in reduced linear range.
Supply Sensitivity	Less than 2 mV change in output voltage per volt change in input voltage.
Output Resistance	50 Ω

Nominal Probe DC Resistance	
Resistance (R_{PROBE}) from Center Conductor to Outer Conductor	
Probe Length (m)	**R_{PROBE}(Ω)**
0.5	7.45 ± 0.50
1.0	7.59 ± 0.50
1.5	7.73 ± 0.50
2.0	7.88 ± 0.50
3.0	8.17 ± 0.50
5.0	8.73 ± 0.50
9.0	9.87 ± 0.50

Nominal Extension Cable DC Resistance	
Resistance (R_{CORE}) from Center Conductor to Center Conductor	
Length of Extension Cable (m)	**RCORE (Ω)**
3.0	0.66 ± 0.10
3.5	0.77 ± 0.12
4.0	0.88 ± 0.13
4.5	0.99 ± 0.15
6.0	1.32 ± 0.21
7.0	1.54 ± 0.23
7.5	1.65 ± 0.25
8.0	1.76 ± 0.26
8.5	1.87 ± 0.28

Connector-to-Connector Recommended Torque	
Connector Type	**Tightening Instructions**
Two 3300 XL gold "click" type connectors	Finger tight
One non-XL stainless steel connector and one 3300 XL connector	Finger tight plus 1/8 turn using pliers
Materials	
Proximitor Sensor Material	A308 aluminum
Connector Material	Gold-plated brass or gold-plated beryllium copper.
Length	
System Length	5 or 9 meters (including extension cable) or 1 meter (probe only).
Weight	
Total System Weight (Typical)	0.7 kg (1.5 lb m)
Probe	323 g/m (11.4 oz)
Extension Cable	34 g/m (0.4 oz/ft)
Armored Extension Cable	103 g/m (1.5 oz/ft)
Proximitor Sensor	246 g (8.67 oz)

Thread Engagement Limits

Probe Case Thread	Maximum Length of Thread Engagement
3/8-24	0.563 in
M10x1	15 mm

Maximum thread engagement lengths are per the industry standard of 1.5 times the nominal thread diameter. A fit class matching that of the external probe thread is assumed for all internal threads. Applications with thread engagement lengths exceeding the values in the table above may exhibit binding during installation. Contact your Bently Nevada representative if you require probe thread engagement lengths exceeding the values above. Bently Nevada does not replace proximity probes under warranty due to excessive thread engagement lengths.

Environmental Limits

Probe Temperature Range	
Operating and Storage Temperature	
Standard Probe	-52°C to +177°C (-62°F to +350°F)
Extended Temperature Range Probe	-52°C to +218°C (-62°F to +425°F) for the probe tip; -51°C to +260°C (-60°F to +500°F) for the probe cable and connector.

Exposing the probe to temperatures below –34˚C (-30˚F) may cause premature failure of the pressure seal.

Probe Pressure
3300 XL 8 mm probes are designed to seal differential pressure between the probe tip and case. The probe sealing material consists of a Viton® O ring. Probes are not pressure tested prior to shipment. Contact our custom design department if you require a test of the pressure seal for your application.

It is the responsibility of the customer or user to ensure that all liquids and gases are contained and safely controlled should leakage occur from a proximity probe. In addition, solutions with high or low pH values may erode the tip assembly of the probe causing media leakage into surrounding areas. Bently Nevada does not be held responsible for any damages resulting from leaking 3300 XL 8 mm proximity probes. In addition, 3300 XL 8 mm proximity probes does not be replaced under the service plan due to probe leakage.

Extension Cable Temperature Range	
Operating and Storage Temperature	
Standard Cable	-52°C to +177°C (-62°F to +350°F)
Extended Temperature Range Cable	-52°C to +260°C (-62°F to +500°F)

Proximitor Sensor Temperature Range	
Operating Temperature	-52°C to +100°C (-62°F to +212°F)
Storage Temperature	-52°C to +105°C (-62°F to +221°F)

Probe Relative Humidity
Less than a 3% change in Average Scale Factor (ASF) when tested in 93% humidity in accordance with IEC standard 68 2 3 for up to 56 days.

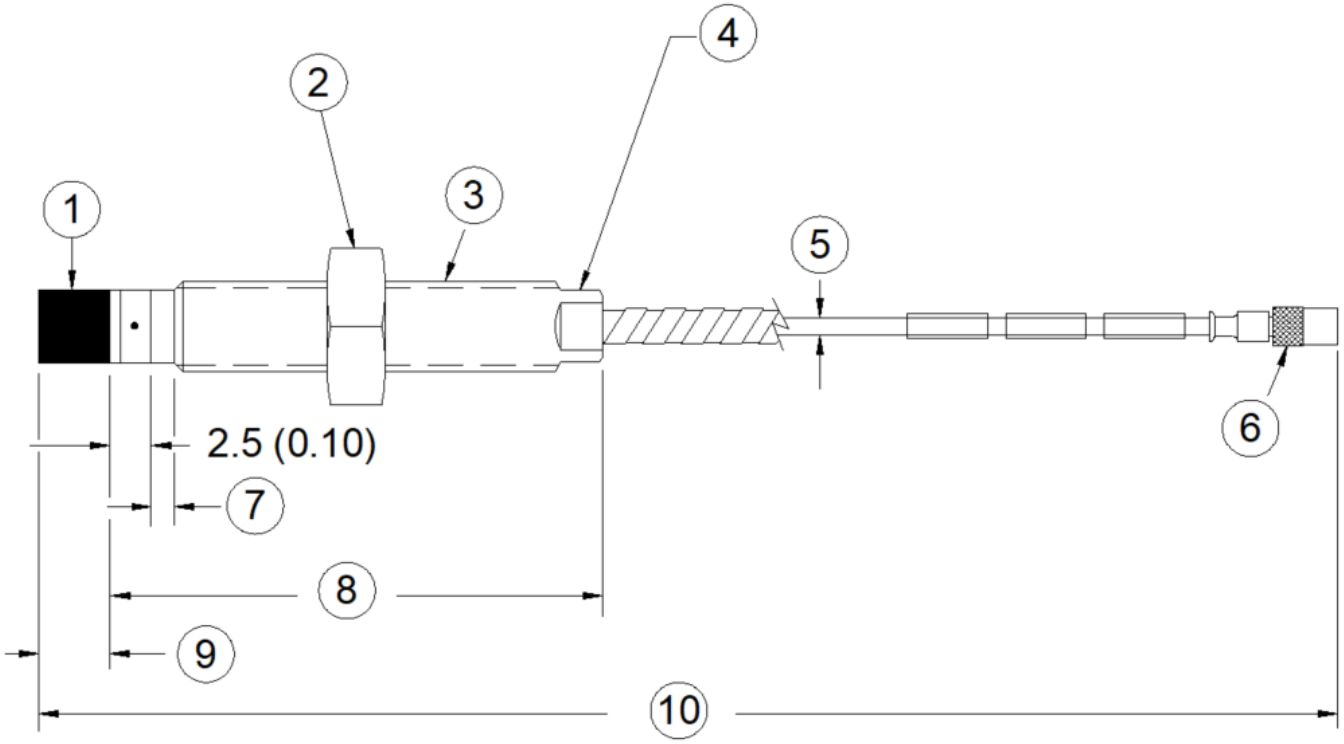

1. Probe tip, 8.0 mm (0.31 in) diameter
2. 9/16 in for 3/8-24 threads, M17 for M10 threads (see Note 2)
3. Case thread
4. 5/16 in wrench flats for 3/8-24 threads; 8mm wrench flats for M10 threads.
5. 75 Ω cable, 3.68 mm (0.145 in) maximum outside diameter, 3.94 mm (0.155 in) maximum outside diameter for FluidLoc cable, 7.67 mm (0.302 in) outside diameter of armor, 9.5 mm (0.38 in) maximum diameter of armor ferrule
6. Miniature male coaxial connector, 7.24 mm (0.285 in) maximum outside diameter “D”
7. Unthreaded length “A”
8. Case length “B”
9. 6.0 mm (0.235 in) maximum
10. Total length “C”, +30%, -0%[3]

Figure 14: 3300 XL 8 mm Proximity Probes, Standard Mount

330101 and 330191, 3/8-24 UNF-2A, without armor [7]

330102 and 330192, 3/8-24 UNF-2A, with armor [6]

330103 and 330193, M10X1 thread, without armor [7]

330104 and 330194, M10X1 thread, with armor [6]