● **Current/Voltage I/O Modules (Non-Isolated)**

These modules provide 8 inputs and 8 outputs to support up to 8 loops. They can be used in dual-redundant configuration.

Items		Specifications					
Model		**AAI841 (*1)**		**AAB841 (*5)**		**AAB842 (*5) (*6)**	
Number of I/O channels		8-channel input/8-channel output, non-isolated		8-channel input/8-channel output, non-isolated (differential input)		8-channel input/8-channel output, non-isolated When the voltage input is selected the differential input is applied.	
I/O signal		Input: 4 to 20 mA	Output: 4 to 20 mA	Input: 1 to 5 V (allowable common mode voltage ±1 V or less)	Output: 4 to 20 mA	Input (*7) Voltage input: 1 to 5 V DC (allowable common mode voltage ±1 V or less) Current input: 4 to 20 mA DC	Output: 4 to 20 mA
Allowable input current/ voltage		25 mA	—	±7.5 V	—	Voltage input : ±7.5 V Current input : 25 mA	—
Withstanding voltage		—					
Input resistance	**Power ON**	400 Ω (at 20 mA) to 1000 Ω (at 4 mA) (*2)	—	1 MΩ or larger	—	Voltage input: 1 MΩ or larger Current input: 290 Ω (at 20 mA) to 450 Ω (at 4 mA) (*2)	—
	Power OFF	500 kΩ or larger	—	340 kΩ or larger	—	Voltage input: 340 kΩ or larger Current input: 500 kΩ or larger	—
Allowable load resistance		—	0 to 750 Ω (*3)	—	0 to 750 Ω	—	0 to 750 Ω (*4)
Circuit-open detection		—	Less than 0.65 mA	—	Less than 0.65 mA	—	Less than 0.65 mA
Accuracy		Input: ±16 μA	output: ±48 μA	Input: ±4 mV	output: ±48 μA	Voltage input : ±4 mV Current input : ±16 μA	±48 μA
Data update period		10 ms					
Input step response time		100 ms					
Output step response time		40 ms					
Transmitter power supply		14.8 V or higher (at 20 mA) 26.4 V or less (at 0 mA) (*4)		—			
Setting of 2-wire or 4-wire transmitter		For each channel by setting pin		—			
Temperature drift		±0.1 %/10 °C					
Maximum current consumption		310 mA (5 V DC), 500 mA (24 V DC)		310 mA (5 V DC), 250 mA (24 V DC)		410 mA (5 V DC), 290 mA (24 V DC)	
Weight		0.3 kg					
External connection		Pressure clamp terminal, KS cable, MIL connector cable				KS cable	
HART communication (*8)		Available		—		Available (at Current input and output)	

*1: A Zener barrier is not allowed to be connected with this module. Use an isolation barrier when the module is used in intrinsically safe application.

*2: The module input resistance viewed from the terminals depends on the current strength as calculated as below:

$$250\ \Omega + \frac{\text{voltage drop in the input protection circuit}}{\text{current value}}$$

F03E.ai

*3: When this module is used in the ambient temperature of 60 to 70 ºC by being installed in a node unit that conforms to the temperature environment, the allowable load resistance is 200 to 750 Ω.

*4: This voltage is generated between the connecting terminals for 2-wire transmitters for this module. When calculating the minimum operating voltage for transmitters, consider to allow margins for voltage drop in external wiring.

*5: A Zener barrier is not allowed to be connected with this module for current output. Use an isolation barrier when the module is used in intrinsically safe application.

*6: A Zener barrier is not allowed to be connected with this module for current input. Use an isolation barrier when the module is used in intrinsically safe application. And this module can be used only with the following FCSs – AFG30□, AFG40□, AFG8□□, AFF50□, AFV10□, AFV30□, or AFV40□.

*7: Input mode for each channel is selectable by software.

*8: When this module is installed to a ER bus node unit with HART function, the EB401 firmware must be rev. 2 or later.

All Rights Reserved. Copyright © 2011, Yokogawa Electric Corporation

■ ANALOG I/O MODULE (WITH HART COMMUNICATION)

The analog I/O module (with HART communication function) connected to a transmitter or a valve positioner receives HART variable (*1) in addition to exchange analog input/output data by 4 – 20 mA signal with field control stations (FCS). There are 8 types of analog I/O modules (with HART communication function).

*1: HART variable can be read by HART Command #3.

There are 8 types of analog I/O modules (with HART communication function).

Model	Model Name	Function
AAI141-H	Analog Input Module (Current Input)	16-channel, 4 to 20 mA, non-isolated
AAB141-H	Analog Input Module (Voltage/current Input)	16-channel, 1 to 5 V/4 to 20 mA, non-isolated
AAI841-H	Analog I/O Module (Current I/O)	8-channel input/8-channel output, 4 to 20 mA, non-isolated
AAB842-H	Analog I/O Module (Voltage/current Input, Current Output)	8-channel input/8-channel output, 1 to 5 V/4 to 20 mA input, 4 to 20 mA output, non-isolated
AAI135-H	Analog Input Module (Current Input)	8-channel, 4 to 20 mA, isolated channels
AAI835-H	Analog I/O Module (Current I/O)	4-channel input/4-channel output, 4 to 20 mA, isolated channels
AAI143-H	Analog Input Module (Current Input)	16-channel, 4 to 20 mA, isolated
AAI543-H	Analog Output Module (Current Output)	16-channel, 4 to 20 mA, isolated

● Communication with HART Devices

The analog I/O modules (with HART communication function) communicate with field devices and store analog data and HART variables in the Input/Output image area in the communication module. An FCS refers to and sets the Input/Output image by accessing the analog I/O modules (with HART communication function). The FCS utilizes the field device data via I/O terminals of the function block in the same way as other analog/digital I/O signals.

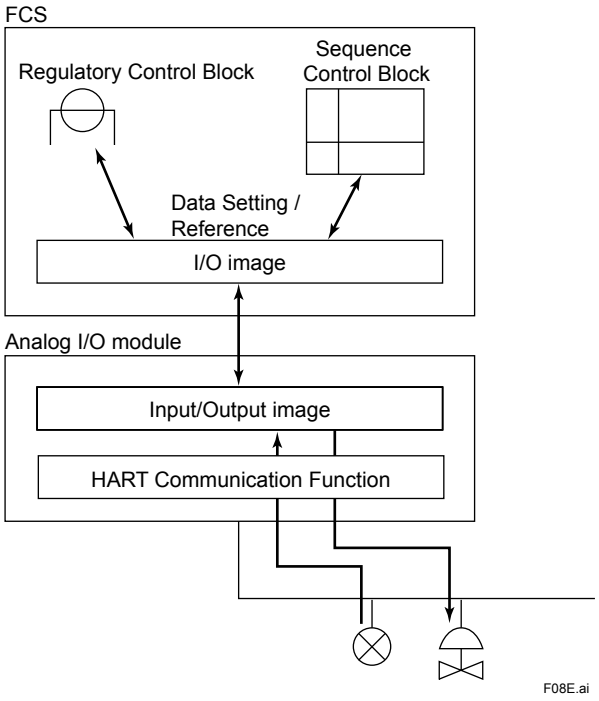

Figure Process Data Flow of HART Communications

All Rights Reserved. Copyright © 2011, Yokogawa Electric Corporation

● HART Communication Functional Specifications

The analog I/O modules (with HART communication function) are equipped with HART modems and eable HART communication (*1) by directly connecting the HART devices to he modules.

No. of HART devices: Max. 16 devices/module
HART variables: Max. 32 points/module
HART variables can be treated as ordinary process input data via %Z terminal connection.
It is just for input.
HART multidrop connection (*2): Max. 5 devices/channel
HART variables data refresh cycle time :
1 second/device (When maximum of 16 devices are connected, it is 17 seconds per ESB bus connection and 19 seconds for ER bus connection.)
Analog data refresh cycle time (*3):
The number of ER bus node unit determines the analog data refresh cycle time in between the ER bus master interface module (EB401) and ER bus node units.
With HART communication, it takes twice as much time than without HART comunication.

	No. of ER bus node unit		
	2	4	6
Analog I/O (without HART communication)	50 ms	100 ms	200 ms
Analog I/O (with HART communication)	100 ms	200 ms	400 ms

*1: HART communication refers to HART variable communicaiton, on-demand communication, and hand held terminal (HHT) communication.
*2: It is possible to connect only input devices. This connection does not support analog data value nor burst function.
*3: Field control units (AFV30□ and AFV40□) do not support ER bus node unit (ANR10□).

● HART Communication Specifications

Table HART Communication Specifications

Function	Description
Communication mode	Serial half duplex, start-stop synchronization, 1 start/ 8 bit/ odd parity/ 1 stop
Applicable standard	HART Protocol Revision 5.7 (*1)
Transmission speed	1200 ±2 bps
Modulation technique	Binary phase-continuous FSK 1: 1200 Hz ±1 %, 0: 2200 Hz ±1%
Frame length	5 to 267 bytes Contents of max. 267 bytes: Delimiter: 1 Address: 5 Command: 1 Byte count: 1 Data: 255 (includes two bytes of response code) Check byte: 1
Frame detection	3 byte header byte-count carrier (ON/OFF) Preamble: 5 to 20 bytes
Error detection coding	Longitudinal/vertical parity
Response time	Max. 28 characters (256.7 ms)
No response timer	33 characters (305 ms) for primary, 41 characters (380 ms) for secondary
Bus monitor	8 characters (75 ms)
Response window	20 ms

*1: The HART 5, 6, and 7 devices can be connected but applying the HART protocol 5.7 function.

All Rights Reserved. Copyright © 2011, Yokogawa Electric Corporation

● HART Communication System Configuration

The analog I/O modules (with HART communication function) can be configured dual-redundant by placing the two modules in the adjacent slots (odd number and even number slots) on the same node unit.

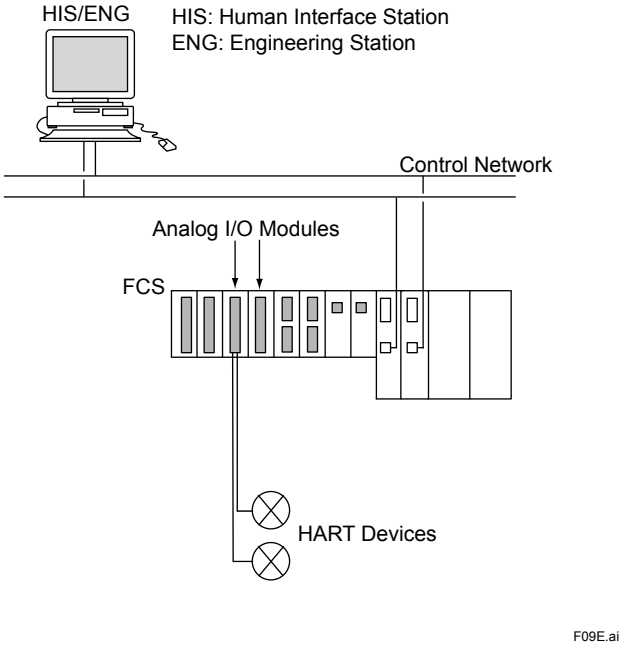

Figure HART Communication System Configuration (Dual-redundant)

All Rights Reserved. Copyright © 2011, Yokogawa Electric Corporation

■ EXTERNAL DIMENSIONS

● **AAI141, AAV141, AAV142, AAV144, AAI841, AAB841, AAV542, AAV544, AAI143, AAI543, AAT141, AAR181, AAI135, AAI835, AAP135, AAB141, AAB842**

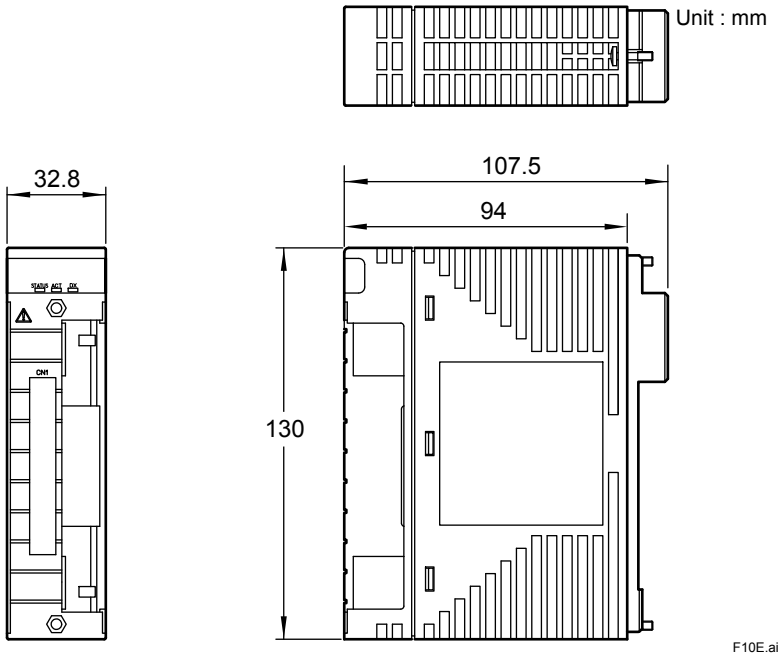

● **AAT145, AAP849**

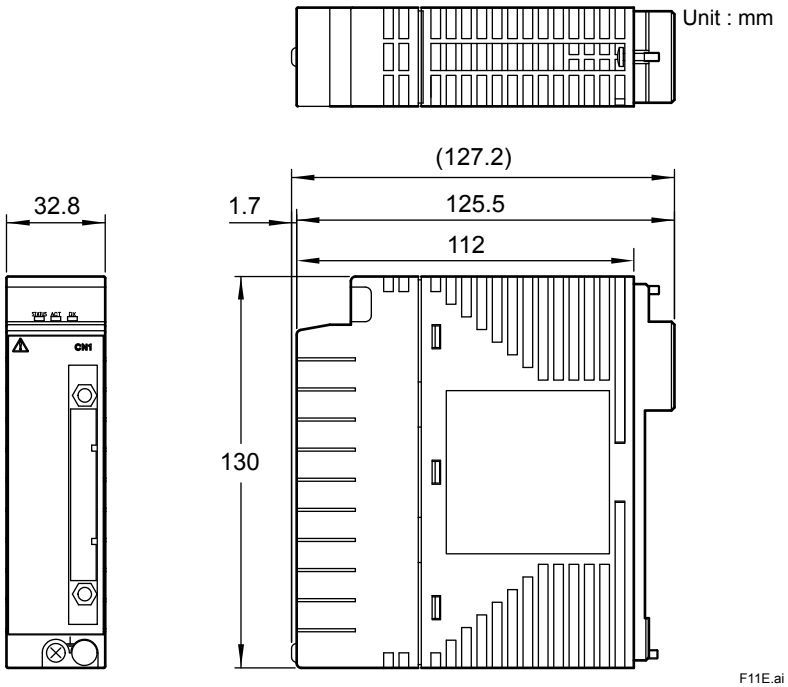

All Rights Reserved. Copyright © 2011, Yokogawa Electric Corporation

		Description
Model	AAI841	Analog I/O Module (4 to 20 mA input , 4 to 20 mA output, 8-channel input/8-channel output, Non-Isolated)
Suffix Codes	-S	Standard type
	-H	With digital communication (HART protocol)
	5	With no explosion protection
	E	With explosion protection
	0	Basic type
	3	With ISA Standard G3 option and temperature (-20 to 70 °C) option
Option Codes	/K4A00	With KS Cable Interface Adapter [Model : ATK4A-00]
	/A4S00	With Pressure Clamp Terminal Block for Analog [Model : ATA4S-00]
	/A4S10	With Pressure Clamp Terminal Block for Analog (surge absorber) [Model : ATA4S-10]
	/A4D00	With Dual Pressure Clamp Terminal Block for Analog [Model : ATA4D-00]
	/A4D10	With Dual Pressure Clamp Terminal Block for Analog (surge absorber) [Model : ATA4D-10]
	/CCC01	With Connector Cover for MIL Cable [Model : ACCC01]

		Description
Model	AAB841	Analog I/O Module (1 to 5 V input, 4 to 20 mA output, 8-channel input/8-channel output, Non-Isolated)
Suffix Codes	-S	Standard type
	5	With no explosion protection
	E	With explosion protection
	0	Basic type
	3	With ISA Standard G3 option and temperature (-20 to 70 °C) option
Option Codes	/K4A00	With KS Cable Interface Adapter [Model : ATK4A-00]
	/M4A00	With MAC2 Compatible Adapter [Model : ATM4A-00]
	/V4A00	With VM2 Compatible Adapter [Model : ATV4A-00] (*1)
	/A4S00	With Pressure Clamp Terminal Block for Analog [Model : ATA4S-00]
	/A4S10	With Pressure Clamp Terminal Block for Analog (surge absorber) [Model : ATA4S-10]
	/A4D00	With Dual Pressure Clamp Terminal Block for Analog [Model : ATA4D-00]
	/A4D10	With Dual Pressure Clamp Terminal Block for Analog (surge absorber) [Model : ATA4D-10]
	/CCC01	With Connector Cover for MIL Cable [Model : ACCC01]

*1: When using this adapter, 4 to 20 mA output (8-channel) of AAB841 varies to 1 to 5 V output.

		Description
Model	AAB842	Analog I/O Module (1 to 5 V/4 to 20 mA input, 4 to 20 mA output, 8-channel input/8-channel output, Non-Isolated)
Suffix Codes	-H	With digital communication (HART protocol)
	5	With no explosion protection
	E	With explosion protection
	0	Basic type
	3	With ISA Standard G3 option and temperature (-20 to 70 °C) option
Option Codes	/M4A00	With MAC2 Compatible Adapter [Model : ATM4A-00]
	/V4A00	With VM2 Compatible Adapter [Model : ATV4A-00] (*1)

*1: When using this adapter, 4 to 20 mA output (8-channel) of AAB842 varies to 1 to 5 V output.

		Description
Model	AAV542	Analog Output Module (-10 to +10 V, 16-channel, Non-Isolated)
Suffix Codes	-S	Standard Type
	5	With no explosion protection
	E	With explosion protection
	0	Basic type
	3	With ISA Standard G3 option and temperature (-20 to 70 °C) option
Option Codes	/K4A00	With KS Cable Interface Adapter [Model : ATK4A-00]
	/A4S00	With Pressure Clamp Terminal Block for Analog [Model : ATA4S-00]
	/A4S10	With Pressure Clamp Terminal Block for Analog (surge absorber) [Model : ATA4S-10]
	/A4D00	With Dual Pressure Clamp Terminal Block for Analog [Model : ATA4D-00]
	/A4D10	With Dual Pressure Clamp Terminal Block for Analog (surge absorber) [Model : ATA4D-10]
	/CCC01	With Connector Cover for MIL Cable [Model : ACCC01]

All Rights Reserved. Copyright © 2011, Yokogawa Electric Corporation