3300 XL NSv Proximity Transducer System

Datasheet

Cordant™

147385 Rev. R

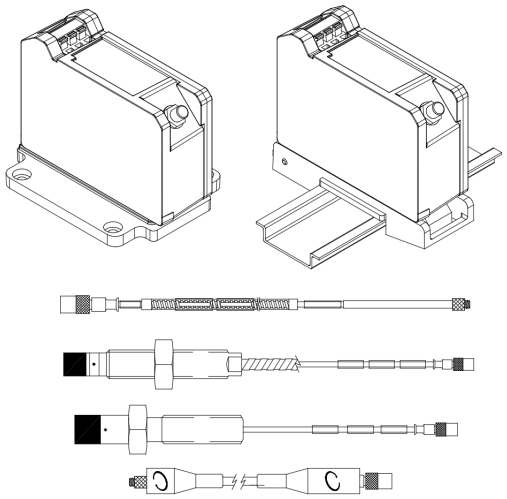

Description

The 3300 XL NSv Proximity Transducer system is intended for use with centrifugal air compressors, refrigeration compressors, process gas compressors, and other machines with tight installation requirements. The 3300 XL NSv Proximity Transducer System consists of:

- a 3300 NSv probe
- a 3300 NSv extension cable
- a 3300 XL NSv Proximitor Sensor(1)

The primary uses for the 3300 XL NSv Transducer System are for areas where counter bore, sideview, or rearview restrictions limit the use of standard Bently Nevada 3300 and 3300 XL 5 and 8 mm Transducer Systems. It is also ideal for small target applications, such as measuring radial vibration on shafts smaller than 51 mm (2 in) or axial position on flat targets smaller than 15 mm (0.6 in). It is primarily used in the following applications on fluid-filmed bearing machines where a small shaft or reduced side-view is present:

- Radial vibration and radial position measurements
- Axial (thrust) position measurements
- Tachometer and zero speed measurements
- Phase reference (Keyphasor signals)

The 3300 XL NSv Transducer System design allows it to replace both the 3300 RAM Transducer Systems and the 3000-series or 7000-series 190 Transducer System. Upgrades from the 3300 RAM system to the 3300 XL NSv system may use the existing probe, extension cable, and monitoring

Baker Hughes

system with 3300 XL NSv Proximitor Sensor. Upgrades from the 3000-series or 7000-series Transducer System must replace the probe, extension cable, and Proximitor Sensor with NSv components.

The 3300 XL NSv Transducer System has an Average Scale Factor of 7.87 V/mm (200 mV/mil), which is the most common output for eddy current transducers. Its enhanced side-view and small target characteristics give it a shorter linear range than the Bently Nevada 3300 XL-series 5 and 8 mm Transducer System. The 1.5 mm (60 mils) of linear range exceeds the linear range of the 3000-series 190 Transducer System.



Although the terminals and connector on the Proximitor Sensor have protection against electrostatic discharge, take reasonable precautions to avoid electrostatic discharge during handling.

Proximitor Sensor

The 3300 XL NSv Proximitor Sensor has similar features to those found in the 3300 XL 8 mm Proximitor Sensor. Its thin design allows the user to mount it in either a high-density DIN-rail installation or a more traditional panel mount configuration. Improved RFI/EMI immunity allows the 3300 XL NSv Proximitor Sensor to achieve European CE mark approvals without any special mounting considerations. This RFI immunity also prevents nearby high frequency radio signals from adversely affecting the transducer system. SpringLoc terminal strips on the Proximitor Sensor require no special installation tools and facilitate faster, highly robust field wiring connections.

Proximity Probe and Extension Cable

The 3300 NSv probe and extension cable are mechanically and electrically compatible and interchangeable with Bently Nevada's previous 3300 RAM proximity probe and extension cable. The NSv probe has increased chemical resistance compared to the 3300 RAM probe, which allows its use in many process compressor applications. The side-view characteristics of the 3300 NSv probe are also superior to those of the 3000-series 190 probe when gapping the 3300 NSv probe at the same distance from the probe target.

The 3300 NSv probe comes in varying probe case configurations, including armored and unarmored 1/4-28, 3/8-24, M8X1 and M10X1 probe threads. The reverse mount 3300 NSv probe comes standard with either 3/8-24 or M10X1 threads. All components of the transducer system have gold-plated brass ClickLoc connectors. ClickLoc connectors lock into place and prevent the connection from loosening. The patented TipLoc molding method provides a robust bond between the probe tip and the probe body. Bently Nevada's patented CableLoc design provides 220 N (50 lb) of pull strength and securely attaches the probe cable to the probe tip. Connector protectors are recommended for use on the probe-to-extension cable connection, as well as on the cable-to-Proximitor Sensor connection. Connector protectors prevent most liquids from entering into the ClickLoc connectors and adversely affecting the electrical signal(2).

Notes:

(1) Proximitor Sensors are supplied by default from the factory calibrated to AISI 4140 steel. Calibration to other target materials is available upon request.

(2) Silicone tape is also provided with each 3300 NSv extension cable and can be used instead of connector protectors. Silicone tape is not recommended in applications where the probe-to-extension cable connection will be exposed to turbine oil.

Specifications

Unless otherwise noted, the following specifications are for a 3300 XL NSv Proximitor Sensor, extension cable and probe between 0°C and +45°C (+32°F to +113°F) at a maximum altitude of 2000 m, with a -24 Vdc power supply, a 10 kΩ load, a Bently Nevada supplied AISI 4140 steel target that is 31 mm (1.2 in) diameter or larger, and a probe gap of 1.0 mm (40 mils). The system accuracy and interchangeability specifications do not apply when using a transducer system calibrated to any target other than a Bently Nevada AISI 4140 steel target.

Electrical

Proximitor Sensor Input	Accepts one non-contacting 3300 RAM or 3300 NSv Proximity Probe and Extension Cable.
Power	Requires -17.5 Vdc to -26 Vdc without barriers at 12 mA maximum consumption, -23 Vdc to -26 Vdc with barriers. Operation at a more positive voltage than -23.5 Vdc can result in reduced linear range.
Supply Sensitivity	Less than 2 mV change in output voltage per volt change in input voltage.
Output resistance	50 Ω
Probe dc Resistance	
Probe Length (m)	Resistance from the Center Conductor to the Outer Conductor (R_{PROBE}) (ohms)
0.5	4.0 ± 0.5
1.0	4.2 ± 0.5
5.0	5.3 ± 0.7
7.0	5.9 ± 0.9
Extension cable dc resistance	Center conductor: 0.220 Ω/m (0.067 Ω/ft) Shield: 0.066 Ω/m (0.020 Ω/ft)
Extension cable capacitance	69.9 pF/m (21.3 pF/ft) typical
Field Wiring	0.2 to 1.5 mm² (16 to 24 AWG)[0.25 to 0.75 mm² (18 to 23 AWG) with ferrules]. Recommend using three-conductor shielded triad cable. Maximum length of 305 meters (1,000 feet) between the 3300 XL NSv Proximitor Sensor and the monitor. See the frequency response graphs Figure 16 and Figure 17 for signal rolloff at high frequencies when using longer field wiring lengths.
Linear Range	1.5 mm (60 mils). Linear range begins at approximately 0.25 mm (10 mils) from target and is from 0.25 to 1.75 mm (10 to 70 mils) (approximately -1 to -13 Vdc).
Recommended Gap Setting	1.0 mm (40 mils)
System performance over ambient temperature range (0°C to 45°C)	
Incremental Scale Factor (ISF)	7.87 V/mm (200 mV/mil) +12.5%/-20% including interchangeability error when measured in increments of 0.25 mm (10 mils) over the 1.5 mm (60 mil) linear range.
Deviation from best fit straight line (DSL)	Less than ±0.06 mm (±2.3 mils).

Frequency Response	0 to 10 kHz: +0, -3 dB typical, with up to 305 meters (1000 feet) of field wiring.
Target Size (flat target)	Minimum: 8.9 mm (0.35 in) diameter Recommended minimum: 13 mm (0.5 in) diameter Axial position measurements on shaft diameters smaller than 13 mm (0.5 in) will generally result in a change in scale factor. Reducing the gap between the probe and target will help limit the change in scale factor. See Figure 12 for additional information.

Shaft Diameter	Minimum (standard X-Y probe configuration): 30 mm (1.2 in) Minimum (X-Y proximity probes offset axially by 23 mm [0.9 in]): 20 mm (0.8 in) Measurements on shaft diameters smaller than 30 mm (1.2 in) usually require close spacing of radial vibration or axial position transducers. This creates the potential for their electromagnetic emitted fields to interact with one another (cross-talk), resulting in erroneous readings. To prevent cross-talk, maintain minimum separation of transducer tips of at least 25 mm (1.0 in) for axial position measurements or 23 mm (0.9 in) for radial vibration measurements. See Figure 14: Probe Cross-talk with Probes Mounted in Parallel and Figure 15: Probe Cross-talk with Probes Mounted in X-Y Configuration. Radial vibration or radial position measurements on shaft diameters smaller than 20 mm (0.8 in) will generally result in greater than a 10% change in Average Scale Factor (ASF). See Figure 13 for additional information.

Counterbore	Minimum: 9.5 mm (0.375 in) Recommended minimum: 13 mm (0.5 in) Counterbores smaller than 13 mm (0.5 in) generally result in a change in scale factor at far gaps. Reducing the gap between the probe and the target will allow the transducer system to maintain its Average Scale Factor (ASF) over a reduced linear range. See Figure 9 for additional information.

Effects of 60 Hz Magnetic Fields Up to 300 Gauss (5 meter system)			
Output voltage in mil pp/gauss			
Gap	Proximitor Sensor	Probe	Ext. Cable
0.25 mm (10 mils)	0.006	0.001	0.001
1.0 mm (40 mils)	0.007	0.002	0.001
1.75 mm (70 mils)	0.008	0.002	0.003

Mechanical

Probe Tip Material	Polyphenylene sulfide (PPS).
Probe Case Material	AISI 304 stainless steel (SST).
Probe Cable Specifications	75 Ω coaxial, fluoroethylene propylene (FEP) insulated probe cable in the following total probe lengths: 0.5, 1, 5, or 7 meters.
Extension Cable Material	75 Ω coaxial, fluoroethylene propylene (FEP) insulated.
Proximitor Sensor Material	A380 aluminum
System Length	5 or 7 meters including extension cable
Extension Cable Armor (optional)	Flexible AISI 302 SST with/without FEP outer jacket.
Tensile Strength (maximum rated)	220 N (50 lb) probe case to probe lead. 220 N (50 lb) at probe lead to extension cable connectors. 220 N (50 lb) probe case to stainless steel armor.
Connector material	Gold-plated brass

Connector-to-connector Torque		
Probe Case Torque	**Maximum Rated**	**Recommended**
1/4-28 or M8X1 probe cases	7.3 N•m (65 in•lb)	5.1 N•m (45 in•lb)
3/8-24 or M10X1 probe cases	33.9 N•m (300 in•lb)	11.3 N•m (100 in•lb)
3/8-24 or M10X1 probe cases – first three threads	22.6 N•m (200 in•lb)	7.5 N•m (66 in•lb)
Reverse mount probes	22.6 N•m (200 in•lb)	7.5 N•m (66 in•lb)

Recommended torque	Finger tight
Maximum torque	0.56 N•m (5 in•lb)

Minimum Bend Radius (with or without sst armor)	25.4 mm (1.0 in)
System Weight (typical)	
Probe	Approximately 14 to 150 g (0.5 to 5.3 oz)
Extension Cable	45 g/m (0.5 oz/ft)
Armored Extension Cable	64 g/m (0.7 oz/ft)
Proximitor Sensor	255 g (9 oz)

Thread Engagement Limits

Probe Case Thread	Maximum Length of Thread Engagement
1/4-28	0.375 in
3/8-24	0.563 in
M8x1	12 mm
M10x1	15 mm

Maximum thread engagement lengths are per the industry standard of 1.5 times the nominal thread diameter. A fit class matching that of the external probe thread is assumed for all internal threads. Applications with thread engagement lengths exceeding the values in the table above may exhibit binding during installation. Contact your Bently Nevada representative if you require probe thread engagement lengths exceeding the values above. Bently Nevada does not replace proximity probes under warranty due to excessive thread engagement lengths.

When drilling and tapping a mounting hole **for a 1/4-28 probe**, a **#3 or larger tap drill** is recommended.

Environmental Limits

Probe Temperature Range	
Operating Temperature	-52°C to +177°C (-62°F to +351°F)
Storage Temperature	-52°C to +177°C (-62°F to +351°F) Exposing the probe to temperatures below -34°C (-30°F) for a sustained period of time may cause premature failure of the pressure seal.
Extension Cable Temperature Range	
Operating and Storage Temperature	-52°C to +177°C (-62°F to +351°F)
Proximitor Sensor Temperature Range	
Operating Temperature	-52°C to +100°C (-62°F to +212°F)
Storage Temperature	-52°C to +105°C (-62°F to +221°F)
Relative Humidity	100% condensing, non-submersible when connectors are protected.Tested to IEC 68-2-3 damp heat.

Probe Pressure	3300 NSv probes are designed to seal differential pressure between the probe tip and case. The probe sealing material consists of a Viton O-ring. Probes are not pressure tested prior to shipment. Contact our custom design department if you require a test of the pressure seal for your application.



It is the responsibility of the customer or user to ensure that all liquids and gases are contained and safely controlled should leakage occur from a proximity probe.In addition, solutions with high or low pH values may erode the tip assembly of the probe causing media leakage into surrounding areas. Bently Nevada will not be held responsible for any damages resulting from leaking 3300 NSv Proximity Probes. In addition, 3300 NSv Proximity Probes does not be replaced under the service plan due to probe leakage.

Compliance and Certifications

FCC

This device complies with part 15 of the FCC Rules. Operation is subject to the following two conditions:

- This device may not cause harmful interference.
- This device must accept any interference received, including interference that may cause undesired operation.

EMC

European Community Directive:

EMC Directive 2014/30/EU

Standards

EN 61000-6-2; Immunity for Industrial Environments

EN 61000-6-4; Emissions for Industrial Environments

RoHS

European Community Directive:

RoHS Directive 2011/65/EU

China RoHS

Cables associated with the product(s) mentioned in this datasheet have an EFUP designation of 15 years, in accordance with SJ/T 11364-2024.



Maritime

2019 Rules for Conditions of Classification,

Part 1, 1-1-1/7.7, 1-1-A3, 1-1-A4

2019 Rules for Conditions of Classification,

Part 1, Offshore Units and Structures

1-1-4/9.7, 1-1-A2, 1-1-A3

Functional Safety

SIL 2, HFT = 0

SIL 3, HFT = 1

Hazardous Area Approvals

For the detailed listing of country and product-specific approvals, refer to the *Approvals Quick Reference Guide (108M1756)*.

For additional technical documentation, please log in to bntechsupport.com and access the Bently Nevada Media Library.

cNRTLus

3300 XL Proximitor Sensor

ia When installed with intrinsically safe zener barriers per drawing 141092 or when installed with galvanic isolators.	Class I, Zone 0: AEx/Ex ia IIC T4/T5 Ga; Class I, Groups A, B, C, and D, Class II, Groups E, F and G, Class III; T5 @ Ta= -55°C to + 40°C. T4 @ Ta= -55°C to + 80°C.
nA, ec When installed with non-incendive circuit connected per drawing 140979.	Class I, Zone 2: AEx/Ex nA IIC T4/T5 Gc; Class I, Division 2, Groups A, B, C, and D; Class I, Zone 2: AEx/Ex ec IIC T4/T5 Gc; Class I, Division 2, Groups A, B, C, and D; T5 @ Ta= -55°C to + 40°C T4 @ Ta= -55°C to + 80°C

3300 XL Probe

ia When installed with intrinsically safe zener barriers per drawing 141092 or when installed with galvanic isolators.	Class I, Zone 0: AEx/Ex ia IIC T5...T1 Ga; Class 1, Groups A, B. C, and D, Class II, Groups E, F, and G, Class III; (see Temperature Schedule table to follow)
nA, ec When installed with non-incendive circuit connected per drawing 140979.	Class I, Zone 2: AEx/Ex nA IIC T5...T1 Gc; Class 1, Division 2, Groups A, B, C, D; Class 1, Zone 2: AEx/Ex ec IIC T5...T1 Gc; Class I, Division 2, Groups A, B, C, and D; (see Temperature Schedule table to follow)

ATEX/IECEx

3300 XL Proximitor Sensor

ia	II 1 G Ex ia IIC T4/T5 Ga Ex ia IIIC T90C/T105C Dc For EPL Dc: T105C @ Ta = -55°C to 100°C T90C @ Ta = -55°C to +85°C Ui= -28V / Uo= -28V Ii= 140mA / Io= 140mA Pi= 0.91W / Po= 0.742W Ci- 47nF / Co= 1.5nF Li= 1460µH / Lo= 610µH
nA,ec	II 3 G Ex nA IIC T4/T5 Gc Ex ec IIC T4/T5 Gc Ui= -28V / Ii= 140 mA T5 @ Ta= -55˚C to + 40˚C T4 @ Ta= -55 ˚C to + 80˚C

3300 XL Probe

Probe entity parameters are met when used with BN extension cables and connected to BN Prox.

<table>
<tr><td>ia</td><td>II 1 G
Ex ia IIC T5...T1 Ga,
(see Temperature Schedule table to follow)
Ex ia IIIC T90°C ... T280°C Dc
For EPL Dc:<table><tr><td>Ui= -28V</td><td>Ci = 1.5 nF</td></tr><tr><td>Ii = 140 mA</td><td>Li =610 µH</td></tr><tr><td>Pi = 0.91 W</td><td></td></tr></table></td></tr>
<tr><td>nA,ec</td><td>II 3 G
Ex nA IIC T5...T1 Gc,
Ex ec IIC T5...T1 Gc,
(see Temperature Schedule table to follow)<table><tr><td>Ui= -28V</td><td>Ii= 140 mA</td></tr></table></td></tr>
</table>

Temperature Schedule

Temperature Classification	Ambient Temperature (Probe Only)
For EPL Ga and Gc	
T1	-55°C to +232°C
T2	-55°C to +177°C
T3	-55°C to +120°C
T4	-55°C to +80°C
T5	-55°C to +40°C
For EPL Dc	
T280°C @ Ta	-55°C to +232°C
T225°C @ Ta	-55°C to +177°C
T170°C @ Ta	-55C to +120°C
T130°C @ Ta	-55°C to +80°C
T105°C @ Ta	-55°C to +100°C
T90°C @ Ta	-55°C to +40°C

Hazardous Area Conditions of Safe Use

cNRTLus:

ia

Install per Bently Nevada drawing 141092.

nA, ec

Install per Bently Nevada drawing 140979.

ATEX/IECEx:

ia

Install per Bently Nevada drawing 141092.

nA, ec

The Proximitor must be installed so as to provide the terminals with a degree of protection of at least IP54.

Ordering Information

For the detailed listing of country and product-specific approvals, refer to the *Approvals Quick Reference Guide (108M1756)*.

For additional technical documentation, please log in to bntechsupport.com and access the Bently Nevada Media Library.

3300 NSv Proximity Probes

330901 3300 NSv Probe, 1/4-28 UNF thread, without armor
330902 3300 NSv Probe, 1/4-28 UNF thread, with armor
330908 3300 NSv Probe, 3/8-24 UNF thread, without armor
330909 3300 NSv Probe, 3/8-24 UNF thread, with armor
Part Number-AA-BB-CC-DD-EE
A: Unthreaded Length Option

	Unthreaded length must be at least 0.7 inch less than the case length. Order in increments of 0.1 in Length configurations: Maximum unthreaded length: 9.2 in Minimum unthreaded length: 0.0 in Example: **04** = 0.4 in

B: Overall Case Length Option

	Order in increments of 0.1 in Threaded length configurations: Maximum case length: 9.9 in Minimum case length: 0.8 in Example: **2 4** = 2.4 in

C: Total Length Option	
05	0.5 meter (20 in)
10	1.0 meter (39 in)
50	5.0 meters (16.4 feet)
70	7.0 meters (23.0 feet)
D: Connector and Cable-Type Option	
01	Miniature coaxial ClickLoc connector with connector protector, standard cable
02	Miniature coaxial ClickLoc connector, standard cable
11	Miniature coaxial ClickLoc connector with connector protector, FluidLoc cable
12	Miniature coaxial ClickLoc connector, FluidLoc cable
E: Agency Approval Option	
00	Not required
05	Multiple Approvals

3300 NSv Proximity Probes, Metric

330903 3300 NSv Probe, M8X1 thread, without armor
330904 3300 NSv Probe, M8X1 thread, with armor
330905 3300 NSv Probe, M10X1 thread, without armor

330910 3300 NSv Probe, M10X1 thread, with armor	
Part Number-AA-BB-CC-DD-EE	
A: Unthreaded Length Option	
	Unthreaded length must be at least 20 mm less than the case length. Order in increments of 10 mm. Length configuration: Maximum unthreaded length: 230 mm Minimum unthreaded length: 0 mm Example: **06** = 60 mm
B: Overall Case Length Option	
	Order in increments of 10 mm. Metric thread configurations: Maximum length: 250 mm Minimum length: 20 mm Example: **06** = 60 mm
C: Total Length Option	
05	0.5 meter (20 in)
10	1.0 meter (39 in)
50	5.0 meters (16.4 feet)
70	7.0 meters (23.0 feet)
D: Connector and Cable-Type Option	
01	Miniature coaxial ClickLoc connector with connector protector, standard cable
02	Miniature coaxial ClickLoc connector, standard cable
11	Miniature coaxial ClickLoc connector with connector protector, FluidLoc cable
12	Miniature coaxial ClickLoc connector, FluidLoc cable
E: Agency Approval Option	
00	Not required
05	Multiple Approvals

3300 NSv Reverse Mount Probe

330906-02-12-CC-DD-EE 3/8-24 UNF threads	
330907-05-30- CC-DD-EE M10X1 threads	
C: Total Length Option	
05	0.5 meter (20 in)
10	1.0 meter (39 in)
50	5.0 meters (16.4 feet)
70	7.0 meters (23.0 feet)
D: Connector Option	
02	Miniature coaxial ClickLoc connector, standard cable
12	Miniature coaxial ClickLoc connector, FluidLoc cable
E: Agency Approval Option	
00	Not required

05	Multiple Approvals For a shorter delivery time, order commonly stocked probes. Currently, stocked probes consist of the following part numbers: 330901-00-24-05-02-00, 330901-00-90-05-02-00, 330902-00-50-05-02-00, 330902-00-95-05-02-00, 330903-00-02-10-02-00, 330903-00-03-10-02-00, 330906-02-12-05-02-00.

3300 XL NSv Proximitor Sensor

330980-AA-BB	
A: Total Length and Mounting Option	
50	5.0 meters (16.4 feet) system length, panel mount
51	5.0 meters (16.4 feet) system length, DIN mount
52	5.0 meters (16.4 feet) system length, no mounting hardware[1]
70	7.0 meters (23.0 feet) system length, panel mount
71	7.0 meters (23.0 feet) system length, DIN mount
72	7.0 meters (23.0 feet) system length, no mounting hardware[1]
B: Agency Approval Option	
00	Not required
05	Multiple approvals

3300 NSv Extension Cable

330930-AAA-BB-CC

Make sure that the extension cable length and the probe length, when added together, equal the Proximitor Sensor total length.

A: Cable Length Option	
040	4.0 meters (13.1 feet)
045	4.5 meters (14.8 feet)
060	6.0 meters (19.7 feet)
065	6.5 meters (21.3 feet)
B: Connector and Cable Option	
00	Without stainless steel armor
01	With stainless steel armor, with FEP jacket
02	With stainless steel armor, without FEP jacket
03	Without stainless steel armor, with connector protector
04	With stainless steel armor, with FEP jacket, with connector protector
05	With stainless steel armor, without FEP jacket, with connector protector
06	FluidLoc cable without stainless steel armor
07	FluidLoc cable with stainless steel armor, with FEP jacket
08	FluidLoc cable with stainless steel armor, without FEP jacket
09	FluidLoc without stainless steel armor, with connector protector

10	FluidLoc cable with stainless steel armor, with FEP jacket, with connector protector
11	FluidLoc cable with stainless steel armor, without FEP jacket, with connector protector
C: Agency Approval Option	
00	Not Required
05	Multiple Approvals

Accessories

147357	3300 XL NSv Proximitor User Guide
02120015	Bulk field wire. 1.0 mm^2 (18 AWG), 3 conductor, twisted, shielded cable with drain wire. Specify length in feet.
138492-01	Replacement panel-mount mounting pad
138493-01	Replacement DIN-mount mounting pad
01609137	BNC (F) to banana plugs
01609138	Proximitor Connector Test Pin wiring (two test pins to a BNC (F) connector)
40971-04	50 Ω cable with two BNC (M) connectors. Use this cable in combination with adapter 01609137 and adapter 01609138 when checking performance of the transducer system from the Proximitor Sensor test pin holes.
04310310	3300 XL Proximitor Sensor Panel-mount Screws. Package includes one 6-32 UNC thread forming mounting screw (supplied standard with 3300 XL Proximitor Housings [3300 XL option]).
03200006	Silicone self-fusing tape. A 9.1 meter (10 yard) roll of silicone tape to protect connectors. It is easy to install and provides excellent electrical isolation and protection from the environment. It is not recommended for use inside the casing of the machine.
40113-03	Connector Protector Kit for 3300 NSv probes and extension cables, including connector protectors and installation tools.
136536-01	Connector Protector Adapter. Allows connector protector installation tools manufactured prior to 1998 to be used with 75 Ω ClickLoc connectors.
40180-03	Connector Protectors. Package contains 10 pairs of connector protectors.
03800000	Male Connector Protector. Placed on the extension cable to connect to the female connector protector on the probe and provide environmental protection of connectors.
03800001	Female Connector Protector. Placed on the probe lead to connect to the male connector protector on the extension cable and provide environmental protection of connectors. Also placed on the extension cable to slide over the Proximitor Sensor connection and protect it from the environment.
330153-05	3300 NSv Connector Kit. Used on 3300 NSv probes and extension cables. Contains one set of male and female ClickLoc connectors, sleeves and one strip of silicone tape.

163356	Connector Crimp Tool Kit. Includes one set of 75 Ω ClickLoc inserts and connector installation instructions. Supplied with carrying case. Notes: 1. 330980 Proximitor Sensor A: options 52 and 72 come without a mounting pad and should be ordered only as spares. Each Proximitor Sensor needs a mounting pad to ensure that it is properly isolated from the housing ground.

Graphs and Figures

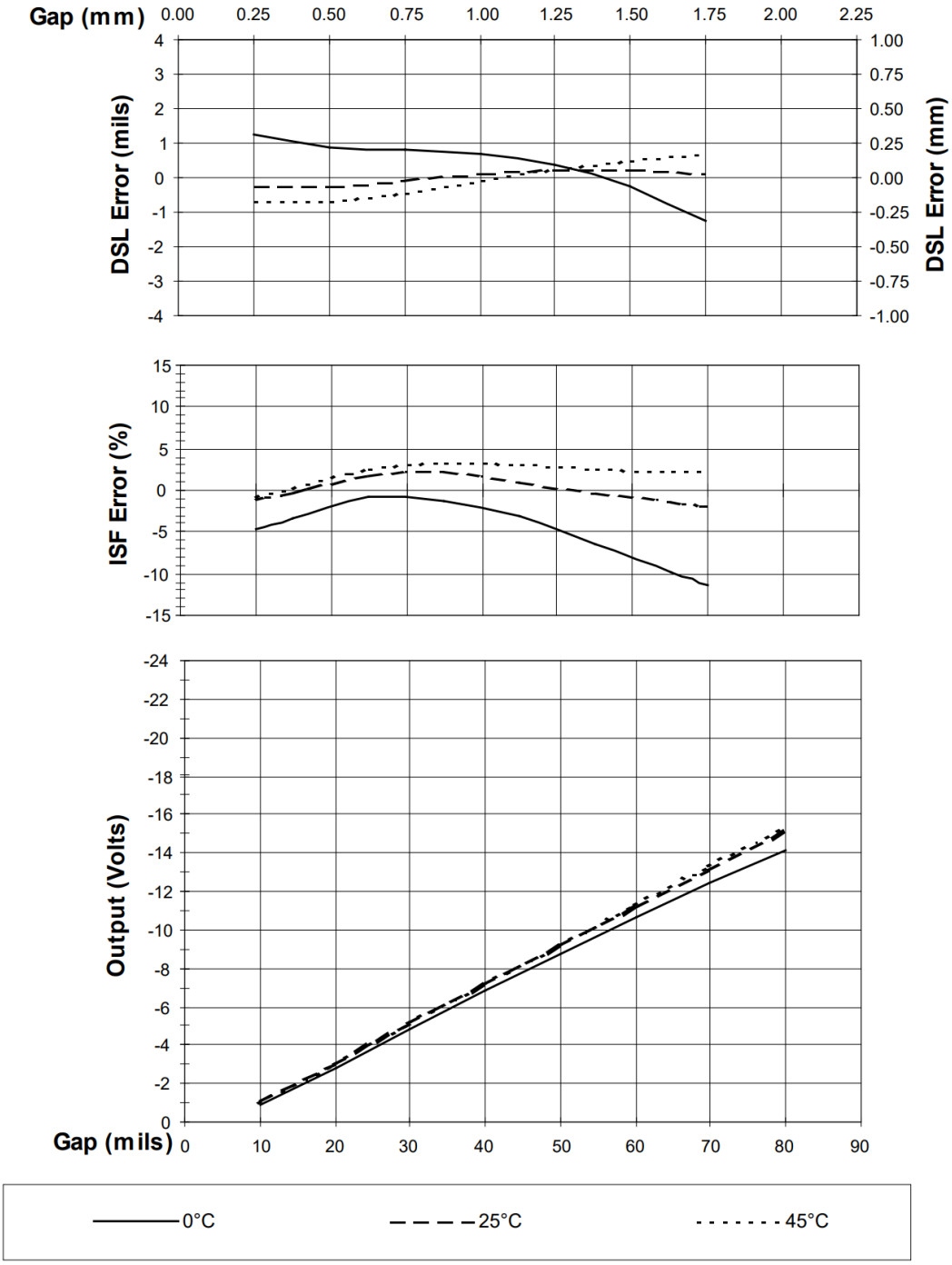

Figure 1: Typical 3300 XL NSv 5 m System over Ambient Temperature Range

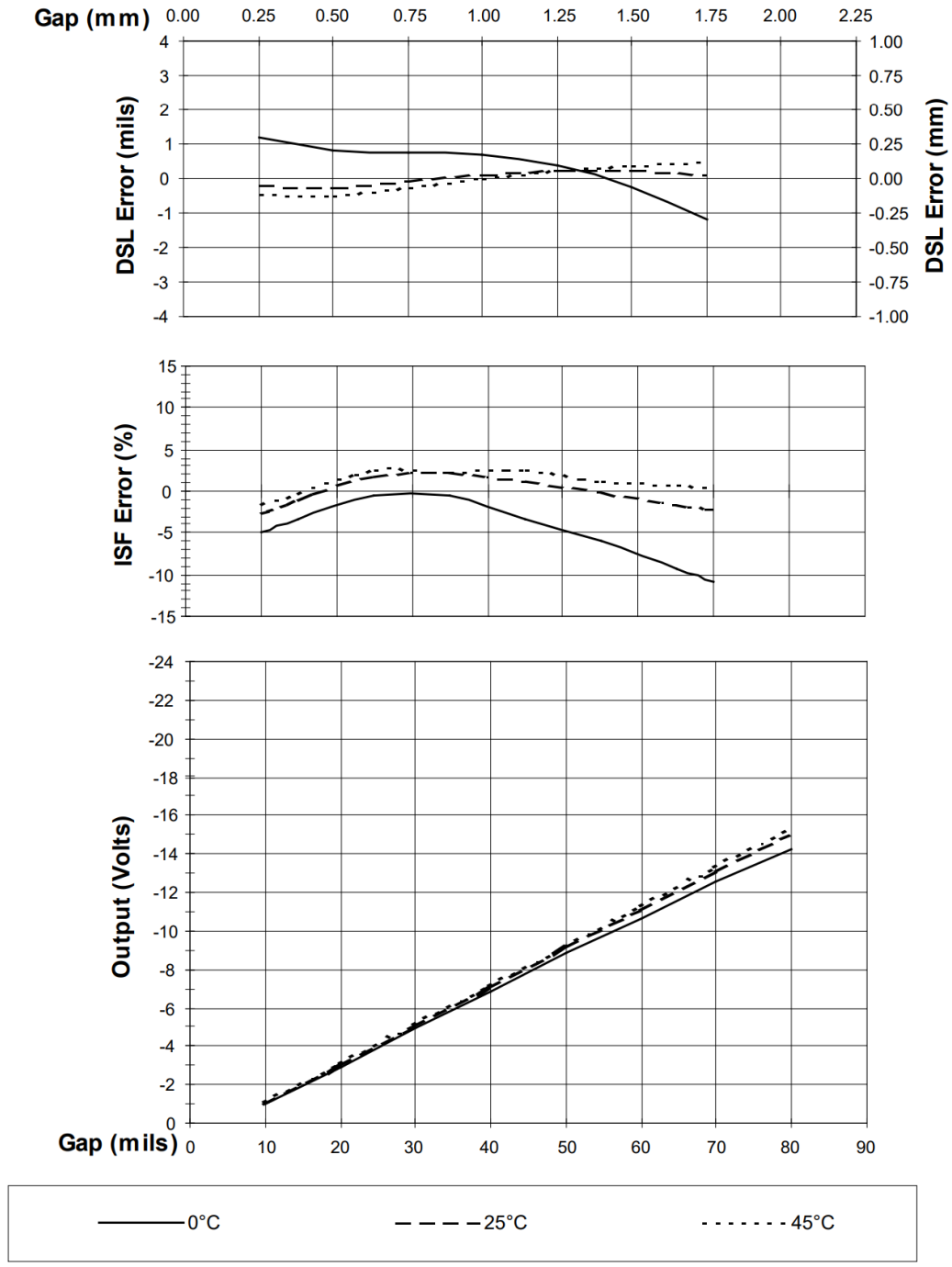

Figure 2: Typical 3300 XL NSv 7 m System over Ambient Temperature Range

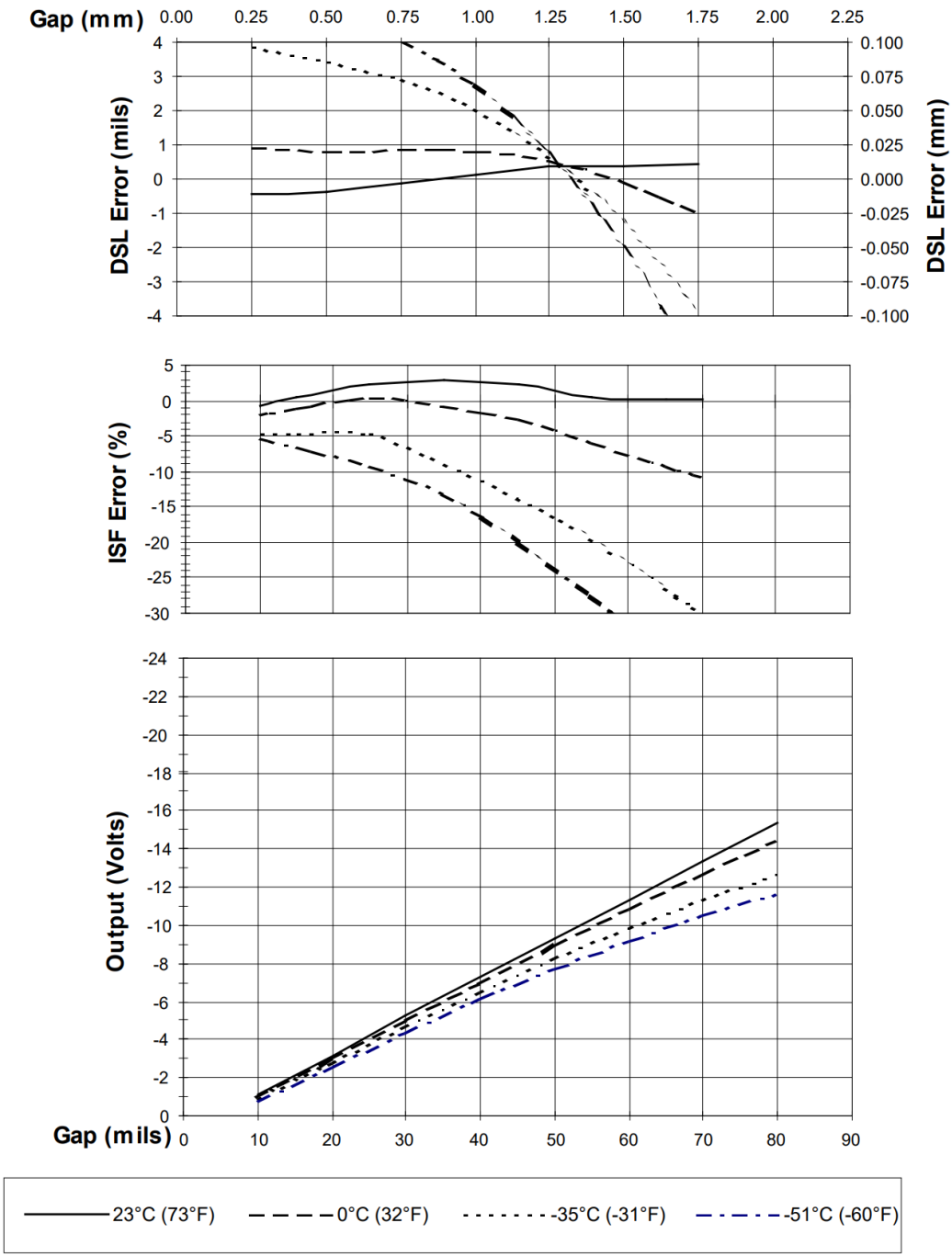

Figure 3: Typical 3300 NSv Probe + 1m Cable @ Low Temperature (Proximitor Sensor + 4 m of Extension Cable @ 25°C)

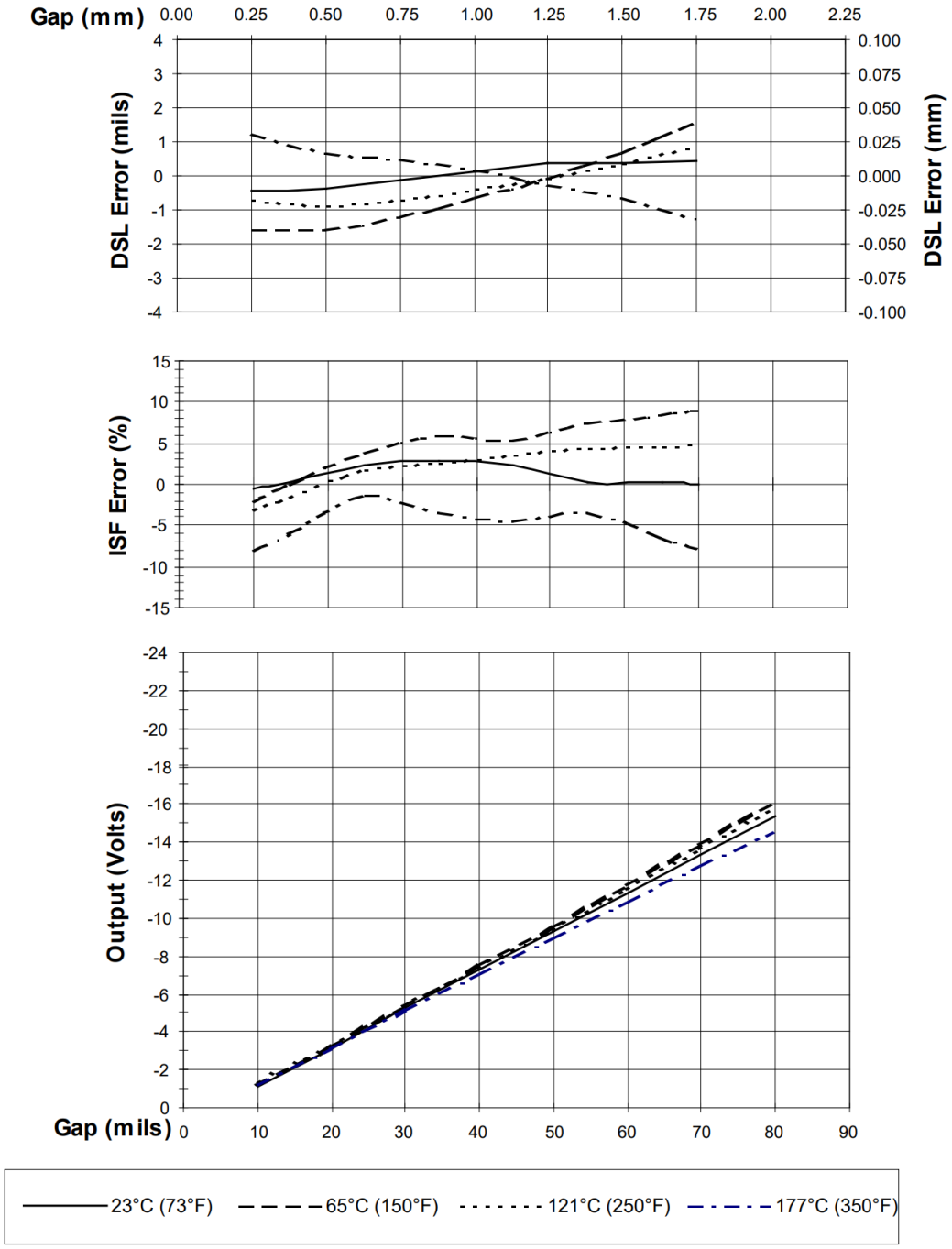

Figure 4: Typical 3300 NSv Probe + 1 m Cable @ High Temperature (Proximitor Sensor + 4 m of Extension Cable @ 25°C)

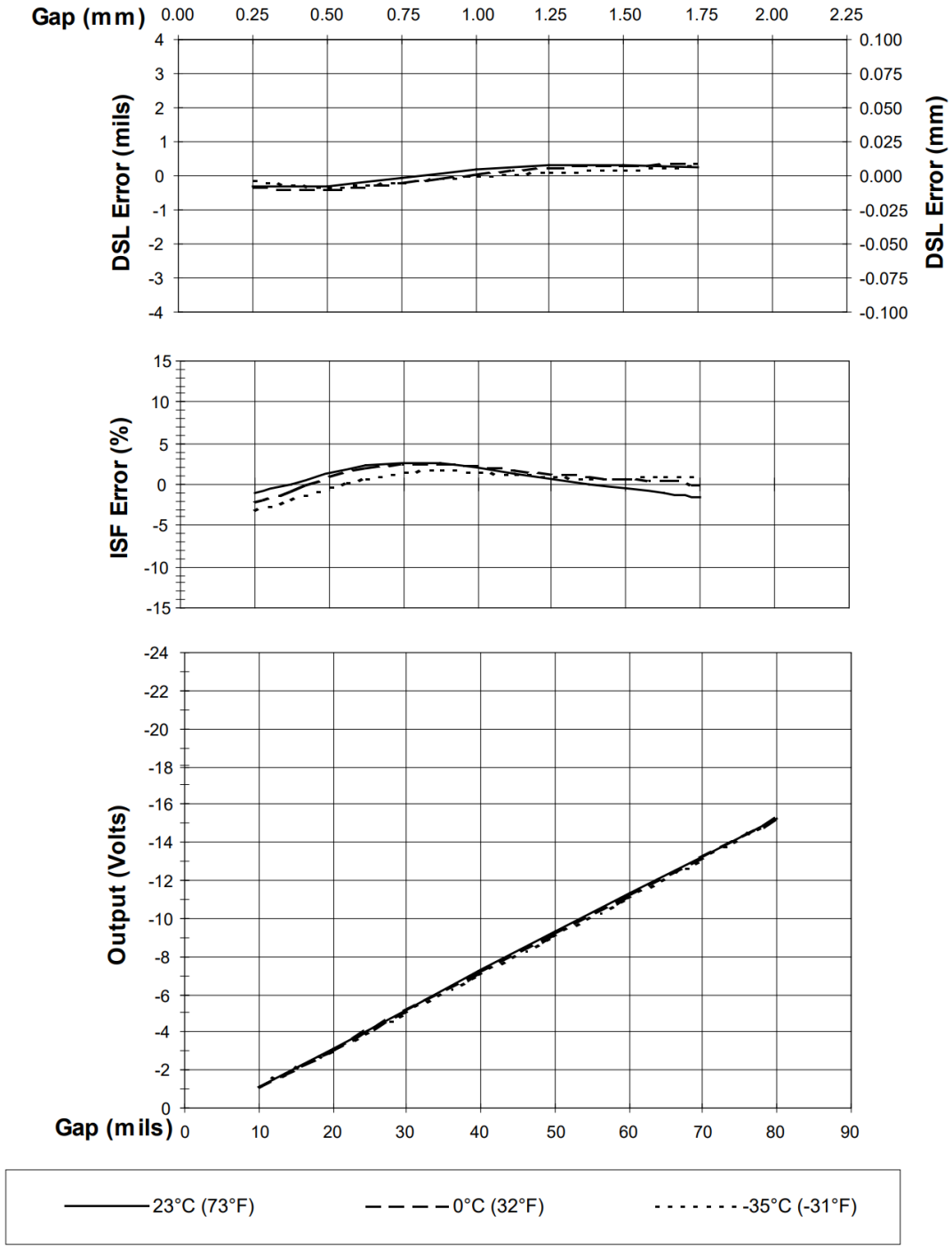

Figure 5: Typical 3300 XL NSv 5 m Proximitor Sensor with 4 m of Extension Cable @ Low Temperature (Probe is at 25°C)

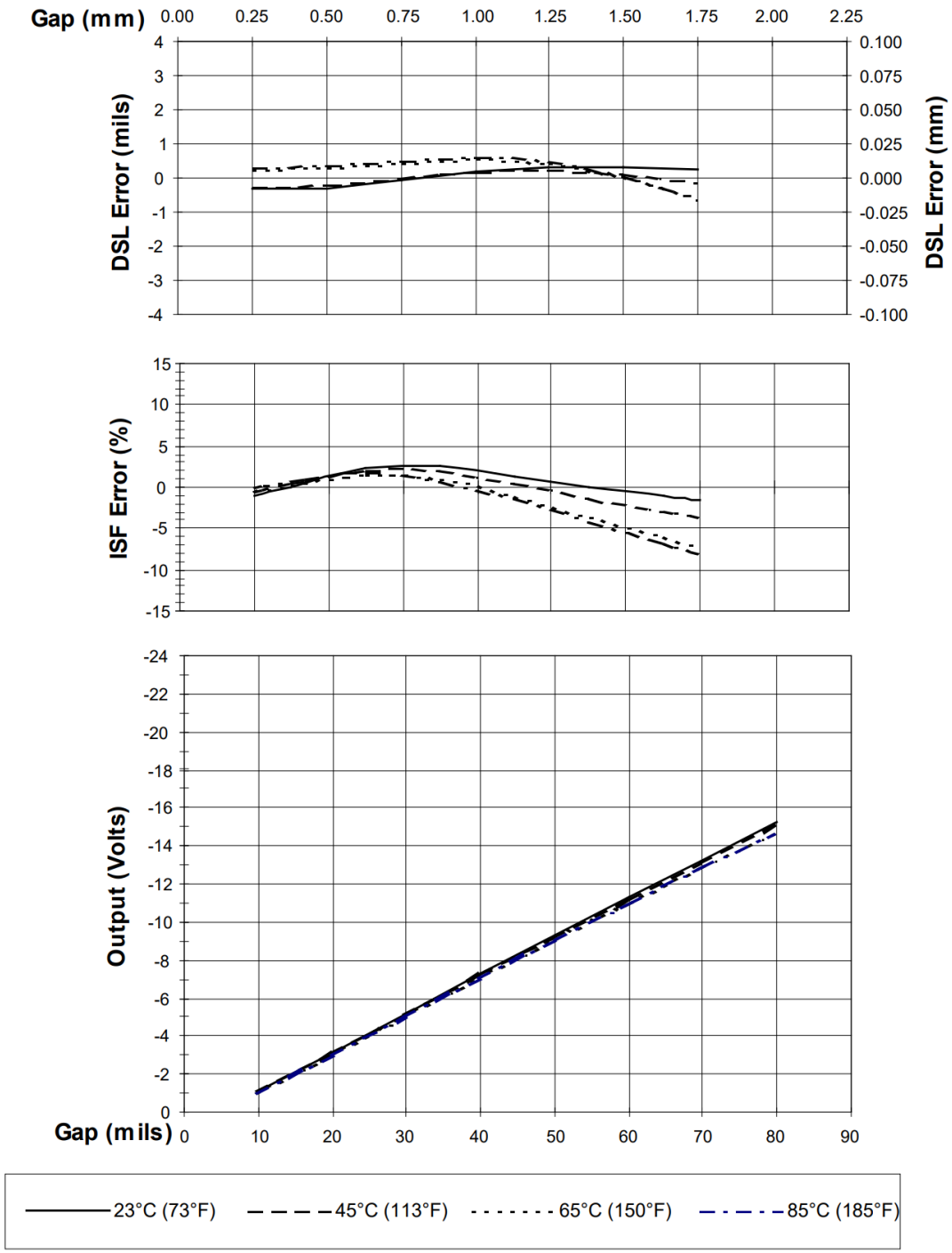

Figure 6: Typical 3300 XL NSv 5 m Proximitor Sensor with 4 m Extension Cable @ High Temperature (Probe is at 25°C)

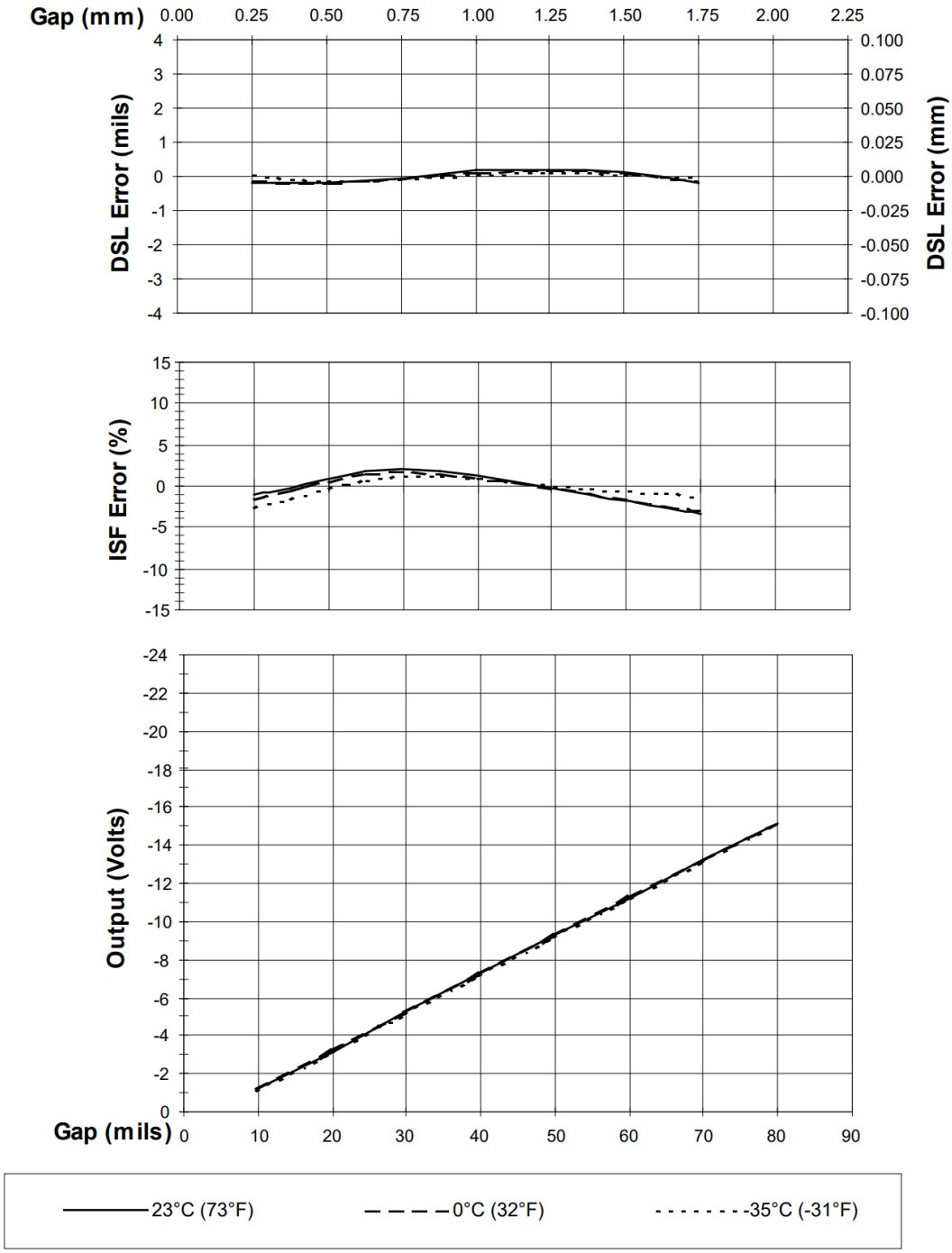

Figure 7: Typical 3300 XL NSv 7 m Proximitor Sensor with 6 m of Extension Cable @ Low Temperature (Probe is at 25°C)

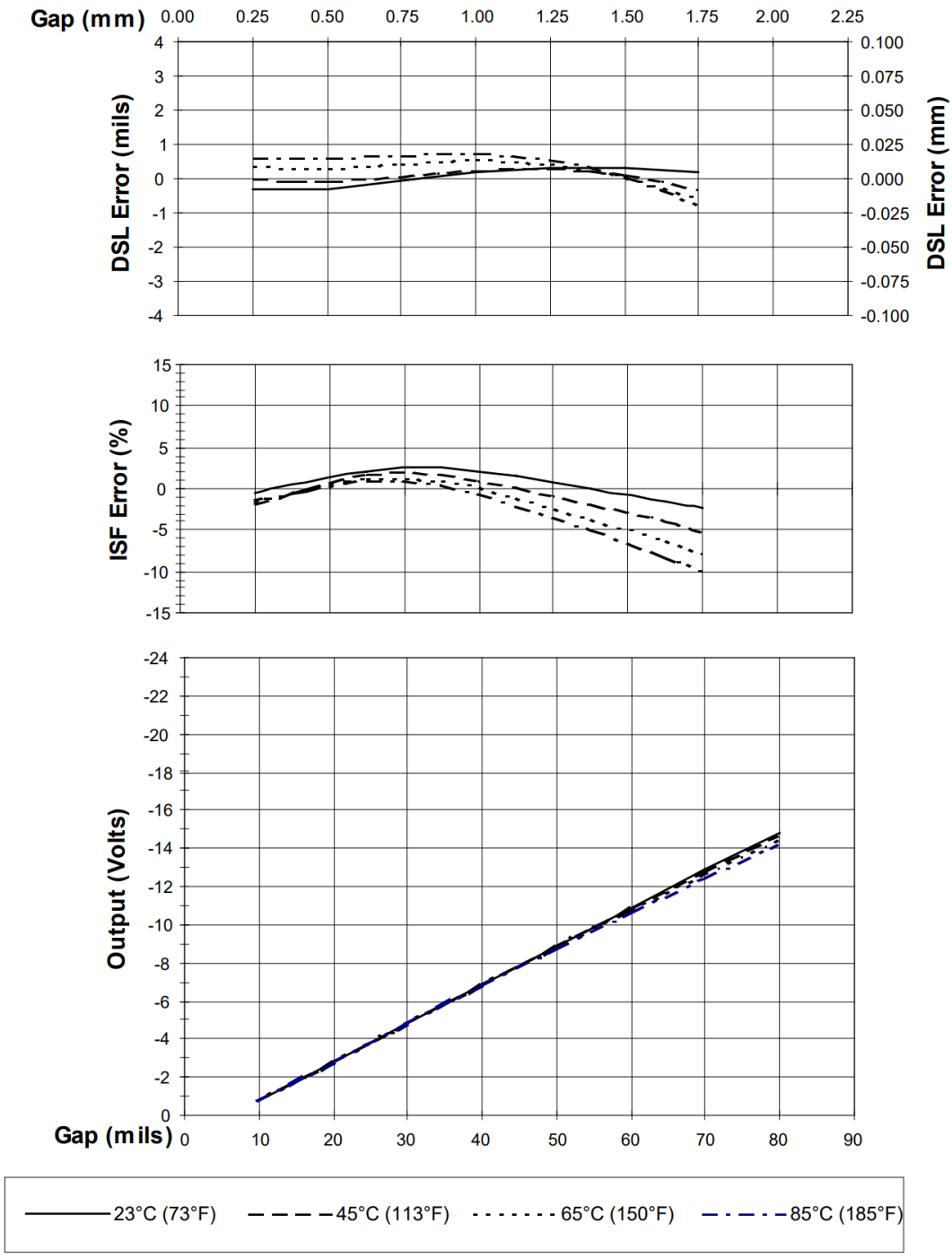

Figure 8: Typical 3300 XL NSv 7 m Proximitor Sensor with 6 m of Extension Cable @ High Temperature (Probe is at 25°C)

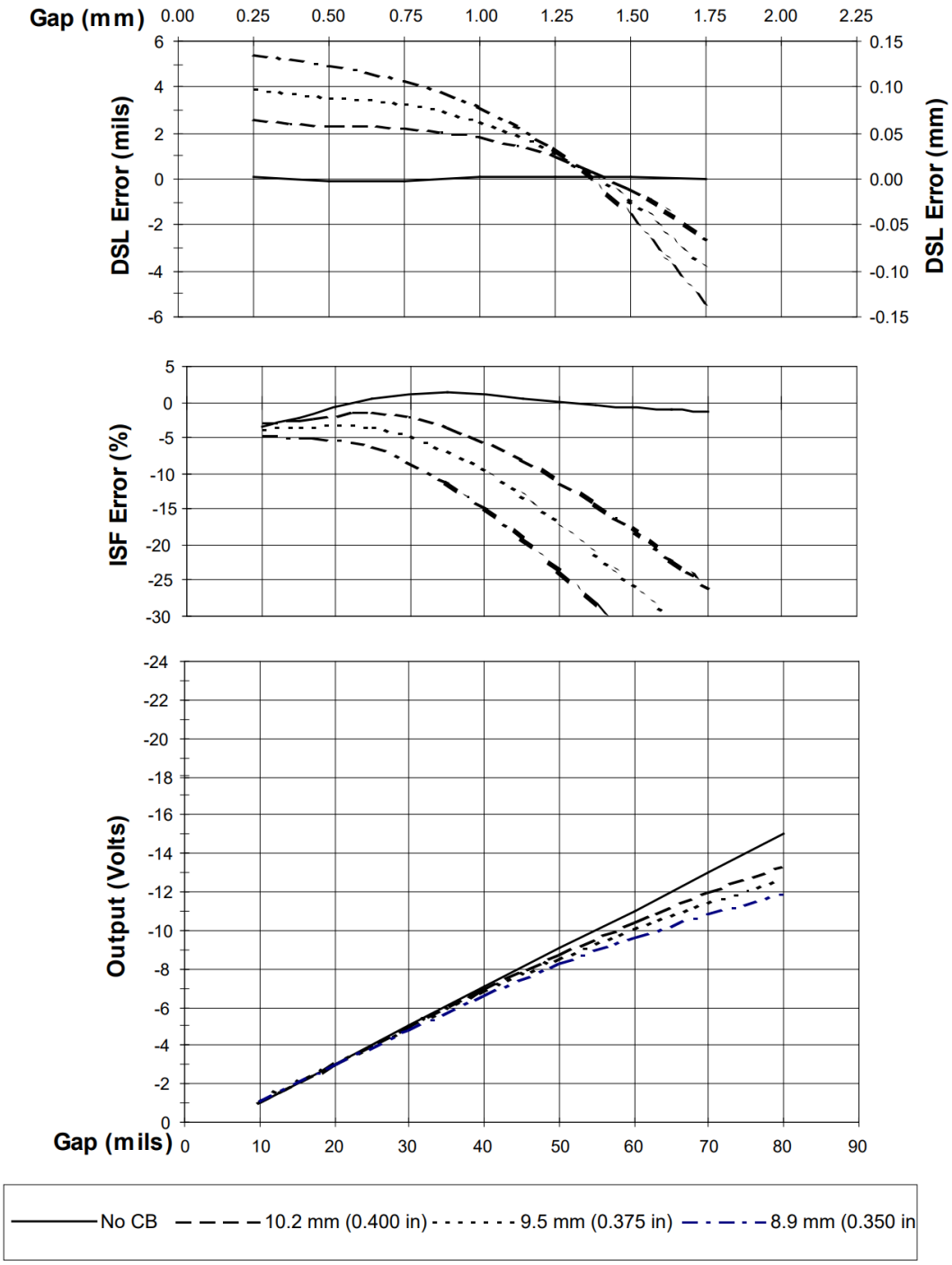

Figure 9: Effect of Counterbore Side Clearance (4140 Material)

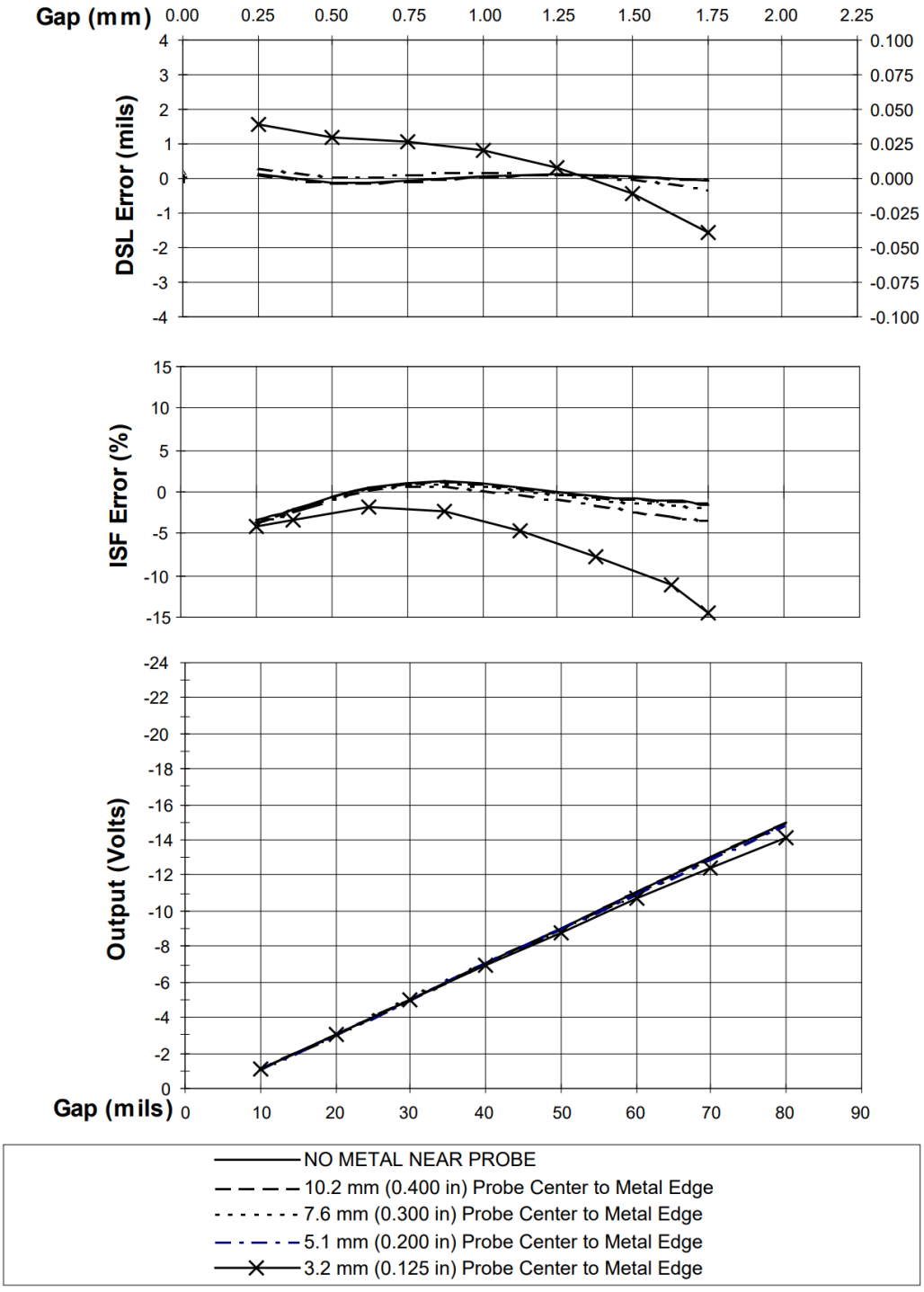

Figure 10: Effect of Flat Surface Side Clearance (4140 Material)

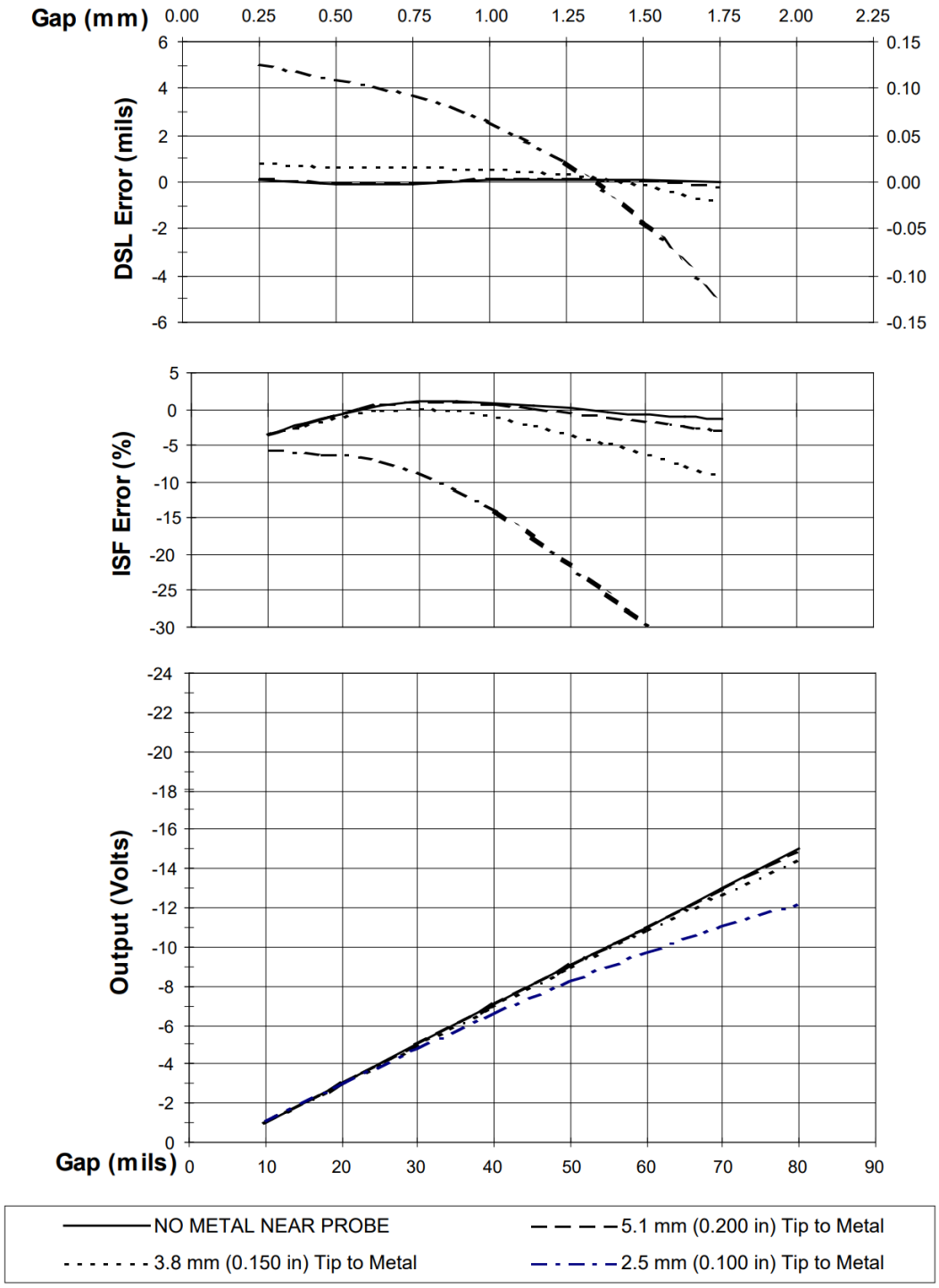

Figure 11: Effect of Rear Surface Clearance (4140 Material)

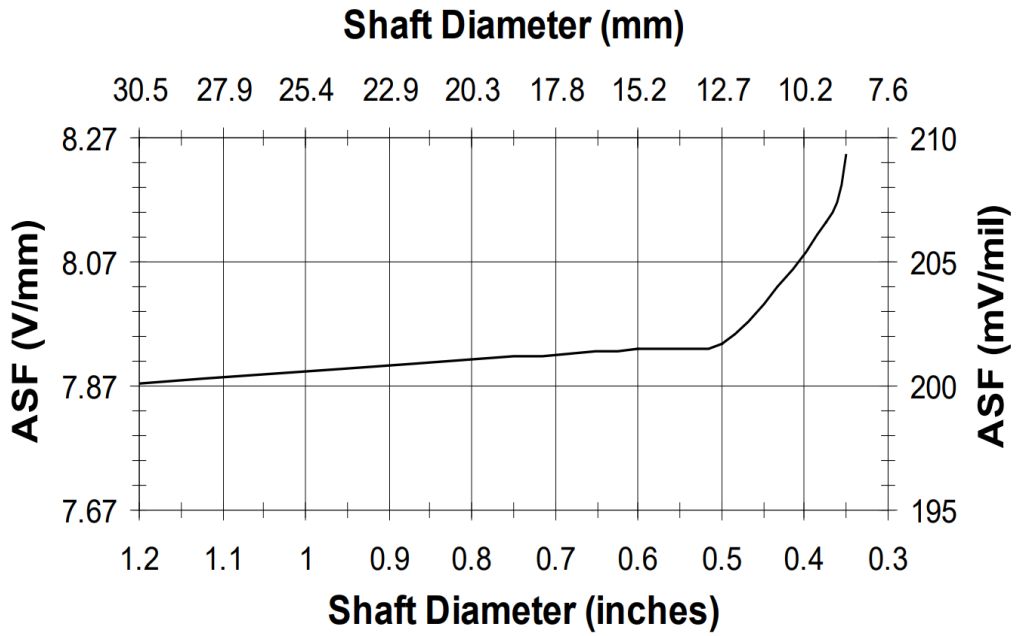

Figure 12: Axial Sensitivity to Shaft Size

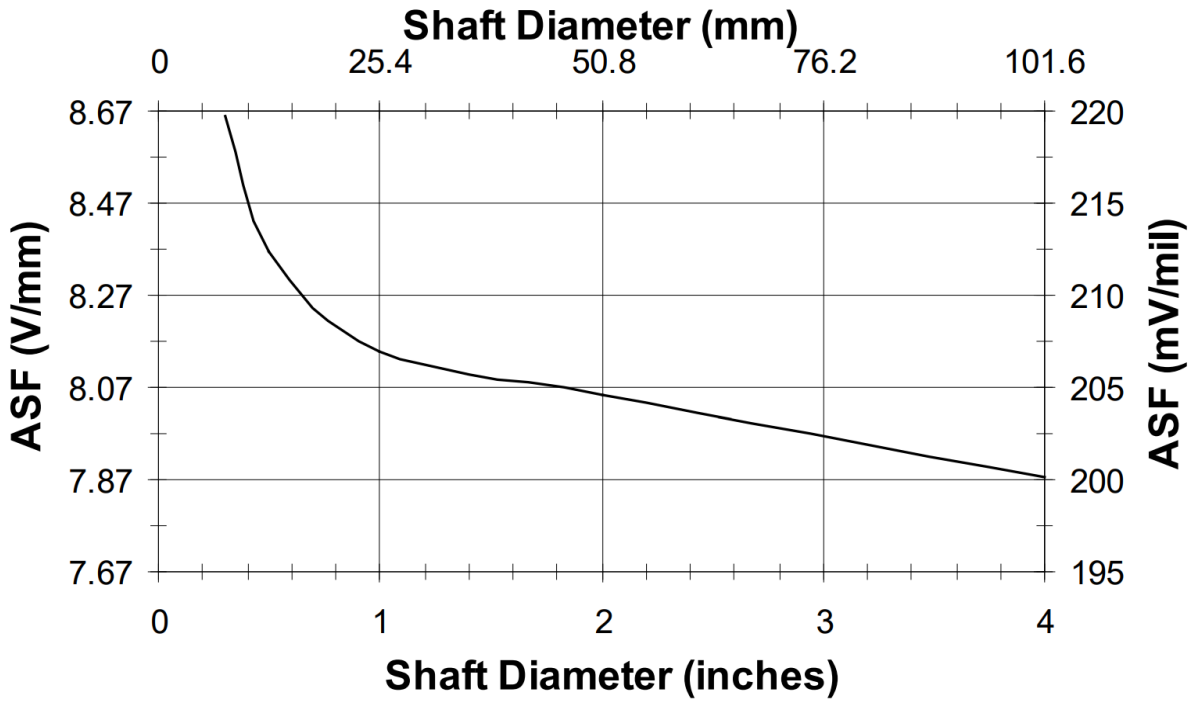

Figure 13: Radial Sensitivity to Shaft Size

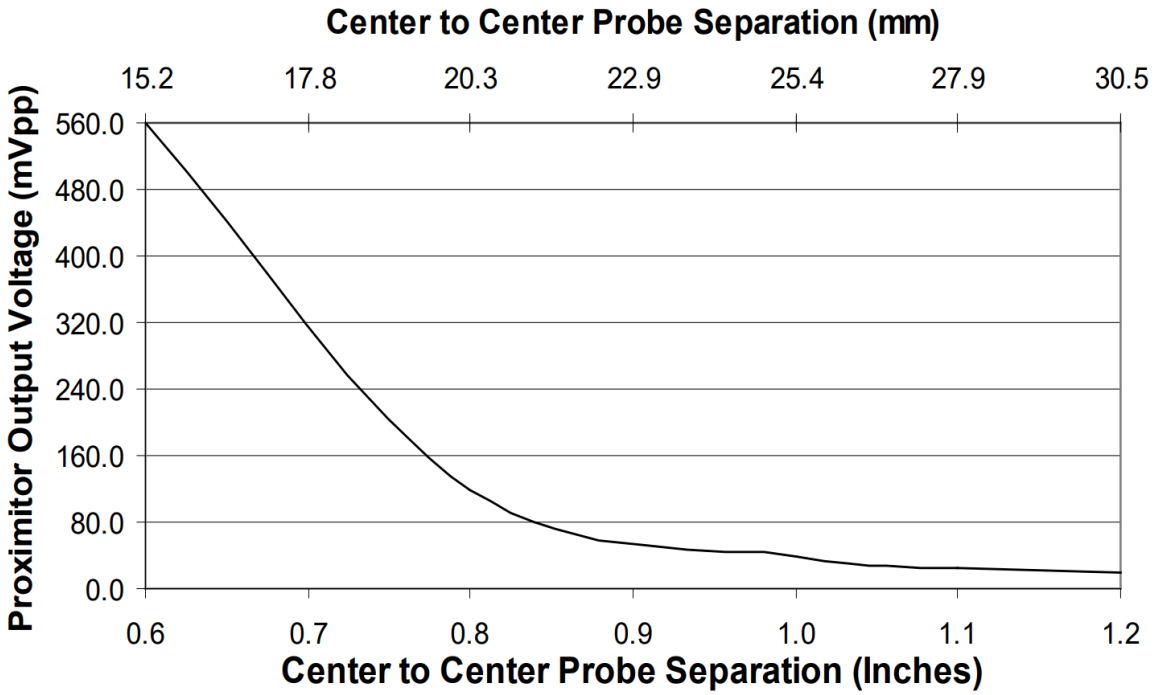

Figure 14: Probe Cross-talk with Probes Mounted in Parallel

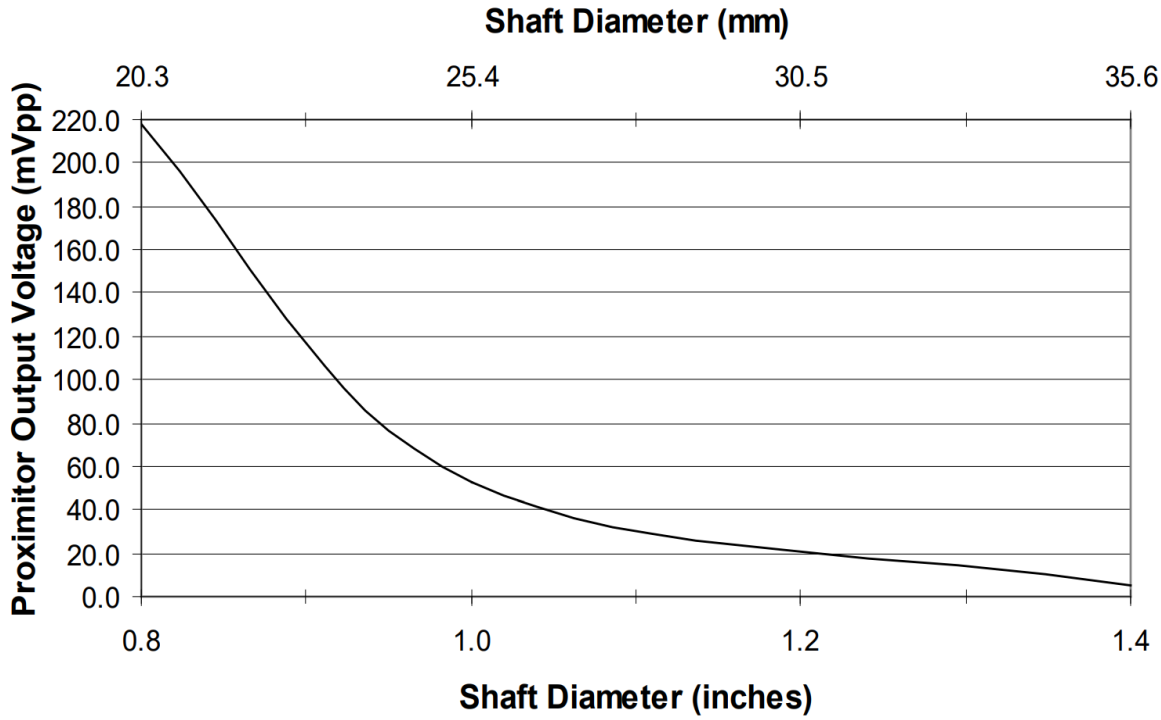

Figure 15: Probe Cross-talk with Probes Mounted in X-Y Configuration

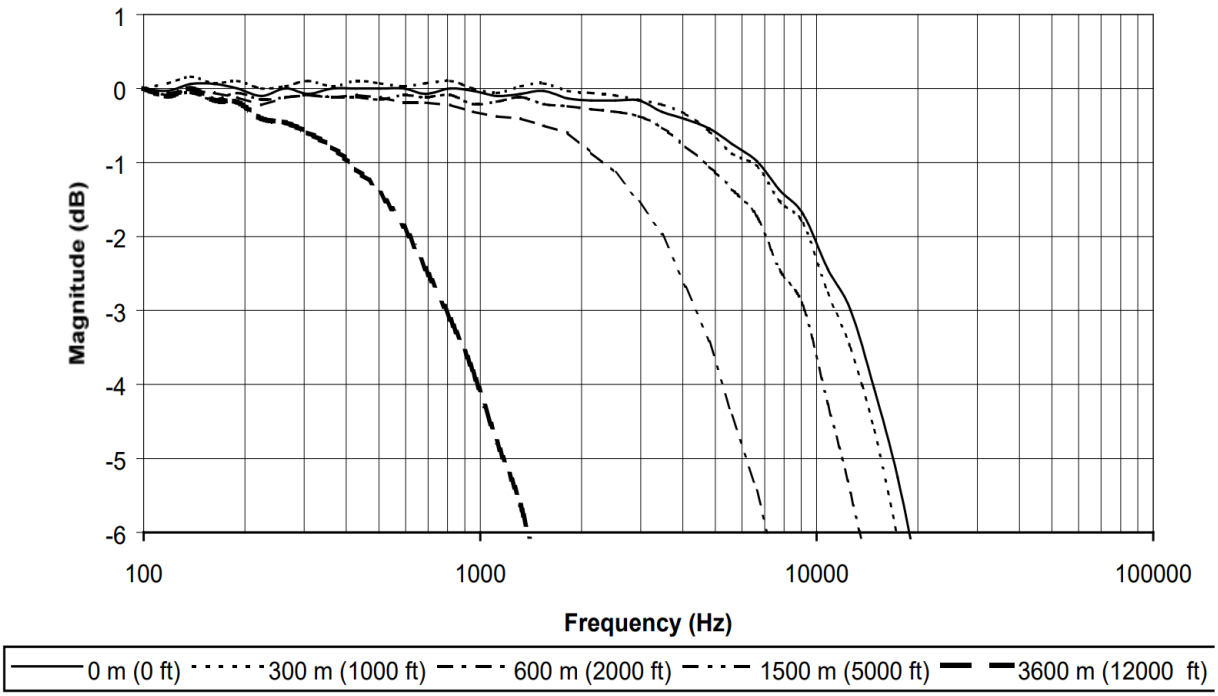

Figure 16: Frequency Response, magnitude of typical 3300 XL NSv System with various lengths of field wiring, no barriers

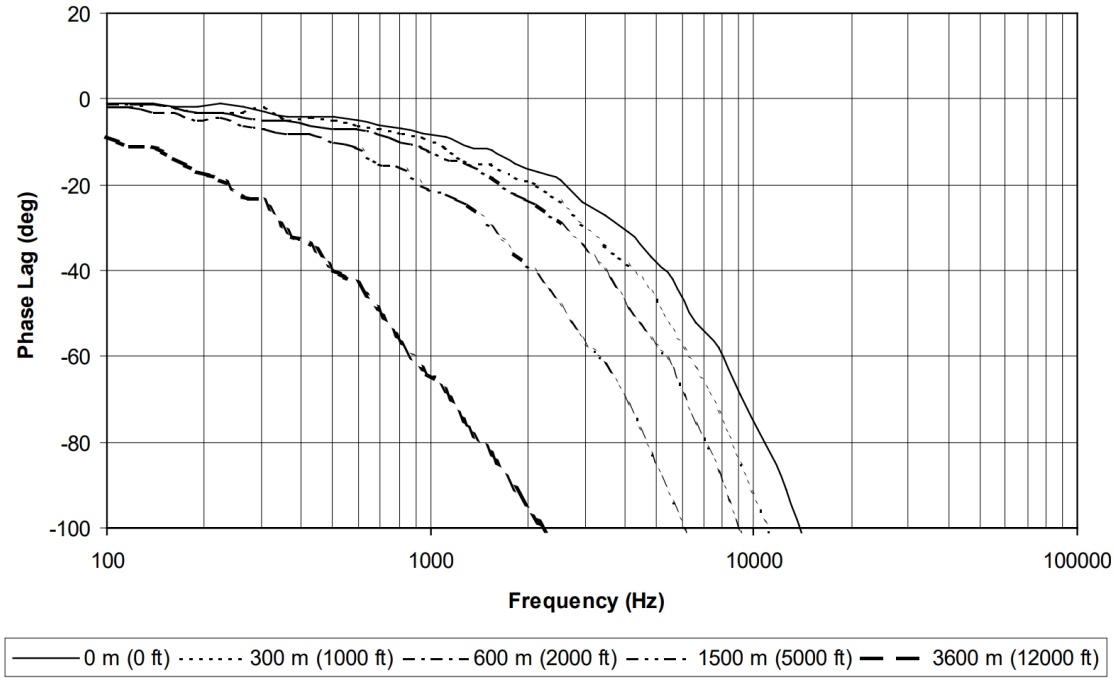

Figure 17: Frequency Response, phase change of typical 3300 XL NSv System with various lengths of field wiring, no barriers

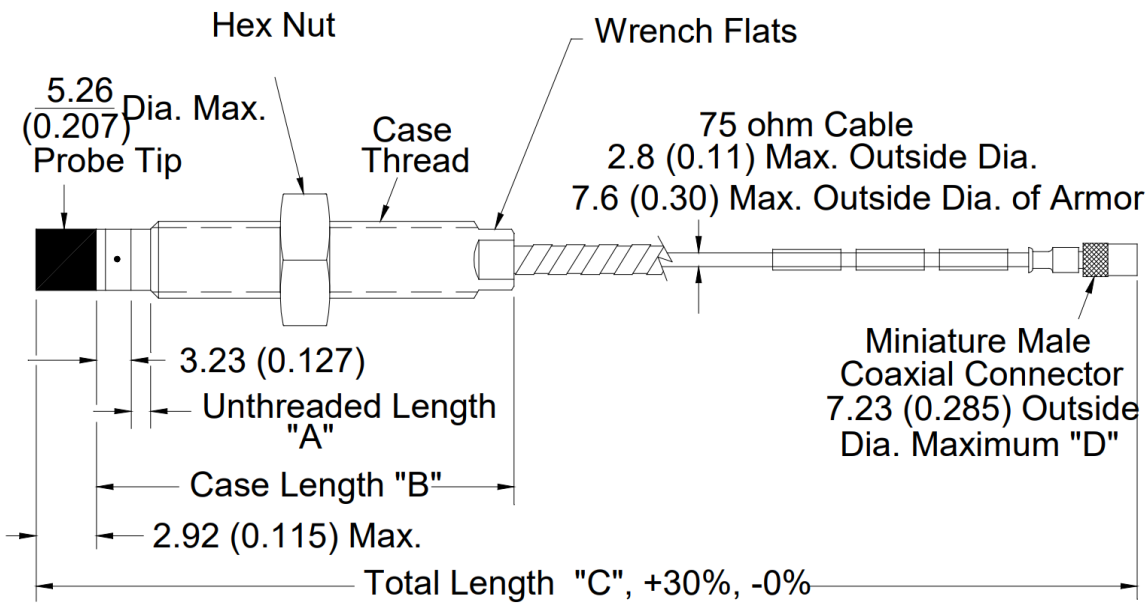

Figure 18: 3300 NSv Proximity probes, Standard Mount

330901, 1/4-28 UNF-2A, without armor

330902, 1/4-28 UNF-2A, with armor

330903, M8X1 thread, without armor

330904, M8X1 thread, with armor

330905, M10X1 thread, without armor

330908, 3/8-24 UNF-2A, without armor

330909, 3/8-24 UNF-2A, with armor

330910, M10X1 thread, with armor

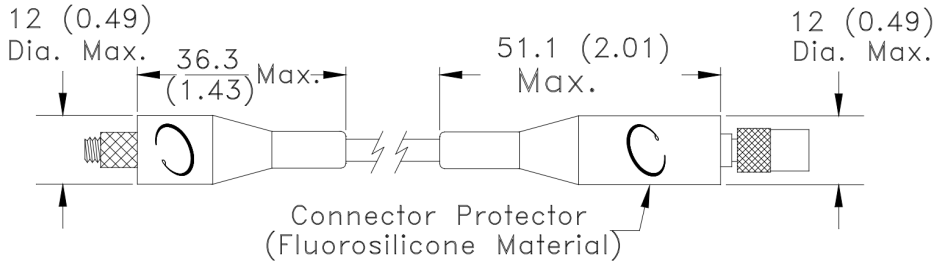

Note: Connector Protector only installed on female end when optioned. Both ends available as accessories.

Figure 19: Installed Connector Protectors

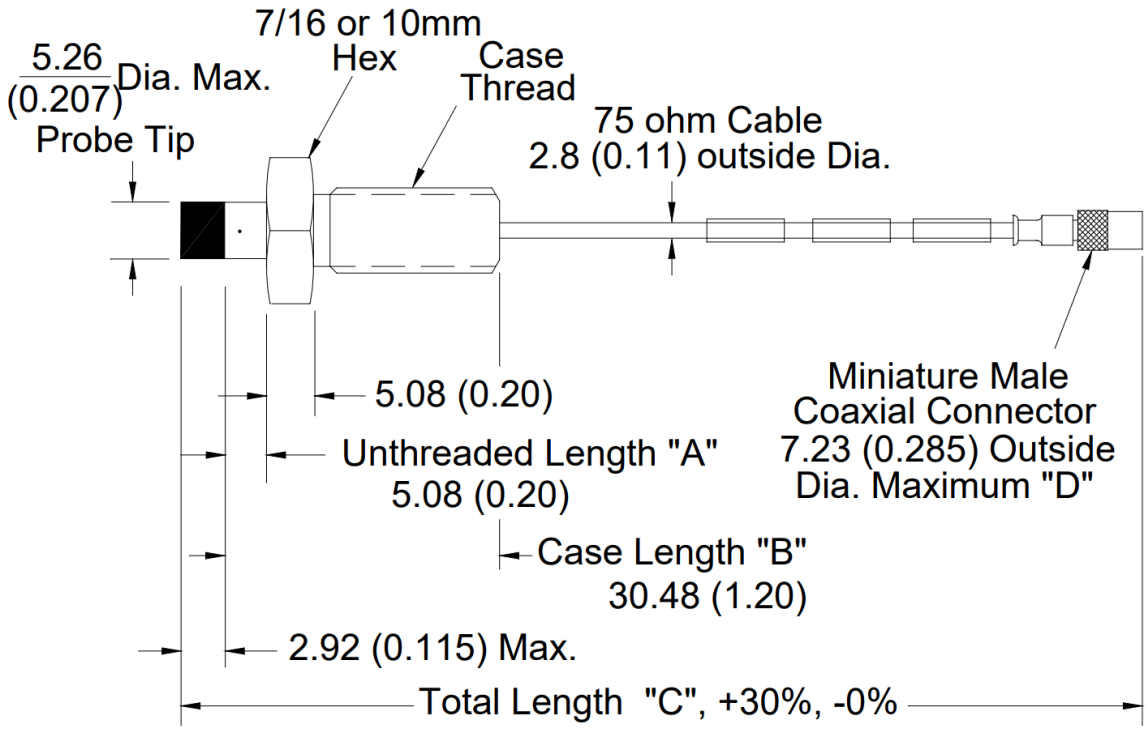

Figure 20: 3300 NSv Proximity Probes, Reverse Mount

330906, 3/8-24 UNF-2A threads

330907, M10X1 threads

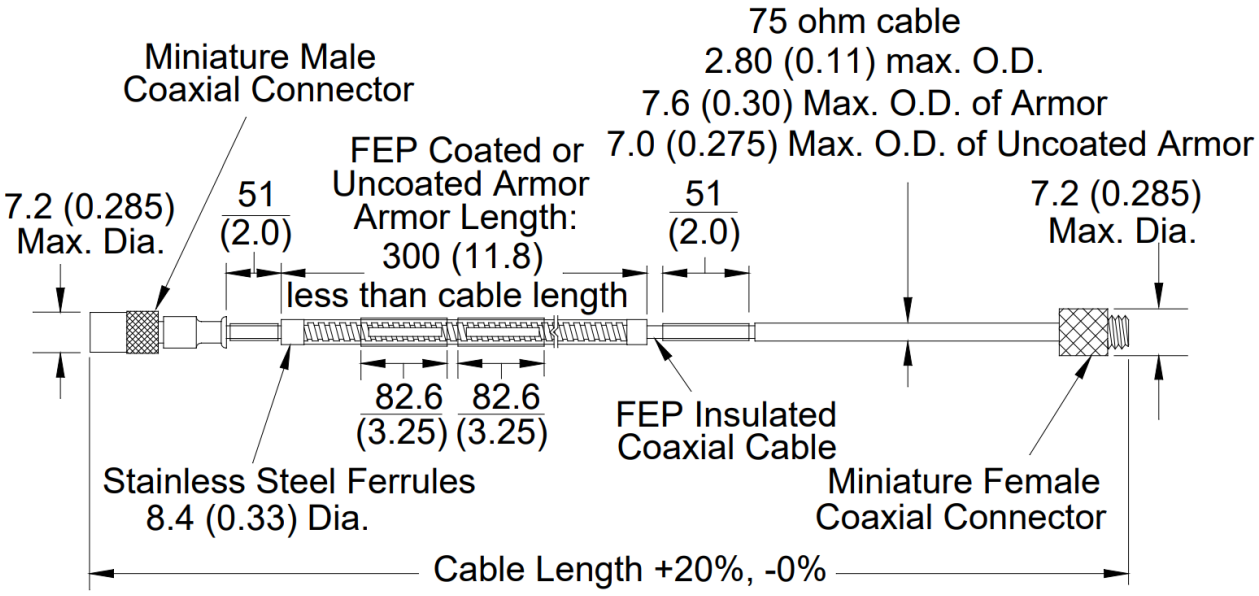

Figure 21: 330930, 3300 NSv Extension Cable

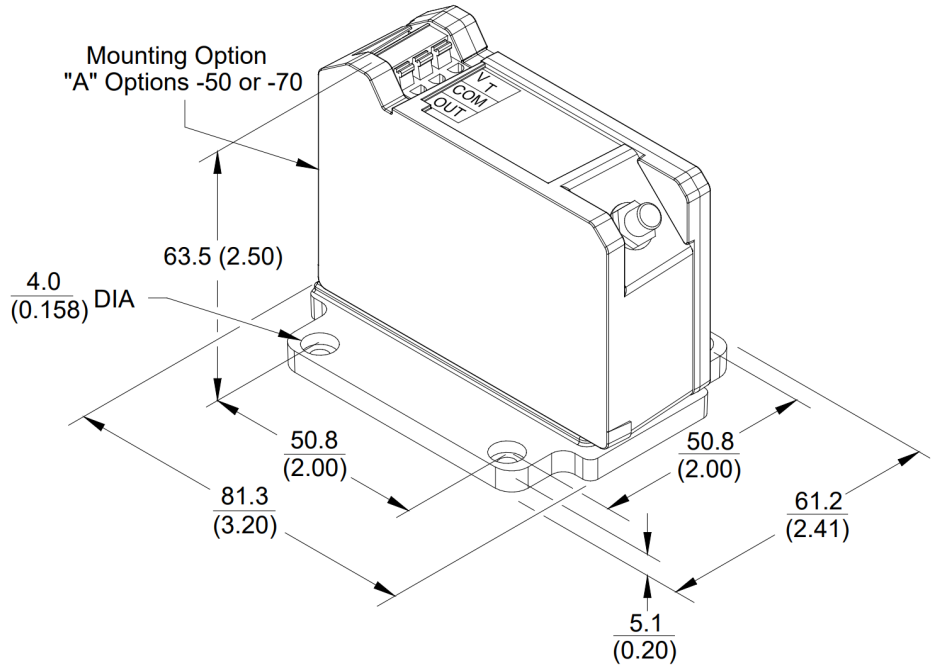

Figure 22: Panel Mount 3300 XL NSv Proximitor Sensor

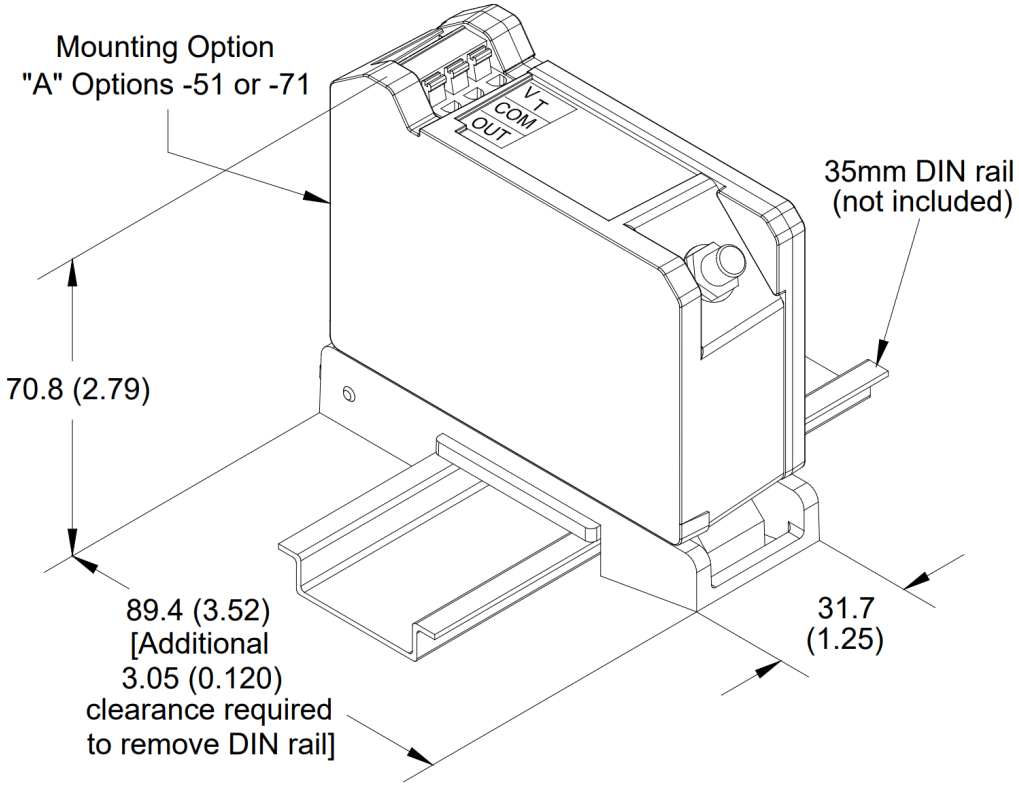

Figure 23: DIN Mount 3300 XL NSv Proximitor Sensor

Notes:

1. All dimensions on figures are in millimeters (inches) unless otherwise noted.
2. Standard mount 1/4 -28 UNF thread probes are supplied with 7/16 inch lock nut and 7/32 wrench flats.
3. Standard mount M8x1 thread probes are supplied with 13 mm lock nut and 7 mm wrench flats.
4. Standard mount 3/8-24 UNF thread probes are supplied with 9/16 inch lock nut and 5/16 wrench flats.
5. Standard mount M10X1 thread probes are supplied with 17 mm lock nut and 8 mm wrench flats.
6. Reverse mount probes are not available with armor or connector protector options.
7. Letters inside quotation marks on figures refer to probe ordering options.
8. Stainless steel armor is supplied with or without FEP outer jacket.
9. FEP jacket is standard on all non-armored probes.

Copyright 2025 Baker Hughes Company. All rights reserved.

Bently Nevada, a Baker Hughes Company

1631 Bently Parkway South, Minden, Nevada USA 89423

https://bntechsupport.com

Enquire about this exact part

Bently Nevada 330909-00-30-10-02-00

Document provenance

The preceding 34 pages reproduce the Bently Nevada source document. This final contact sheet was prepared separately by Apter Power.

Bently Nevada 3300 XL NSv Proximity Transducer System Datasheet, 147385 Rev. R. The ordering table identifies the 330909 construction and five option groups.

Before requesting a quotation

01 Send the full reference: 330909-00-30-10-02-00.

02 Request available probe-label and connector photos.

03 Include the required quantity and available item photos so the offered unit can be checked.

Contact Apter Power

Email: sales13@apterpower.com

Phone / WhatsApp: +86 18030235313

Scan the approved WhatsApp QR code to contact our team.