# 3300 XL 8 mm Proximity Transducer System

## Datasheet

Cordant™

141194 Rev. AN




## Description

The 3300 XL 8 mm Proximity Transducer System consists of:

- One 3300 XL 8 mm probe,
- One 3300 XL extension cable[1], and
- One 3300 XL Proximitor Sensor[2].

The system provides an output voltage that is directly proportional to the distance between the probe tip and the observed conductive surface and can measure both static (position) and dynamic (vibration) values. The system's primary applications are vibration and position measurements on fluid-film bearing machines, as well as Keyphasor reference and speed measurements[3].

The 3300 XL 8 mm system delivers the most advanced performance in our eddy current proximity transducer systems. The standard 3300 XL 8 mm 5-meter system also fully complies with the American Petroleum Institute's (API) 670 Standard for mechanical configuration, linear range, accuracy, and temperature stability. All 3300 XL 8 mm proximity transducer systems provide this level of performance and support complete interchangeability of probes, extension cables, and Proximitor sensors, eliminating the need to match or bench calibrate individual components.

Each 3300 XL 8 mm Transducer System component is backward compatible and interchangeable[4] with other non-XL 3300 series 5 mm and 8 mm transducer system components[5]. This compatibility includes the 3300 5 mm probe, for applications in which an 8 mm probe is too large for the available mounting space[6,7].

Baker Hughes

## Proximitor Sensor

The 3300 XL Proximitor Sensor incorporates numerous improvements over previous designs. Its physical packaging allows you to use it in high-density DIN-rail installations. You can also mount the sensor in a traditional panel mount configuration, where it shares an identical 4-hole mounting “footprint” with older Proximitor Sensor designs. The mounting base for either option provides electrical isolation and eliminates the need for separate isolator plates. The 3300 XL Proximitor Sensor is highly immune to radio frequency interference, allowing you to install it in fiberglass housings without adverse effects from nearby radio frequency signals. The 3300 XL Proximitor Sensor’s improved RFI/EMI immunity satisfies European CE mark approvals without requiring special shielded conduit or metallic housings, resulting in lower installation costs and complexity.

The 3300 XL’s SpringLoc terminal strips require no special installation tools and facilitate faster, more robust field wiring connections by eliminating screw-type clamping mechanisms that can loosen.

## Proximity Probe and Extension Cable

The 3300 XL probe and extension cable also reflect improvements over previous designs. A patented TipLoc molding method provides a more robust bond between the probe tip and the probe body. The probe’s cable incorporates a patented CableLoc design that provides 330 N (75 lbf) pull strength to more securely attach the probe cable and probe tip.

You can also order 3300 XL 8 mm probes and extension cables with an optional FluidLoc cable option. This option prevents oil and other liquids from leaking out of the machine through the cable’s interior.

## Connectors

The 3300 XL probe, extension cable, and Proximitor sensor have corrosion-resistant, gold-plated ClickLoc connectors. These connectors require only finger-tight torque (the connectors will "click" when tight), and the specially-engineered locking mechanism prevents the connectors from loosening. These connectors require no special tools for installation or removal.

You can order the 3300 XL 8 mm probes and extension cables with connector protectors already installed. We can also supply connector protectors separately for field installations (such as when an application must run the cable through restrictive conduit). We recommend connector protectors for all installations to provide increased environmental protection[8].

## Extended Temperature Range Applications

An extended temperature range (ETR) probe and ETR extension cable are available for applications in which either the probe lead or extension cable may exceed the standard 177°C (350°F) temperature specification. The ETR probe has an extended temperature rating for up to 218°C (425°F). The ETR extension cable rating is up to 260°C (500°F). Both the ETR probe and cable are compatible with standard temperature probes and cables, for example, you can utilize an ETR probe with the 330130 extension cable. The ETR system uses the standard 3300 XL Proximitor Sensor. Note that when you use any ETR component as part of your system, the ETR component limits the system accuracy to the accuracy of the ETR system.

### Description Notes:

1. One-meter systems do not use an extension cable.

2. Proximitor sensors are supplied by default from the factory calibrated to AISI 4140 steel. Calibration to other target materials is available upon request.

3. Consult Bently Nevada Applications Note, Considerations when using Eddy Current Proximity Probes for Overspeed Protection Applications, when considering this transducer system for tachometer or overspeed measurements.

# Specifications

Unless otherwise noted, the following specifications are for a 3300 XL 8 mm Proximitor Sensor, extension cable and 8 mm probe between +18°C and +27°C (+64°F to +80°F) at a maximum altitude of 2000 meters, with a -24 Vdc power supply, a 10 kΩ load, an AISI 4140 steel target, and a probe gapped at 1.27 mm (50 mils). Performance characteristics apply to systems that consist solely of 3300 XL 8 mm components. The system accuracy and interchangeability specifications do not apply to transducer systems that are calibrated to any target other than our AISI 4140 steel target.

## Electrical

| | |
|---|---|
| Proximitor Sensor Input | Accepts one non-contacting 3300-series 5 mm, 3300 XL 8 mm Proximity Probe and Extension Cable. |
| Power | Requires -17.5 Vdc to -26 Vdc when installed with non-incendive circuit connected per installation drawing 140979 at 12 mA maximum consumption, -23 Vdc to -26 Vdc with barriers. Operation at a more positive voltage than -23.5 Vdc can result in reduced linear range. |
| Supply Sensitivity | Less than 2 mV change in output voltage per volt change in input voltage. |
| Output Resistance | 50 Ω |

| Nominal Probe DC Resistance | |
|---|---|
| Resistance ($R_{PROBE}$) from Center Conductor to Outer Conductor | |
| **Probe Length (m)** | **$R_{PROBE}$(Ω)** |
| 0.5 | 7.45 ± 0.50 |
| 1.0 | 7.59 ± 0.50 |
| 1.5 | 7.73 ± 0.50 |
| 2.0 | 7.88 ± 0.50 |
| 3.0 | 8.17 ± 0.50 |
| 5.0 | 8.73 ± 0.50 |
| 9.0 | 9.87 ± 0.50 |

| Nominal Extension Cable DC Resistance | |
|---|---|
| Resistance ($R_{CORE}$) from Center Conductor to Center Conductor | |
| **Length of Extension Cable (m)** | **RCORE (Ω)** |
| 3.0 | 0.66 ± 0.10 |
| 3.5 | 0.77 ± 0.12 |
| 4.0 | 0.88 ± 0.13 |
| 4.5 | 0.99 ± 0.15 |
| 6.0 | 1.32 ± 0.21 |
| 7.0 | 1.54 ± 0.23 |
| 7.5 | 1.65 ± 0.25 |
| 8.0 | 1.76 ± 0.26 |
| 8.5 | 1.87 ± 0.28 |

| Connector-to-Connector Recommended Torque | |
|---|---|
| **Connector Type** | **Tightening Instructions** |
| Two 3300 XL gold "click" type connectors | Finger tight |
| One non-XL stainless steel connector and one 3300 XL connector | Finger tight plus 1/8 turn using pliers |
| **Materials** | |
| Proximitor Sensor Material | A308 aluminum |
| Connector Material | Gold-plated brass or gold-plated beryllium copper. |
| **Length** | |
| System Length | 5 or 9 meters (including extension cable) or 1 meter (probe only). |
| **Weight** | |
| Total System Weight (Typical) | 0.7 kg (1.5 lb m) |
| Probe | 323 g/m (11.4 oz) |
| Extension Cable | 34 g/m (0.4 oz/ft) |
| Armored Extension Cable | 103 g/m (1.5 oz/ft) |
| Proximitor Sensor | 246 g (8.67 oz) |

## Thread Engagement Limits

| Probe Case Thread | Maximum Length of Thread Engagement |
|---|---|
| **3/8-24** | 0.563 in |
| **M10x1** | 15 mm |

Maximum thread engagement lengths are per the industry standard of 1.5 times the nominal thread diameter. A fit class matching that of the external probe thread is assumed for all internal threads. Applications with thread engagement lengths exceeding the values in the table above may exhibit binding during installation. Contact your Bently Nevada representative if you require probe thread engagement lengths exceeding the values above. Bently Nevada does not replace proximity probes under warranty due to excessive thread engagement lengths.

## Environmental Limits

| Probe Temperature Range | |
|---|---|
| **Operating and Storage Temperature** | |
| Standard Probe | -52°C to +177°C (-62°F to +350°F) |
| Extended Temperature Range Probe | -52°C to +218°C (-62°F to +425°F) for the probe tip; -51°C to +260°C (-60°F to +500°F) for the probe cable and connector. |

Exposing the probe to temperatures below –34˚C (-30˚F) may cause premature failure of the pressure seal.

| Probe Pressure |
|---|
| 3300 XL 8 mm probes are designed to seal differential pressure between the probe tip and case. The probe sealing material consists of a Viton® O ring. Probes are not pressure tested prior to shipment. Contact our custom design department if you require a test of the pressure seal for your application. |

It is the responsibility of the customer or user to ensure that all liquids and gases are contained and safely controlled should leakage occur from a proximity probe. In addition, solutions with high or low pH values may erode the tip assembly of the probe causing media leakage into surrounding areas. Bently Nevada does not be held responsible for any damages resulting from leaking 3300 XL 8 mm proximity probes. In addition, 3300 XL 8 mm proximity probes does not be replaced under the service plan due to probe leakage.

| Extension Cable Temperature Range | |
|---|---|
| **Operating and Storage Temperature** | |
| Standard Cable | -52°C to +177°C (-62°F to +350°F) |
| Extended Temperature Range Cable | -52°C to +260°C (-62°F to +500°F) |

| Proximitor Sensor Temperature Range | |
|---|---|
| Operating Temperature | -52°C to +100°C (-62°F to +212°F) |
| Storage Temperature | -52°C to +105°C (-62°F to +221°F) |

| Probe Relative Humidity |
|---|
| Less than a 3% change in Average Scale Factor (ASF) when tested in 93% humidity in accordance with IEC standard 68 2 3 for up to 56 days. |

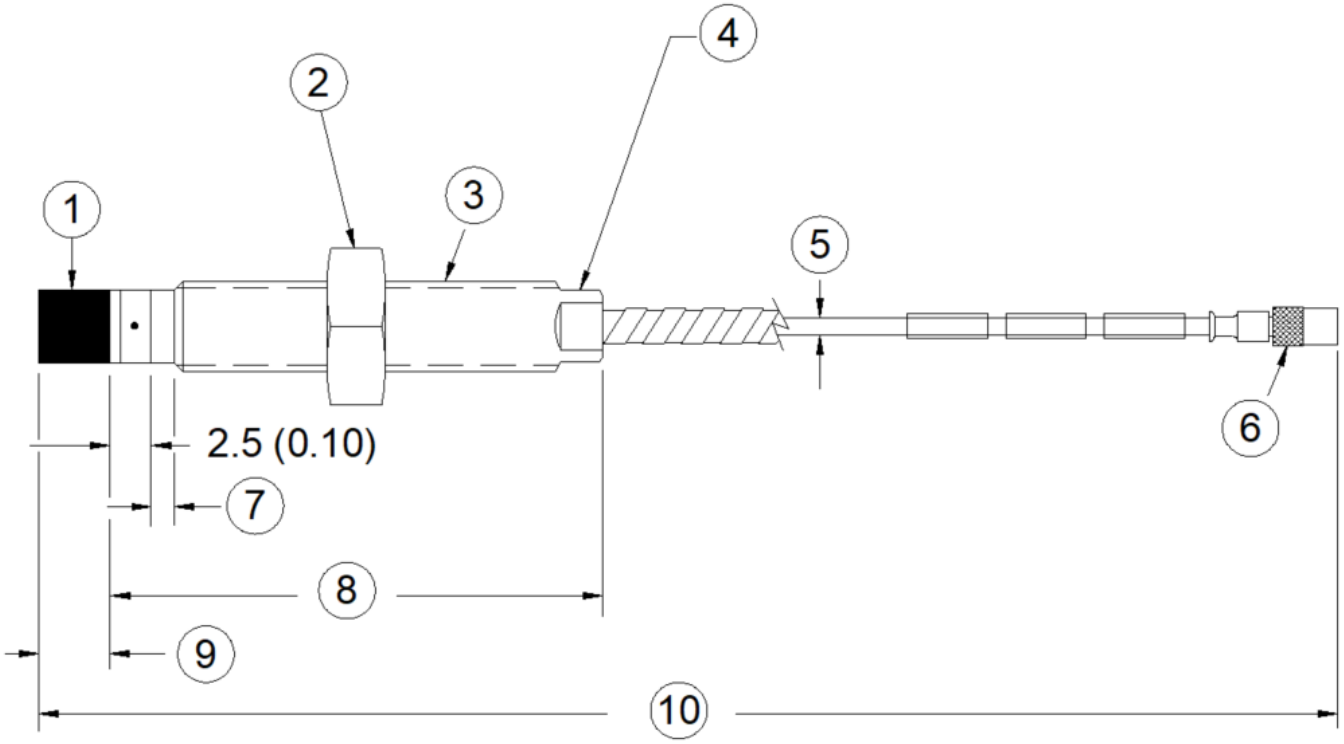


1. Probe tip, 8.0 mm (0.31 in) diameter
2. 9/16 in for 3/8-24 threads, M17 for M10 threads (see Note 2)
3. Case thread
4. 5/16 in wrench flats for 3/8-24 threads; 8mm wrench flats for M10 threads.
5. 75 Ω cable, 3.68 mm (0.145 in) maximum outside diameter, 3.94 mm (0.155 in) maximum outside diameter for FluidLoc cable, 7.67 mm (0.302 in) outside diameter of armor, 9.5 mm (0.38 in) maximum diameter of armor ferrule
6. Miniature male coaxial connector, 7.24 mm (0.285 in) maximum outside diameter “D”
7. Unthreaded length “A”
8. Case length “B”
9. 6.0 mm (0.235 in) maximum
10. Total length “C”, +30%, -0%[3]

**Figure 14: 3300 XL 8 mm Proximity Probes, Standard Mount**

330101 and 330191, 3/8-24 UNF-2A, without armor [7]

330102 and 330192, 3/8-24 UNF-2A, with armor [6]

330103 and 330193, M10X1 thread, without armor [7]

330104 and 330194, M10X1 thread, with armor [6]