1 Technical Description

1.1 Application

The IM 304 interface module can be used in the central controllers S5-115U, S5-115F, S5-115H, S5-135U, S5-150U, S5-150H, S5-155U and S5-155H. On the central controller side, it is used for the symmetrical transmission of the central controller bus to the expansion units with a 16-bit address and 16-bit data bus (EG 185, EG 186). On the expansion unit side, the IM 314 interface module is required. Fault tolerant systems require the IM 314H or IM 314R.

The 16-bit address bus and 16-bit data bus are transmitted multiplexed on 16 common lines. The IM 304 interface module is also used in fault tolerant systems to connect the redundant central controllers. (Parallel interface IM 304 - IM 324).

1.2 Interfacing with other Devices

The IM 304 and IM 314 (H/R) interface modules can be used to interface with the following devices:

1.2.1 Symmetrical Interface from SIMATIC S5 Central Controllers (CCs) to SIMATIC S5 Expansion Units (EGs)

This permits (in conjunction with the EG 185, EG 186 and ER 701-3) the use of peripheral (I/O) modules, communications processors (CPs) and intelligent peripheral modules (IPs) in a distributed configuration. On the expansion unit side, the IM 314-3UA11 interface module must be used for this interface.

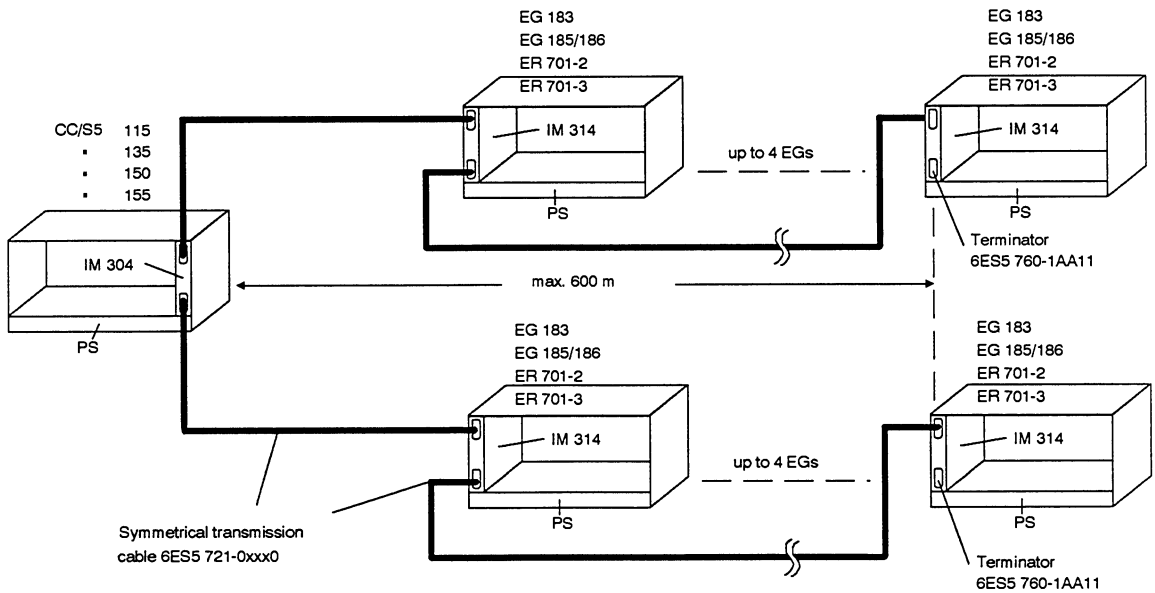

Fig. 1 Distributed configuration with the symmetrical interface IM 304 - IM 314

© Siemens AG C79000-B8576-C716-02

1.2.2 Parallel Interface between Central Controllers in the Fault Tolerant SIMATIC S5 System

The IM 304 interface module can be used in the CCs S5-115F, S5-115H, S5-150H and S5-155H. At the other end of the link, the IM 324-3UAxx (in the S5-115F, S5-150H) or IM 324-3URxx (in the S5-155H, 115H) must be used. The link is only possible via the X4 interface (lower front connector).
The IM 304 interface module provides the following functions:

- bidirectional transmission of process-related data between the two central controllers,
- recognition of transmission errors by parity checks and monitoring of the data and addresses (only for S5-115F, S5-150H). This function is not possible when the module is used in the S5-115H/155H).

1.2.3 Symmetrical Interface from Central Controllers to Expansion Units in the Fault Tolerant SIMATIC S5 System

In this configuration, the IM 304 interface module is served by the IM 314H or IM 314R interface module on the expansion unit side of the connection.

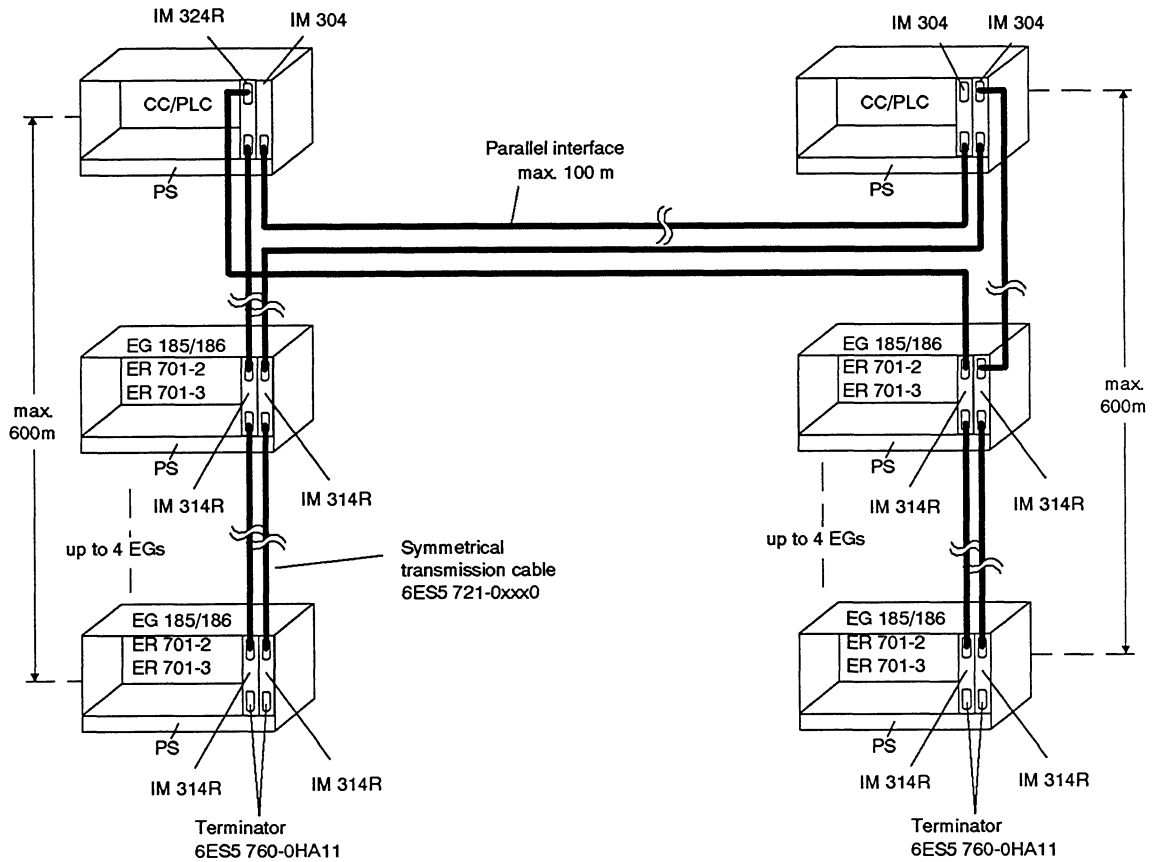

© Siemens AG C79000-B8576-C716-02

1.3 Transmission Mode

The symmetrical interface corresponds to the IEA Standard RS 485.

It is constructed with symmetrical transmitters and receivers. Control signals, addresses and data are input and output via the cable. The monitoring signals PEU (peripheral not ready) and ZGU (central controller not ready) are excluded from this procedure and are transmitted as isolated signals using optocouplers.

The address and data width is 16 bits (bidirectional). The transmission is in the time division multiplex mode. Control and monitoring signals are transmitted separately.

1.4 Design

The IM 304 interface module is mounted on a board of double Eurocard (233.4 mm x 160 mm) height. It occupies 1 1/3 standard slots in the subrack. The connection to the S5 bus in the CC is via two 48-pin connectors conforming to DIN 41612, row 2. On the front panel there are two 50-pin D-connectors to connect the symmetrical cable and two LEDs.

The connection from the CCs to the EGs and between the EGs is established with prefabricated cables via the front connectors (for order number see Section 4, Spare Parts). The front connectors must be locked in place by sliding the metal catch. The assignment of front connectors to the modules must be adhered to.

© Siemens AG C79000-B8576-C716-02

1.5 Technical Specifications

– Power supply	+5V +/-5%
– Current consumption	IM 304 approx. 1.2 A IM 314 approx. 1.0 A
– Cable length	
– from IM 304 to IM 324U (only on interface X4)	max. 100 m
– from IM 304 to IM 324 R (only on interface X4)	max. 10 m
– from IM 304 to last IM 314 (per interface)	max. 600 m
– from IM 304 to last IM 314H/R (per interface)	max. 600 m
– IM 304 can be used in	S5-115U,S5-135U,S5-150U, S5-155U, S5-115F,S5-115H,S5-150H, S5-155H,
– Number and type of interface	2 parallel, symmetrical interfaces
– Transmission rate	2 Mbytes...100 kbytes/sec.
– Signal level at cable interface	Differential signal according to RS485
– Backplane connector	Two 48-pin ES 902, row 2
– Front connector	Two 50-pin male connectors
– Front panel width	20.32 mm (1 1/3 standard slots)
– Dimensions	160 x 233.4 mm^2
– Weight	IM 304: approx. 360 g IM 314: approx. 300 g
– Environmental conditions:	
– Operating temperature range	0 to +55°C
– Storage/transport	-40° to +70°C
– Relative humidity max.	95% at 25°C, no condensation
– Operating altitude max.	1500 m above sea level

© Siemens AG C79000-B8576-C716-02

2 Installation

The IM 304 can be plugged into the central controller of the S5-115U, S5-115F, S5-115H, S5-135U, S5-150U, S5-150H, S5-155U and S5-155H. The module is used for symmetrical connection of expansion units.

2.1 Notes on Installation

The maximum cable length per interface from the IM 304 in the CC to the last IM 314 or IM 314H/R in the EG is 600 metres. The actual cable length must be set at the IM 304 (see Section 2.4).

A maximum of four IM 314 or IM 314H/R interface modules can be connected per interface.

The IM 314 interface module of the last expansion unit of each group must be terminated with the terminator 6ES5 760-**1AA11**.

The IM 314H/R interface module of the last expansion unit is terminated with terminator 6ES5 760-**0HA11**.

Connection with the IM 324

The connection to the second CC up to a distance of maximum 100 m with the IM 324U/R is only possible via the front connector X4.

Connecting cable 6ES5-721-xxx (length key see Section 4, Spare Parts) is available to connect CCs or EGs with each other.

2.2 Permitted Potential Differences

To ensure the connection functions reliably, the potential differences between two S5 devices must not exceed **7 V. An equipotential bonding conductor should be connected.**

© Siemens AG C79000-B8576-C716-02

2.4 Operating Modes / Jumper Settings on the IM 304 (6ES5 304-3UB11)

2.4.1 Jumper Settings

X11: Adapting to various cable lengths

	Jumper plug X11				
Jumper setting	9 7 5 3 1 *) 10 8 6 4 2	9 7 5 3 1 10 8 6 4 2	9 7 5 3 1 10 8 6 4 2	9 7 5 3 1 10 8 6 4 2	9 7 5 3 1 10 8 6 4 2
Cable length	max. 10 m	10 - 100 m	100 - 250 m	250 - 450 m	450 - 600 m

*) This setting is only permitted for the IM 304 - IM 324R link in the S5-155H.

The longest connection at interface X3 or X4 is determined by the jumper setting at X11.

Symmetrical connection CC - EG with IM 304/IM 314 (S5-115U, S5-135U, S5-150U, S5-155U)

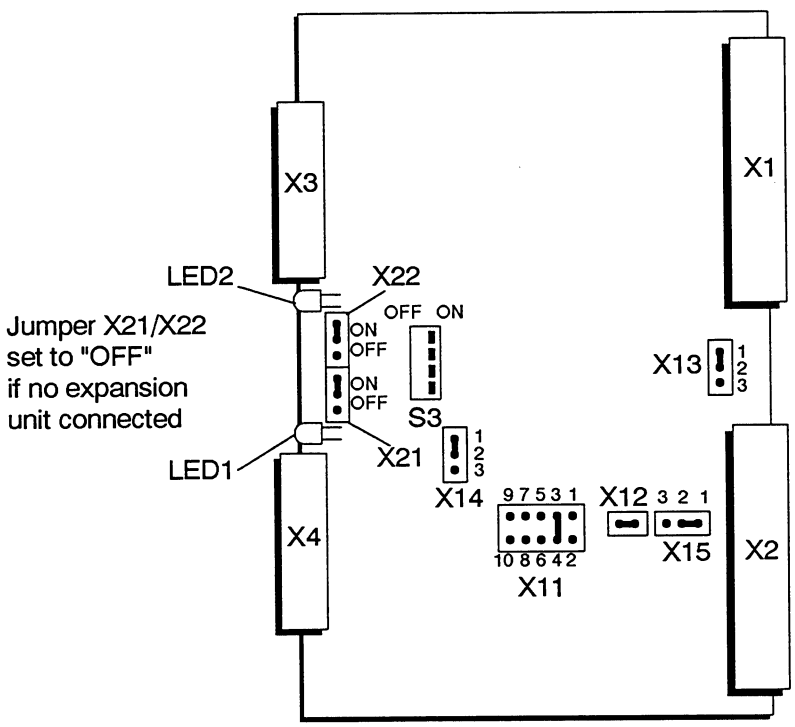

Jumpers as set at the factory

© Siemens AG C79000-B8576-C716-02

Symmetrical connection CC - EG with IM 304/IM 314R (S5-115H, S5-155H)

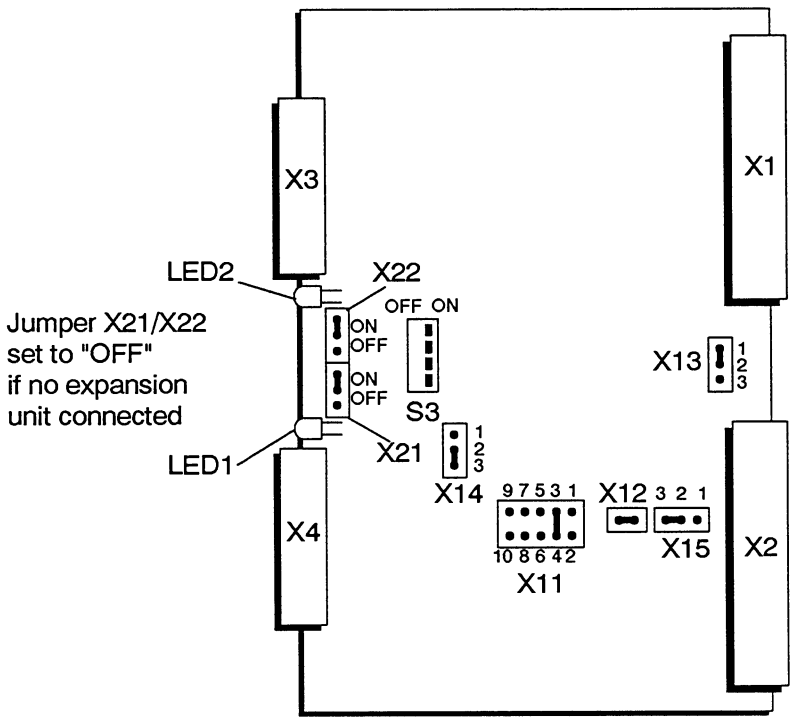

Parallel connection CC - CC with IM 304/IM 324R (S5-115H, S5-155H)

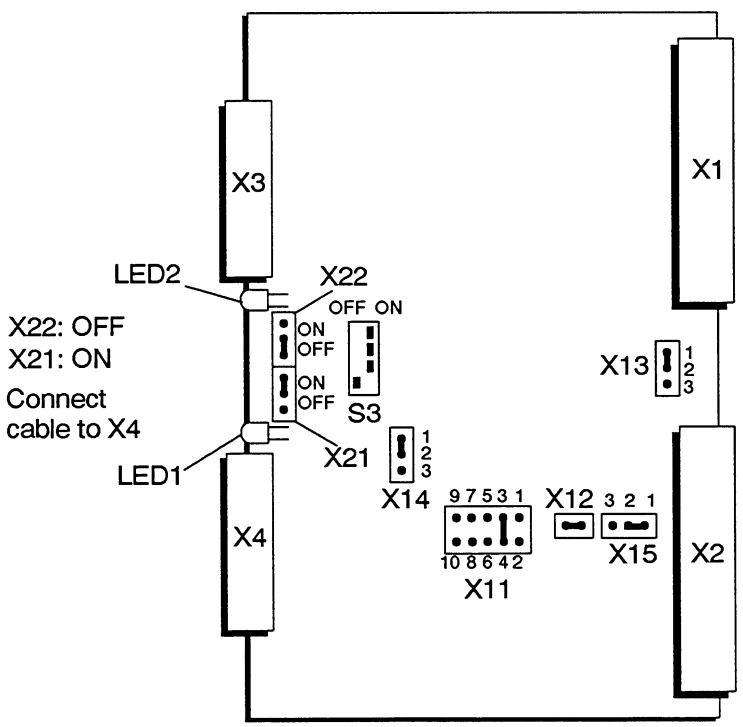

© Siemens AG C79000-B8576-C716-02

Symmetrical connection CC - EG with IM 304/IM 314H (S5-150H)

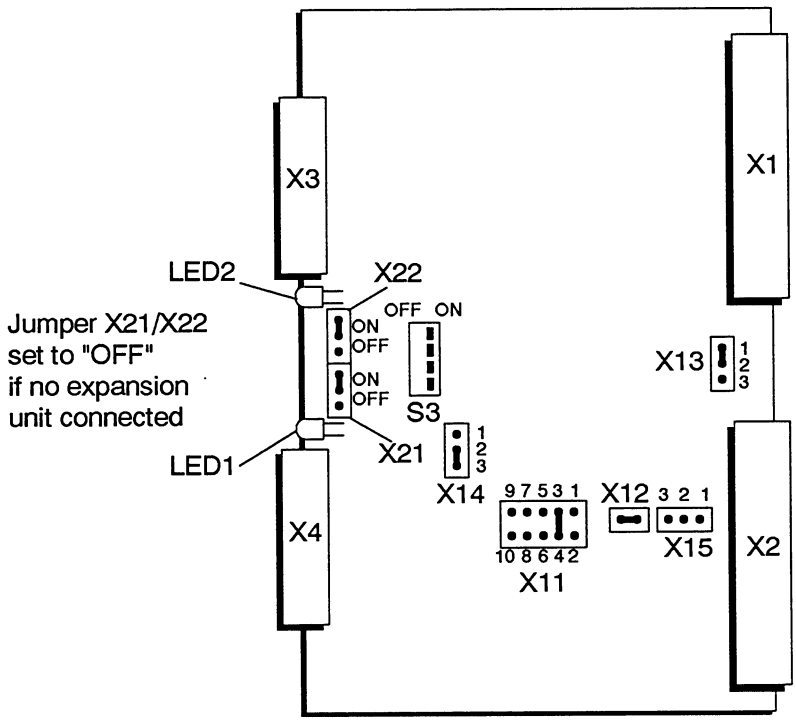

Parallel connection CC - CC with IM 304/IM 324U (S5-115F, S5-150H)

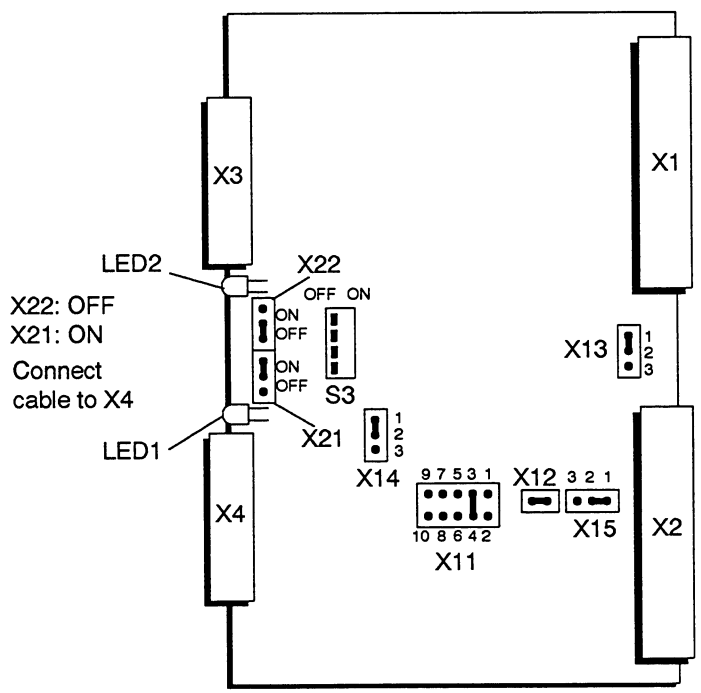

The cable length of the connection between the IM 304 and IM 324U must not exceed 100 m and between the IM 304 and IM 324R must not exceed 10 m. To connect the IM 304 and IM 324 or IM 324R, only the lower interface (X4) can be used. Jumper X2 must be set to "OFF".

© Siemens AG C79000-B8576-C716-02