Properties

1

1.1 Digital electronic module 8DI DC24V (6ES7131-4BF00-0AA0)

Properties

- Digital electronic module with eight inputs
- Nominal input voltage 24 VDC
- Suitable for connecting 2-wire sensors
- Supports isochronous operation

Requirements for operation

It is possible to operate the 8DI DC24V digital electronic module using the following interface modules with the order numbers specified (or higher). The interface modules listed in the table are not subject to any constraints.

Interface module	Order number (or higher)	Firmware version (or higher)
IM 151-1 STANDARD	6ES7151-1AA03-0AB0	---
IM 151-1 FO STANDARD	6ES7151-1AB02-0AB0	---
IM 151-1 HIGH FEATURE	6ES7151-1BA01-0AB0	V2.1.3
IM 151-3 PN IM 151-3 PN HIGH FEATURE IM 151-3 PN FO	6ES7151-3AA20-0AB0 6ES7151-3BA20-0AB0 6ES7151-3BB21-0AB0	V4.0.1

General terminal assignment

Note

Terminals A4, A8, A3 and A7 are only available at specified terminal modules.

Terminal assignment for 8DI DC24V (6ES7131-4BF00-0AA0)				
Terminal	**Assignment**	**Terminal**	**Assignment**	**Notes**
1	DI_0	**5**	DI_1	• DI_n: Input signal, Channel n • AUX1: Sensor power supply 24 VDC (for example from power module) or potential bus (can be used freely up to 230 VAC)
2	DI_2	**6**	DI_3	
3	DI_4	**7**	DI_5	
4	DI_6	**8**	DI_7	
A4	AUX1	**A8**	AUX1	
A3	AUX1	**A7**	AUX1	

Usable terminal modules

Usable terminal modules for 8DI DC24V (6ES7131-4BF00-0AA0)		
TM-E15C26-A1 (6ES7193-4CA50-0AA0)	TM-E15C24-01 (6ES7193-4CB30-0AA0)	← Spring terminal
TM-E15S26-A1 (6ES7193-4CA40-0AA0)	TM-E15S24-01 (6ES7193-4CB20-0AA0)	← Screw-type terminal
TM-E15N26-A1 (6ES7193-4CA80-0AA0)	TM-E15N24-01 (6ES7193-4CB70-0AA0)	← Fast Connect
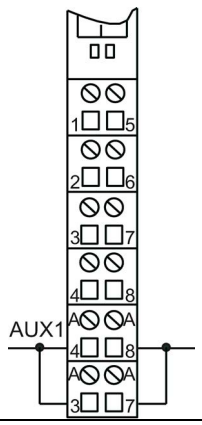	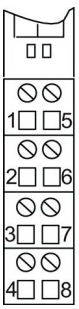	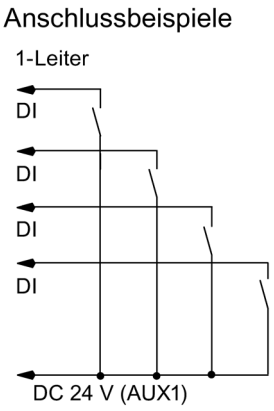

Two-wire connection

The following configuration example shows a two-wire connection with the electronic modules 8DI DC24V. You require further terminals so that sufficient terminals are available for the 24 VDC sensor power supply when the TM-E15S26-A1 terminal modules are used. In the example this is implement by the add-on terminal TE-U120S4x10. Per add-on terminal, terminal modules of the same height must exist across a minimum width of 120 mm. You can naturally also use other terminals for this configuration (for example, ET 200S potential distribution module 4POTDIS).

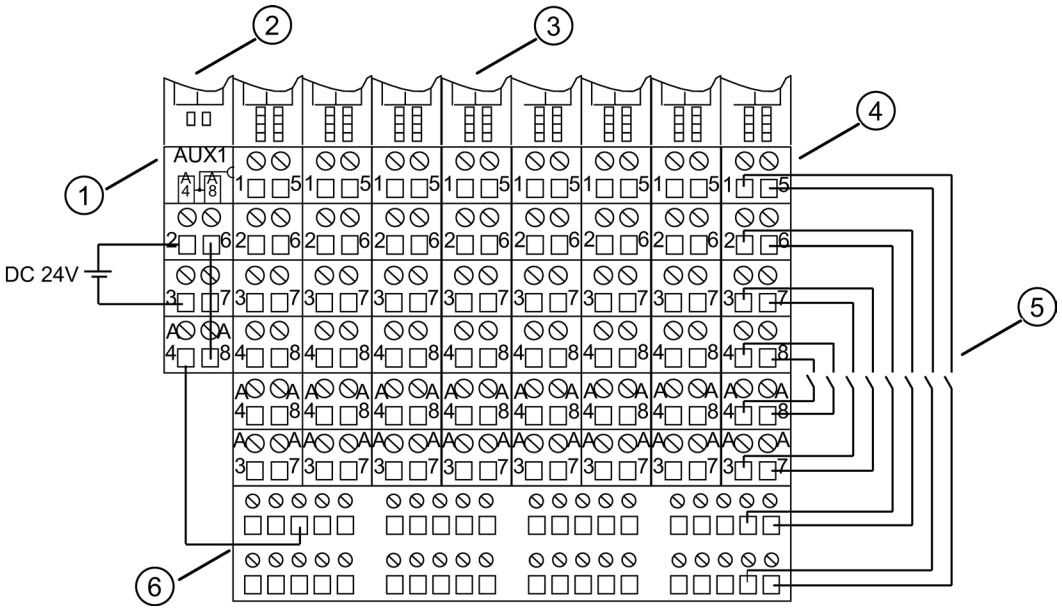

① Terminal module TM-P15S23-A0
② Power module PM-E 24 VDC
③ Electronic modules 8DI DC24V
④ Terminal modules TM-E15S26-A1
⑤ Sensor in 2-wire connection
⑥ Add-on terminal TE-U120S4x10

Block diagram

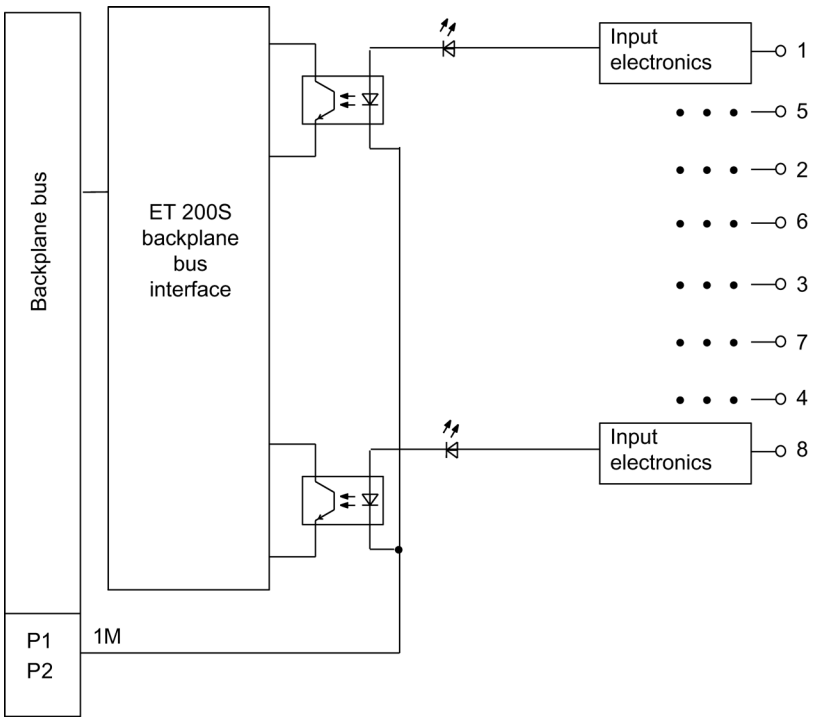

Figure 1-1 Block diagram of the 8DI DC24V

Technical Specifications 8DI DC24V (6ES7131-4BF00-0AA0)

Dimensions and weight	
Width (mm)	15
Weight	Approx. 35 g
Module-specific data	
Supports isochronous operation	Yes
Number of inputs	8
Length of cable	
• Unshielded	max. 600 m
• Shielded	Max. 1,000 m
Parameter length	3 bytes
Address space	1 byte
Voltages, currents, potentials	
Rated supply voltage (from the power module)	24 VDC
• Reverse polarity protection	Yes
Electrical isolation	
• Between the channels	No
• Between the channels and backplane bus	Yes
Permissible potential difference	
• Between the different circuits	75 VDC / 60 VAC
Insulation test voltage	500 VDC
Current consumption	
• From supply voltage	Dependent on the sensor
Power dissipation of the module	Typically 1.2 W
Status, interrupts, diagnostics	
Status display	Green LED per channel
Diagnostics function	No
Data for selecting a sensor	
Input voltage	
• Rated value	24 VDC
• For signal "1"	15 V to 30 V
• For signal "0"	-30 V to 5 V
Input current	
• At signal "1"	Typ. 5 mA (for 24 V)
Input delay	
• At "0" to "1"	Typ. 3 ms (2.0 to 4.5 ms)
• At "1" to "0"	Typ. 3 ms (2.0 to 4.5 ms)
Input characteristic curve	According to IEC 61131, Type 1
Connection of 2-wire BEROs	Supported
• Permitted bias current	Max. 1.5 mA

Diagnostics

2

2.1 Diagnostics using LED display

LED display

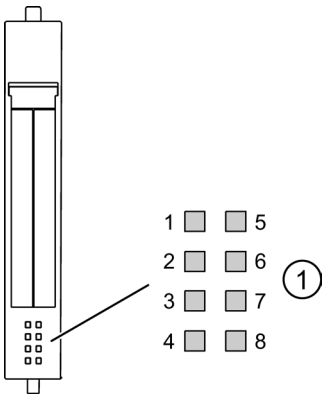

① Status display for input status (green)

Status and error displays

Event (LEDs)								Cause	Remedy
1	5	2	6	3	7	4	8		
On								Input on channel 0 activated.	—
	On							Input on channel 1 activated.	—
		On						Input on channel 2 activated.	—
			On					Input on channel 3 activated.	—
				On				Input on channel 4 activated.	—
					On			Input on channel 5 activated.	—
						On		Input on channel 6 activated.	—
							On	Input on channel 7 activated.	—