3.5.4 Arrangement of the modules for the function "Change During Operation" and / or "Redundancy"

Arrangement rules

The following rules apply to the location of the modules in an ET 200M:

- An ET 200M can only be installed on one mounting rack (rail), because coupling to other mounting racks via interface modules is not permissible.
- A maximum of 8 signal modules, function modules or communication processors may be inserted to the right alongside the IM 153-x.
- The IM 153-x and all the SM / FM / CP must be connected to active bus modules.

With the respective configuration, you can compatibly operate the combinations of interface modules IM 153-2 specified in the following table on active bus modules BM IM/IM.

Table 3- 3 Compatible versions of the IM 153-2 interface module

If the redundant IM 153-2 are configured as ...	... and the interface modules are connected to the active bus module 6ES7195-…,	then the following IM 153-2 can be operated compatibly:
IM 153-2AA02	7HD00-0XA0	IM 153-2AA02 IM 153-2BA00 IM 153-2BAx1
	7HD10-0XA0	IM 153-2BA00 IM 153-2BAx1
IM 153-2BA00	7HD10-0XA0	IM 153-2BA00 IM 153-2BAx1
IM 153-2BA01	7HD10-0XA0	IM 153-2BAx1
	7HD80-0XA0	IM 153-2BAx1
IM 153-2BA81	7HD80-0XA0	IM 153-2BA81
IM 153-2AB01	7HD00-0XA0	IM 153-2AB01 IM 153-2BB00
	7HD10-0XA0	IM 153-2BB00
IM 153-2BB00	7HD10-0XA0	IM 153-2BB00

Note

The active bus modules 6ES7195-7HD10-0XA0 and 6ES7195-7HD80-0XA0 are given two yellow markings for easier identification. These marks indicate that only IM 153-2Bx00 or IM 153-2Bxx1 can be connected to these bus modules.

- Use the rails for "module change during operation" (only these can take the active bus modules).
- Close unused slots with the backplane bus cover. Close the last bus module with the bus module cover. The bus module cover is included with the bus module BM PS/IM or BM IM/IM. The backplane bus cover has to be ordered.

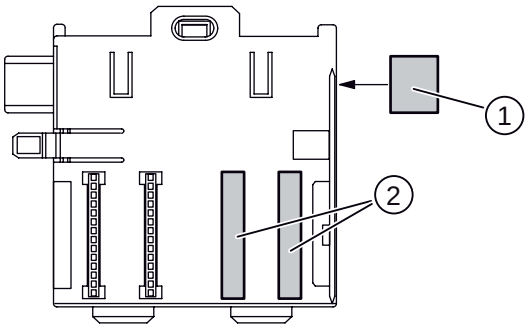

① Bus module cover

② Backplane bus cover

Figure 3-8 Example: Bus module 2 x 40 (…-7HB00-)

- To use the ET 200M in the intrinsically safe area, use the explosion-proof partition - preferably between the modules in the intrinsically safe area and the modules in the non-intrinsically safe area.

Greater number of modules with the IM 153-2BAx2 and IM 153-4AA0x

A maximum of 12 modules can be operated with the IM 153-2BAx2 and IM 153-4AA0x interface module, compared to 8 modules previously.

Restrictions

Use of the high-accuracy time stamp (1 ms accuracy) is only possible with 8 modules. In this case, a maximum of 8 input modules can be inserted after the IM 153-2BAx2 interface module in the ET 200M.

4.2.2 Installing the DIN rail

Uniform Installation

All the information in this section applies to both the DIN rail and the rail for active bus modules.

Mounting Rail for Active Bus Module

To configure an ET 200M with the function "Module change during operation", "Redundancy", use the associated rails with the order number 6ES7195-1Gxx0-0XA0. Only these rails can take the active bus modules.

For the dimensions of the mounting rails for active bus module, refer to the chapter "Installing Active Bus Modules and Modules (Configuration with Active Bus Modules) (Page 66)".

Do you want to install a 2-meter rail?

If not, you can skip this section and read on from "Dimensioned Drawing for Fixing Holes".

If you do you need to prepare the 2-meter rail for installation. Proceed as follows:

1. Shorten the 2-meter rail to the required length.
2. Mark out:
   - four holes for fixing screws (dimension: refer to the following figure and following table)
   - One hole to take the fixing screw for the protective conductor.
3. Is the rail longer than 830 mm?
   - If not: No further steps have to be taken.
   - If so: Then, in order to stabilize the rail you must provide additional holes for extra fixing screws. Score out these extra holes across the groove in the central area of the rail (refer to following figure). These additional holes should be at approx. 500 mm intervals.
4. Drill the marked holes with a diameter of 6.5 $^{+0.2}$ mm for M6 screws.
5. Screw in an M6 screw to fix the grounding wire.

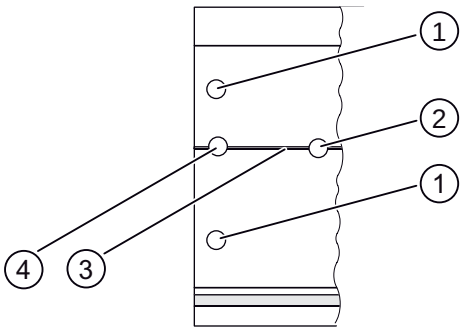

① Hole for fixing screw
② Drilled hole for extra fixing screw
③ Groove for drilling extra fixing holes
④ Hole for connecting a protective conductor

Figure 4-1 Fixing holes of the 2-meter rail

Dimensioned Drawing for Fixing Holes

The fixing-hole dimensions for the rail are shown in the following table.

Table 4- 1 Fixing holes for rails

DIN Rail Mounting rail for the "Insertion and Removal" function				
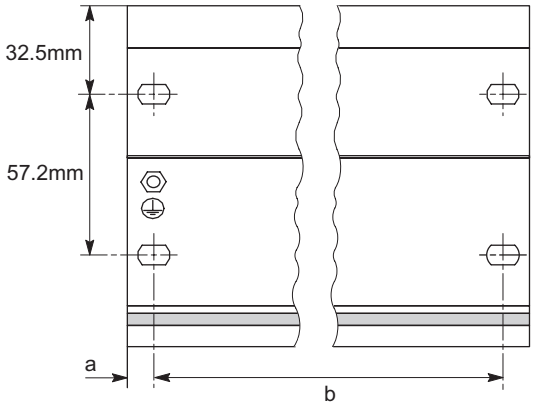				
Length of rail	**DIN Rail**	**Mounting rail for the "Insertion and Removal" function**	**Dimension a**	**Dimension b**
160 mm	X	—	10 mm	140 mm
482.6 mm	X	X	8.3 mm	466 mm
530 mm	X	X	15 mm	500 mm
620 mm	—	X	15 mm	590 mm
830 mm	X	—	15 mm	800 mm

2-meter rail 2-meter rail for the "Insertion and Removal" function
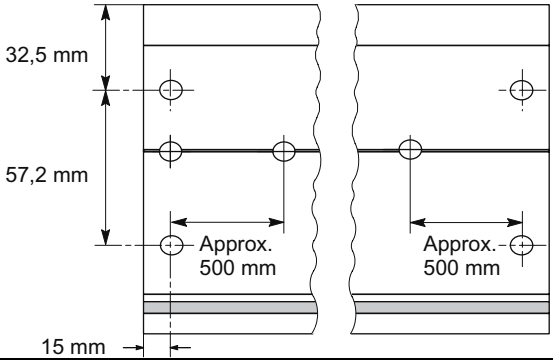

Fixing Screws

You have a choice of the following screw types for fixing the rail.

For …	you can use ...	Description
Outer fixing screws	Fillister head screw M6 in accordance with ISO 1207 / ISO 1580 (DIN 84 / DIN 85)	Choose a suitable screw length for your configuration. You also require washers 6.4 in accordance with ISO 7092 (DIN 433).
	Hexagon head screw M6 in accordance with ISO 4017 (DIN 4017)	
additional fixing screw (only 2-meter rail)	Fillister head screw M6 in accordance with ISO 1207 / ISO 1580 (DIN 84 / DIN 85)	

Installing the mounting rail

To install the rail, proceed as follows:

1. Choose a position for the rail that leaves enough room to install it properly and enough space to cope with the temperature rise of the modules. Observe the minimum clearance distances of 40 mm above and below the rail.
2. Connect the rail to the base (screw size: M6).

   Is this base a grounded metallic plate or a grounded device supporting plate?

   If not: No particular steps are required.

   If so: Ensure there is a low-impedance connection between the rail and the base. In the case of painted or anodized metals, for instance, use a suitable contacting agent or contact washers.
3. Connect the rail to the protective conductor. An M6 screw is provided for this purpose on the rail.

   Minimum cross-section of the cable to the grounding wire: 10 mm^2.

Note

Ensure that your connection to the protective conductor is low-impedance (see the following figure). If the ET 200M is mounted on a hinged rail, for example, you must use a flexible cable to establish the connection to the protective conductor.

Connection of protective conductor

The following figure shows you how to connect the protective conductor to the rail.

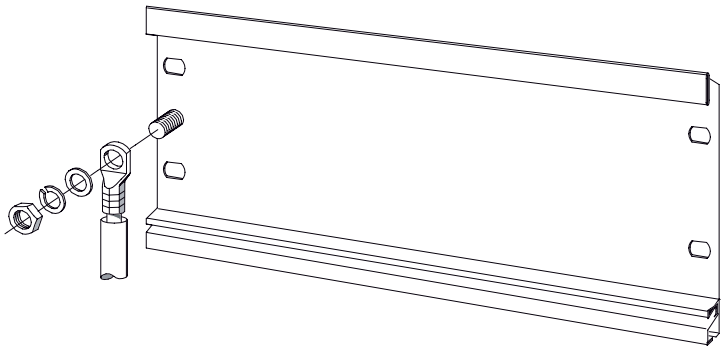

Figure 4-2 Connecting the protective conductor to the rail

See also

Clearance Measurements (Page 41)

4.2.3 Installing modules on the mounting rail (standard installation)

Accessories

The accessories you need for installation are included with the modules. The appendix "Order Numbers for ET 200M (Page 247)" contains a list of accessories and spare parts with the corresponding order numbers.

Table 4- 2 Module accessories

Module	Included accessories	Description
IM 153-x	1 x slot number label	For assigning slot numbers
Signal module (SM)	Bus connectors	For establishing the electrical connections between the modules
	Labeling strip	For labeling the input and output points on the module

Order Numbers for the ET 200M

B

ET 200M components

Table B- 1 ET 200M components

Accessories and spare parts for the ET 200M	Order number
Active bus modules	
• Bus module BM IM/IM (…7HD) for redundancy with 2 x IM 153-2AA02 / -2AB01	6ES7195-7HD00-0XA0
• Bus module BM IM/IM (…7HD) for redundancy with 2 x IM 153-2Bx00 / -2Bxx1	6ES7195-7HD10-0XA0
• Bus module BM IM/IM (…7HD) outdoor for redundancy with 2 x IM 153-2Bx00 / -2Bxx1	6ES7195-7HD80-0XA0
• Bus module BM PS/IM (…7HA) for power supply and IM 153	6ES7195-7HA00-0XA0
• Bus module 2 x 40 (…7HB) for one or two 40 mm wide S7-300 modules	6ES7195-7HB00-0XA0
• Bus module 1 x 80 (…7HC) for an 80 mm wide S7-300 module	6ES7195-7HC00-0XA0
Covers (including 4 backplane bus covers and 1 bus module cover)	6ES7195-1JA00-0XA0
Explosion-proof partition	6ES7195-1KA00-0XA0
Mounting rail	
• 160 mm	6ES7390-1AB60-0AA0
• 482.6 mm	6ES7390-1AE80-0AA0
• 530 mm	6ES7390-1AF30-0AA0
• 830 mm	6ES7390-1AJ30-0AA0
• 2000 mm	6ES7390-1BC00-0AA0
Rail for the "module change during operation" function	
• 482.6 mm	6ES7195-1GA00-0XA0
• 530 mm	6ES7195-1GF30-0XA0
• 620 mm	6ES7195-1GG30-0XA0
• 2000 mm	6ES7195-1GC00-0XA0
Bus connector with FastConnect	
• with vertical cable departure, up to 12 MBaud, without PG socket	6ES7972-0BA52-0XA0
• with vertical cable departure, up to 12 MBaud, with PG socket	6ES7972-0BB52-0XA0
• with diagonal cable departure, up to 12 MBaud, without PG socket	6ES7972-0BA60-0XA0
• with diagonal cable departure, up to 12 MBaud, with PG socket	6ES7972-0BB60-0XA0