SIEMENS

SIMATIC S5

Analog Input Modules

6ES5460-4UA1.
6ES5463-4U.1.
6ES5465-4UA1.

Analog Output Modules

6ES5470-4U.1.

Instructions

C79000-B8576-C300-06

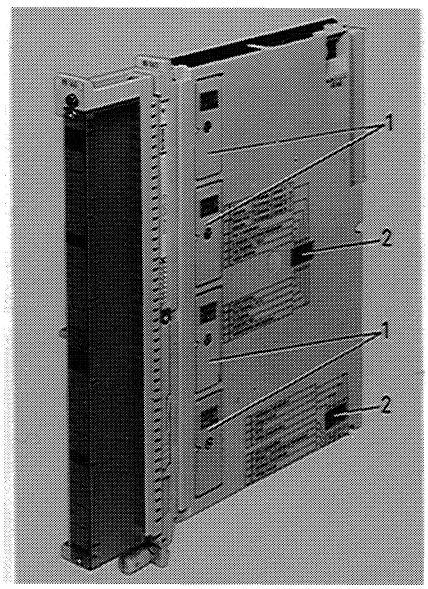

1 Range submodules
2 Mode switch

Fig. 1 Analog input module 6ES5465-4UA11

Type of module	Number of inputs	Electrical isolation/groups	Order no. of the module	Range submodules (4 channels)	Order No. of the range submodule	Technical data on page
Analog input and submodules	8 16/8	Yes/8 inputs referred to 0 V and between each other No/none	6ES5460-4UA11 -4UA12 6ES5465-4UA11 -4UA12	50/500 mV/Pt 100 12.5/50/500mV/Pt100 50/500 mV/Pt 100 ±1 V ±10 V ±20 mA 4 to 20 mA ±5 V 4 to 20 mA/4-wire transducer	6ES5498-1AA11 6ES5498-1AA11 6ES5498-1AA11 6ES5498-1AA21 6ES5498-1AA31 6ES5498-1AA41 6ES5498-1AA51 6ES5498-1AA61 6ES5498-1AA71	5-1 5-6 5-14 5-19
Analog input	4	Yes/4 inputs referred to 0 V and between each other	6ES5463-4UA11 -4UA12 -4UB11 -4UB12	Ranges 1 V, 10 V, 20 mA, 4 to 20 mA		5-11
	Outputs			Output range		
Analog output	8 8 8	Yes/8 outputs referred to 0 V Yes/8 outputs referred to 0 V Yes/8 outputs referred to 0 V	6ES5470-4UA11 -4UA12 6ES5470-4UB11 -4UB12 6ES5470-4UC11 -4UC12	±10 V/0 to 20 mA ±10 V 1 to 5 V/4 to 20 mA		5-25 5-25 5-25

1 Description

1.1 Application

Analog input and output modules are used as process interface modules for the input and output of a wide range of analog process signals for programmable controllers which use the digital principle, such as the S5-130 W, -135 U, -150 K/S/U, -155 U and -210 A/B.

The analog input and output modules allow the implementation of control systems which require the processing of analog measured variables, or the continuous control of actuators.

1.2 Design

The modules are designed as plug-in PCBs for the ES 902 modular packaging system with a backplane and a plug connector which mates with a front connector. By means of screw terminals or crimp connections, the process signal lines can be directly connected to the front connector which is available separately.

Each module is equipped with a addressing switch (6 dip switches) for setting the module address. The analog input modules are additionally provided with two switches (8 dip switches) for selecting the mode and locations for range submodules.

The module is protected on both sides by covers. These covers are secured by means of thermally moulded plastic rivets.

1.3 Principle of Operation

Analog input and output modules whose signals are not fed via the process image are addressed over the address range 128 to 255 by the STEP-5 program. In principle, addressing over the range 0 to 127 is also possible with appropriate programming (refer to the load and transfer operations of the operations list).

The CPU emits an address byte (address bits ADB 0 to ADB 7) on the address bus, which contains the starting address of the module and the subaddress for selecting the input and output channels. This allows an arrangement in basic and extension units which is independent of the module locations.

The starting address of the module can be set on an addressing switch by the user. The subaddress (channel address) is decoded automatically on the module.

One data word (two data bytes) is required for processing an input or output. A module with 16 inputs thus occupies 32 byte addresses, and a module with 8 inputs or outputs occupies 16 byte addresses.

3.4 Connecting the Signal Lines

The modules are fitted with 42-way plug connectors with blades of 2.4 mm x 0.8 mm.

For the connection of signal lines, front connectors are available with crimp terminals for mounting widths of 20 mm and 40 mm and with screw terminals for a mounting width of 40 mm. Stranded conductors should be used to facilitate handling of the front connector. With the screw terminals, sleeves are not required because the screw terminals are provided with wire protectors.

Width of the screwdriver blade: 3.5 mm.

Type of connection	Connector type 6ES5 497-	Max. no. of terminals	Wire cross-section: Signal or supply line	Wire cross-section: Additional jumper in connector [1]	Connector for rated voltage	Mounting width of module	
Crimp contact	-4UA12 [2]	42	0.5 mm²	0.5 mm²	5...60 V⎓	20 mm	Operation with fan
	-4UA22 [2]	42	0.5 mm²	0.5 mm²	5...60 V⎓	40 mm	Operation without fan
Screw contact	-4UB12	42	0.5...2.5 mm²	0.5...1.0 mm²	5...60 V⎓	40 mm	
	-4UB31	42	0.5...1.5 mm²	0.5...1.0 mm²	5...60 V⎓	20 mm	

3.5 Connecting Sensors to Analog Input Modules

3.5.1 Connecting Current-type or Voltage-type Sensors

In the case of floating sensors it may occur that the measuring circuit assumes a potential against ground which exceeds the permissible potential difference U_{CM} (see maximum values of the individual modules). In order to prevent this, the negative potential of the sensor must be connected to the reference potential of the module (0-V rail).

[1]) To provide multiple supply and earth potential connections and for connection of the enable input.

[2]) For these connector types crimp contacts must be ordered separately.

3.6 Connecting Loads to Analog Output Modules 470

The voltage at the load is measured at high impedance via the sensor leads (S+/S-) of voltage output QV so that the load voltages are not falsified by voltage drops on the load lines. Leads S+(x) and S-(x) should therefore be directly connected to the load (4-wire circuit). The voltage drops on the lines from QV(x) to and from the load after M_{ANA} must not exceed 3 V.

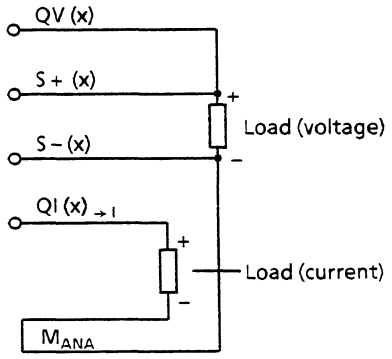

QV(x)	Analog output, voltage on channels 0 to 7
QI(x)	Analog output, current on channels 0 to 7
S+(x)	Sensor lead (+) for channels 0 to 7
S-(x)	Sensor lead (-) for channels 0 to 7
M_{ANA}	Ground terminal of the analog section

3.6.1 Connecting Loads to Current and Voltage Outputs

If the current and voltage outputs are used with analog output modules 470-4UA/4UC.., the loads should be connected as follows:

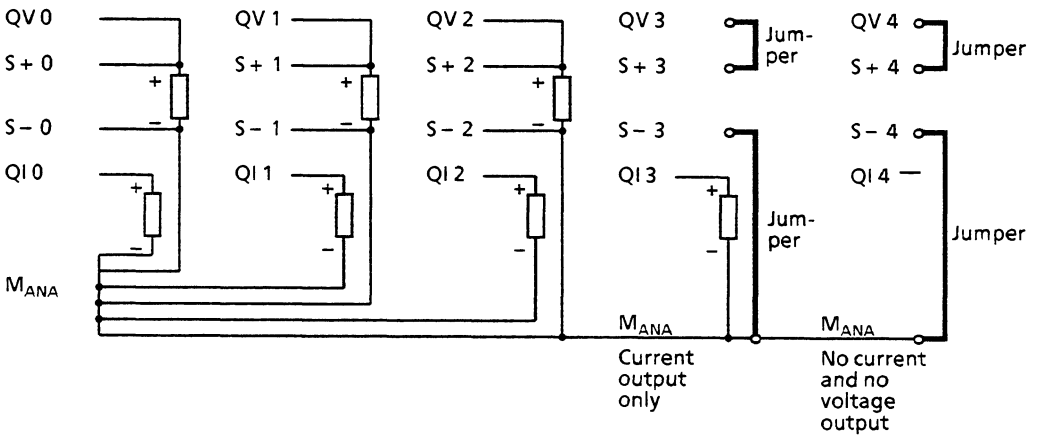

When a load is connected to a voltage output and a large voltage drop is expected along the cables, the sensor lines S+(x) and S-(x) must be connected directly to the load.

If the voltage outputs are not used, the sensor lines S+(x) must be connected in the front connector to the appropriate terminals of the voltage outputs (QV(x)) using wire jumpers. The sensor lines S-(x) must be connected to M_{ANA} using wire jumpers.

The same jumpers must also be inserted if only current outputs are used. Unused current outputs can be left open.

The maximum load for the current outputs, including the conductor resistance, must not exceed 300 ohms.

3.6.2 Connecting Loads to Voltage Outputs

The voltage outputs of the analog output module 470-4UB.. are wired as follows:

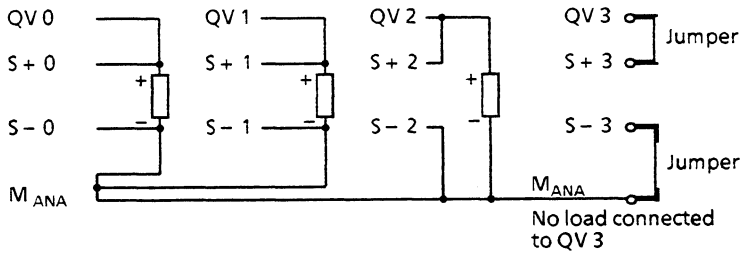

The sensor leads S+(x) and S-(x) must be wired to the load (four-wire circuit), if the voltage drop in the lines leading to the load cannot be ignored. The common connection for the voltage outputs is M_{ANA}. If the voltage drop in the lines leading to the load can be ignored, then, in the front connector, S+(x) can be connected with QV(x), and S-(x) with M_{ANA}.

If voltage outputs are not used, jumpers must be inserted in the front connector, e.g. QV(3) to S+(3) and S-(3) to M_{ANA} for unused voltage output 3 (see Chapter 3.6.1).

5.6 Analog Output Module 6ES5 470-4UA11/-4UA12, 470-4UB11/-4UB12 and 470-4UC11/-4UC12

5.6.1 Technical Data

Rated output range	
- 6ES5470-4UA11/-4UA12	0 to ±10 V and 0 to 20 mA parallel with ±1024 units
- 6ES5470-4UB11/-4UB12	±10 V with ±1024 units
- 6ES5470-4UC11/-4UC12	1 to 5 V and 4 to 20 mA parallel with 0 to 1024 units
Number of outputs	8 voltage and current outputs, open-circuit- and short-circuit-proof
Electrical isolation	Yes; 8 outputs with respect to M_{ext}
Measured-value representation	12 bits (two's complement)
Linearity in the range of ±1024 units	±2 LSB = ±0.2%
Operating error limits (0 to 60°C)	±0.6%
Permissible overdriving	Approx. 25% (±1024 to ±1272 units)
Short-circuit current with voltage output	Approx. 25 mA
No-load voltage with current output	Max. 18 V
Output current with voltage output	Max. 3 mA
Max. capacitive load incl. line capacity	< 100 nF
Delay time between data transfer and analog value output	≤ 1 ms
Load resistance	
- with voltage output	≥ 3.3 kohms
- with current output	≤ 300 ohms
Temperature coefficient for voltage and current outputs	1×10^{-4}/K
Permissible voltage drop on voltage output lines	±0.3 V at max. output voltage

Power supply	
- dig. section from system bus	5 V ±5%; approx. 250 mA
- analog section from load volt.	24 V; 200 to 400 mA
- module enable F+/F-	24 V; approx. 7 mA
Perm. potential difference U_{CM} between reference potentials of the load and the casing	Max. 60 V AC/75 V DC
Insulation voltage acc. to VDE 0160	Betw. outputs and casing: tested with 500 V AC
Impulse test according to IEC 255-4	Between outputs and L-: U_s = 1 kV; 1.2/50 µs

5.6.2 Pin Assignments of the Front Connector

6ES5470-4UB11
6ES5470-4UB12

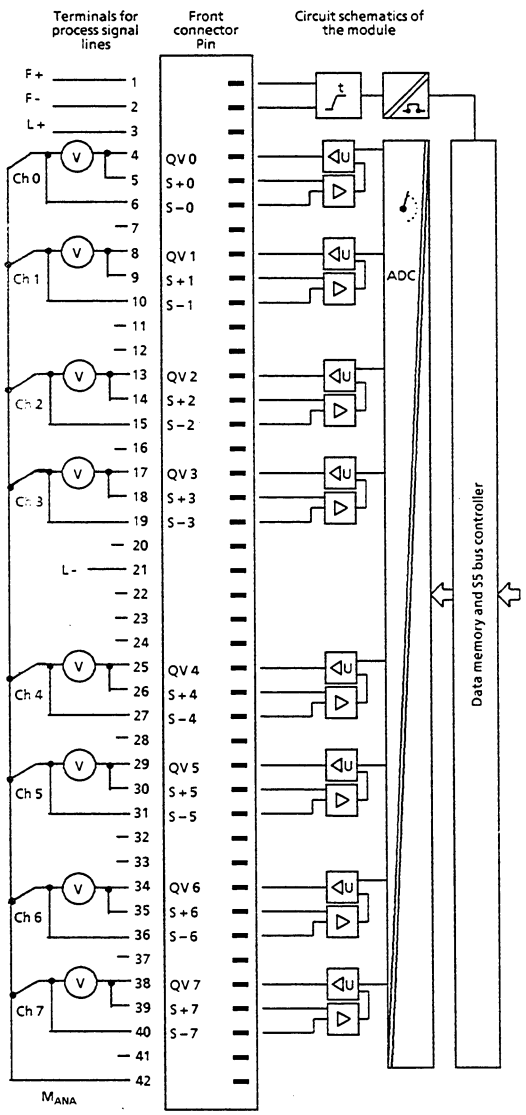

6ES5470-4UA11/-4UC11
6ES5470-4UA12/-4UC12

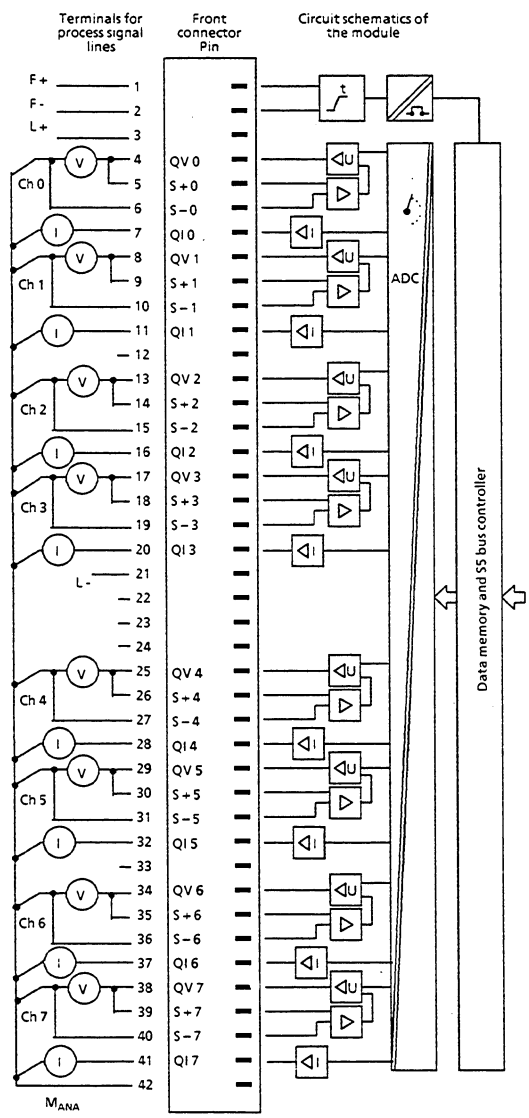

Addressing of process interface modules with 16 channels

Channel no.					0		1		2		3		4		5		6		7		8		9		10		11		12		13		14		15	
Subaddress (internal)				0	1	0	1	0	1	0	1	0	1	0	1	0	1	0	1	0	1	0	1	0	1	0	1	0	1	0	1	0	1	0	1
				1	2	0	0	1	1	0	0	1	1	0	0	1	1	0	0	1	1	0	0	1	1	0	0	1	1	0	0	1	1	0	0	1	1
Start address				2	4	0	0	0	0	1	1	1	1	0	0	0	0	1	1	1	1	0	0	0	0	1	1	1	1	0	0	0	0	1	1	1	1
				3	8	0	0	0	0	0	0	0	0	1	1	1	1	1	1	1	1	0	0	0	0	0	0	0	0	1	1	1	1	1	1	1	1
ADB	7	6	5	4	16	0	0	0	0	0	0	0	0	0	0	0	0	0	0	0	0	1	1	1	1	1	1	1	1	1	1	1	1	1	1	1
DW	128	64	32	⟶		HB	LB	HB	LB	HB	LB	HB	LB	HB	LB	HB	LB	HB	LB	HB	LB	HB	LB	HB	LB	HB	LB	HB	LB	HB	LB	HB	LB	HB	LB	HB	LB
Addressing switch	●					128	129	130	131	132	133	134	135	136	137	138	139	140	141	142	143	144	145	146	147	148	149	150	151	152	153	154	155	156	157	158	159
	●		●			160	161	162	163	164	165	166	167	168	169	170	171	172	173	174	175	176	177	178	179	180	181	182	183	184	185	186	187	188	189	190	191
	●	●				192	193	194	195	196	197	198	199	200	201	202	203	204	205	206	207	208	209	210	211	212	213	214	215	216	217	218	219	220	221	222	223
	●	●	●			224	225	226	227	228	229	230	231	232	233	234	235	236	237	238	239	240	241	242	243	244	245	246	247	248	249	250	251	252	253	254	255

DW Binary significance
HB High byte
LB Low byte
● Dip switch pressed

Addressing of process interface modules with 8 channels

Channel no.					0		1		2		3		4		5		6		7	
Subaddress (internal)				0	1	0	1	0	1	0	1	0	1	0	1	0	1	0	1	0	1
				1	2	0	0	1	1	0	0	1	1	0	0	1	1	0	0	1	1
Start address				2	4	0	0	0	0	1	1	1	1	0	0	0	0	1	1	1	1
				3	8	0	0	0	0	0	0	0	0	1	1	1	1	1	1	1	1
ADB	7	6	5	4	⌋																
DW	128	64	32	16	⌋	HB	LB	HB	LB	HB	LB	HB	LB	HB	LB	HB	LB	HB	LB	HB	LB
Addressing switch	●					128	129	130	131	132	133	134	135	136	137	138	139	140	141	142	143
	●			●		144	145	146	147	148	149	150	151	152	153	154	155	156	157	158	159
	●		●			160	161	162	163	164	165	166	167	168	169	170	171	172	173	174	175
	●		●	●		176	177	178	179	180	181	182	183	184	185	186	187	188	189	190	191
	●	●				192	193	194	195	196	197	198	199	200	201	202	203	204	205	206	207
	●	●		●		208	209	210	211	212	213	214	215	216	217	218	219	220	221	222	223
	●	●	●			224	225	226	227	228	229	230	231	232	233	234	235	236	237	238	239
	●	●	●	●		240	241	242	243	244	245	246	247	248	249	250	251	252	253	254	255