© Siemens AG 2016

ASM 456, SIMATIC RF160C

Overview

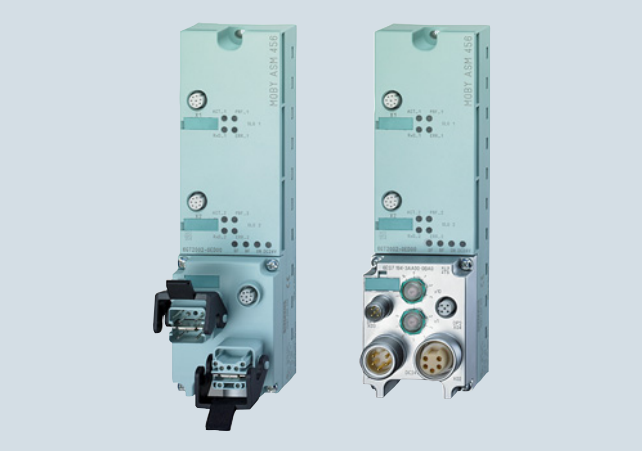

The low-cost communications modules ASM 456 and SIMATIC RF160C are stand-alone PROFIBUS DP slaves for the operation of MOBY D, SIMATIC RF200 / RF300 / RF600 RFID systems as well as the MV400 optical reader devices via PROFIBUS DP on:

- SIMATIC S7 (including FB/FC software)
- SINUMERIK
- PC, IPC, non-Siemens PLC
- SIMOTION (with integrated software library)

Thanks to their high degree of protection and ruggedness, they are particularly suitable for machine-level use. The modular structure with different PROFIBUS connection systems allows them to be used in all applications. The uniform plug-in connection system ensures rapid commissioning.

Benefits

get Designed for Industry

- Two parallel MOBY channels ensure real-time mode at dynamic read points.
- Modular design with different bus interfacing possibilities ensures universal implementation.
- Reader connection using an 8-pin M12 connector for quick mounting of all components.
- High-performance hardware ensures fast data exchange with the reader. Consequently, data is available for the application even faster.
- Simple firmware downloading via the TIA Portal in the case of function expansions and error rectification ensures high availability of the identification system.
- The parameterizable identification-system-specific PROFIBUS diagnostics facilitate start-up and troubleshooting.
- A wide selection of pre-assembled PROFIBUS connecting cables can be ordered for the communication modules. This saves time and money during installation and assures better quality.

Application

The ASM 456 and SIMATIC RF160C communication modules have been specifically designed for a wide range of applications in industrial automation and logistics. Thanks to the high IP67 degree of protection, the ASM 456 and RF160C can be installed in the process without a control cabinet.

Main application areas for ASM 456 and RF160C:

- Mechanical engineering, automation systems, conveyor systems
- Ancillary assembly lines in the automobile industry/suppliers
- Small assembly lines
- Production, packaging, textile, plastics and printing machines SIMOTION

Design

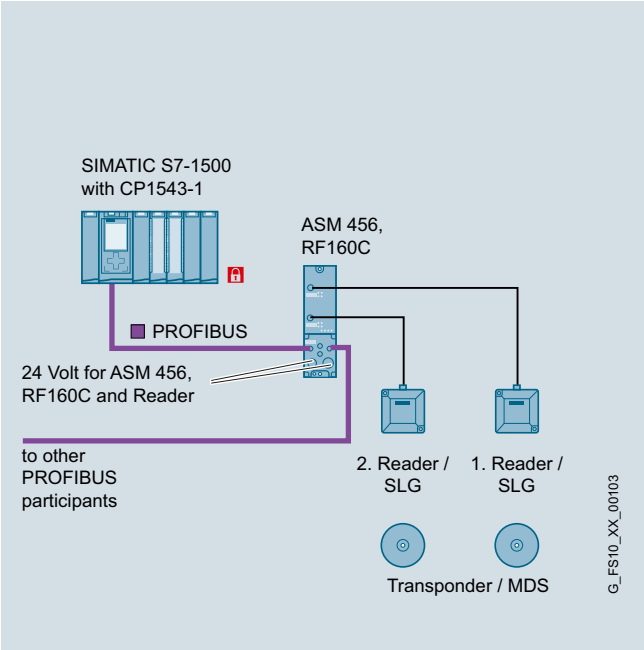

Configuration of ASM 456 and SIMATIC RF160C

5

© Siemens AG 2016

Function

The ASM 456 and the RF160C comprise a basic module and a connection block that must be ordered separately. When connecting PROFIBUS, the customer can choose between ECOFAST connections and M12, 7/8" connections.

A pre-assembled reader cable, available in lengths from 2 m to 50 m, is used to connect one or two readers/SLGs to the communication module. The cable can also be assembled by the customer as required.

The PROFIBUS DP procedure according to EN 50170 Vol. 2 PROFIBUS for communication between the communication module and SIMATIC S7 (or any PROFIBUS master) and the MOBY-specific procedures for communication between ASM and reader are implemented on the communication modules.

The data in the transponder can be accessed as follows:

- Direct addressing via absolute addresses
- Conveniently via the MOBY file handler (RF300 only) using file names (for ASM 456 only)

On the PROFIBUS DP, the communication module occupies a node address on the bus that is set on the connection block. The communication module is integrated into the hardware configuration by means of a device master (GSD) file. Then the communication module can be configured by means of the software tool HW_Config of the SIMATIC Manager or another PROFIBUS tool.

Error messages and operating states (transponder in the field, transmission active, etc.) are indicated additionally by means of LEDs and simplify commissioning and service.

ASM 456 and RF160C have two reader interfaces which also provide the readers with power. In the communication module, the power supply of the readers has an electronic fuse. If the reader requires more than 400 mA current (e.g. RF290R), only one reader can be operated on the communication module to avoid exceeding the maximum permissible current.

ASM 456

The ASM directly accesses the data in the transponder or the data matrix code via absolute addresses (FB/FC 45, FB/FC 55) or more conveniently using the MOBY file handler (FC 56) and file names. The communication module is operated in non-cyclic mode over PROFIBUS DP V1. Consequently, a very large amount of data can be transferred to/from the communication module without overloading the PROFIBUS cycle. This has advantages when transferring large volumes of data. In addition, the communication module can process concatenated transponder commands very quickly in this mode.

Function blocks FB 101/116/132 or the Ident Library in the SIMATIC S7 are available for the "RFID standard profile" mode. The Ident Library is integrated in the TIA Portal an doffers functions that are very easy to parameterize. The communication module is also integrated in SIMOTION by means of the "RFID standard profile" mode.

SIMATIC RF160C

The data in the transponder is accessed via absolute addresses. The FC 44 function block is available for SIMATIC S7 for this purpose. The RF160C is operated in cyclic mode over PROFIBUS DP-V0. This ensures a deterministic response in data communication in every case. Where there are large volumes of data, together with large-scale bus configurations, the data throughput should be tested with a tool which is provided on the DVD "RFID Systems, Software and Documentation". The programming interface to RF160C is extremely easy to use and can be programmed efficiently in any controller. The RF160C is therefore particularly suitable for use with non-Siemens controllers and older PROFIBUS masters.

Technical specifications

Article number	**6GT2002-0ED00**	**6GT2002-0EF00**
Product type designation	ASM 456 communication module	RF160C communication module
Suitability for operation	PROFIBUS network according to DP-V1 together with RF200/300/600, MV400, MOBY D/E/I/U	PROFIBUS network according to DP-V0 together with RF200/300/600, MOBY D/U
Transmission rate		
Transfer rate with PROFIBUS	9.6 kbit/s ... 12 Mbit/s	9.6 kbit/s ... 12 Mbit/s
Transfer rate at the point-to-point connection serial maximum	115.2 kbit/s	115.2 kbit/s
Interfaces		
Design of the interface for point-to-point connection	RS422	RS422
Number of readers connectable	2	2
Type of electrical connection		
• of the PROFIBUS interface	(according to the connection block)	(according to the connection block)
• for supply voltage	(according to the connection block)	(according to the connection block)
Design of the interface to the reader for communication	M12, 8-pin	M12, 8-pin
Mechanical data		
Material	Thermoplastic (Valox 467, fiberglass reinforced)	Thermoplastic (Valox 467, fiberglass reinforced)
Color	IP Basic 714	IP Basic 714
Tightening torque of the screw for securing the equipment maximum	3 Nm	3 Nm

© Siemens AG 2016

ASM 456, SIMATIC RF160C

Article number	**6GT2002-0ED00**	**6GT2002-0EF00**
Product type designation	ASM 456 communication module	RF160C communication module
Supply voltage, current consumption, power loss		
Supply voltage		
• at DC Rated value	24 V	24 V
• at DC	20 ... 30 V	20 ... 30 V
Consumed current at DC at 24 V		
• without connected devices typical	0.08 A	0.08 A
• with connected devices maximum	0.85 A	0.85 A
Permitted ambient conditions		
Ambient temperature		
• during operation	0 ... 55 °C	0 ... 55 °C
• during storage	-40 ... +70 °C	-40 ... +70 °C
• during transport	-40 ... +70 °C	-40 ... +70 °C
Protection class IP	IP67	IP67
Shock resistance	According to IEC 61131-2	According to IEC 61131-2
Shock acceleration	300 m/s²	300 m/s²
Vibrational acceleration	100 m/s²	100 m/s²
Design, dimensions and weight		
Width	60 mm	60 mm
Height	30 mm	30 mm
Depth	210 mm	210 mm
Net weight	0.21 kg	0.21 kg
Mounting type	2 x M5 screws	2 x M5 screws
Cable length for RS422 interface maximum	1 000 m	1 000 m
Product properties, functions, components general		
Display version	4 LEDs per reader connection, 4 LEDs for device status	4 LEDs per reader connection, 4 LEDs for device status
Product function transponder file handler can be addressed	Yes	No
Protocol is supported		
• PROFIBUS DP-V0 protocol	No	Yes
• PROFIBUS DP-V1 protocol	Yes	No
Type of parameterization	GSD	GSD
Type of programming	FB 45, FB 55, FC 56, Ident profile (PIB), (FC 45/55 with limited functionality)	FC 44
Type of computer-mediated communication	acyclic communication	Cyclic communication
Standards, specifications, approvals		
Certificate of suitability	CE, FCC, cULus	CE, FCC, cULus
MTBF	122 y	122 y
Accessories		
Accessories	Connection block for ECOFAST system or M12, 7/8"	Connection block for ECOFAST system or M12, 7/8"