7.3.5 Electronics Block ET 200B-32DO (6ES7 132-0BL01-0XB0)

Characteristics

The ET 200B-32DO electronics block has the following characteristics:

- 32 outputs, floating in groups of 8
- Load voltage: 24 V DC
- Output voltage: 0.5 A
- Suitable for solenoid valves and DC contactors
- Possible terminal blocks: TB2/DC, TB2-4/DC, TB4/DC, TB4M/DC

Dimensional Drawing

See Figure 7-22 for the precise dimensions.

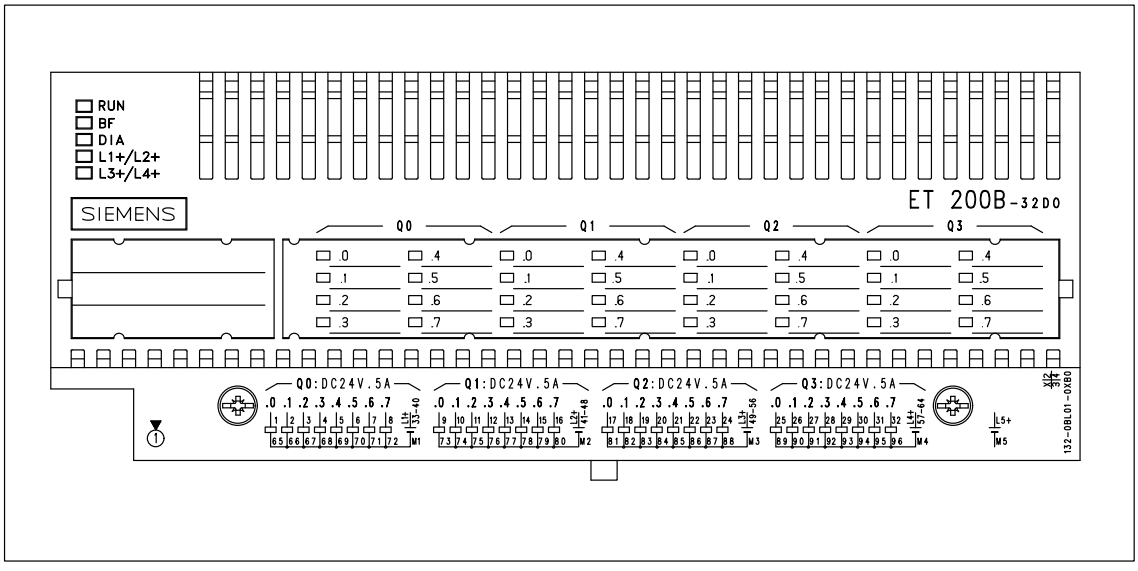

Figure 7-32 Front Elevation: ET 200B-32DO (6ES7 132-0BL01-0XB0)

Block Diagram Simplified diagram of potential for the ET 200B-32DO and TB2/DC or TB4/DC:

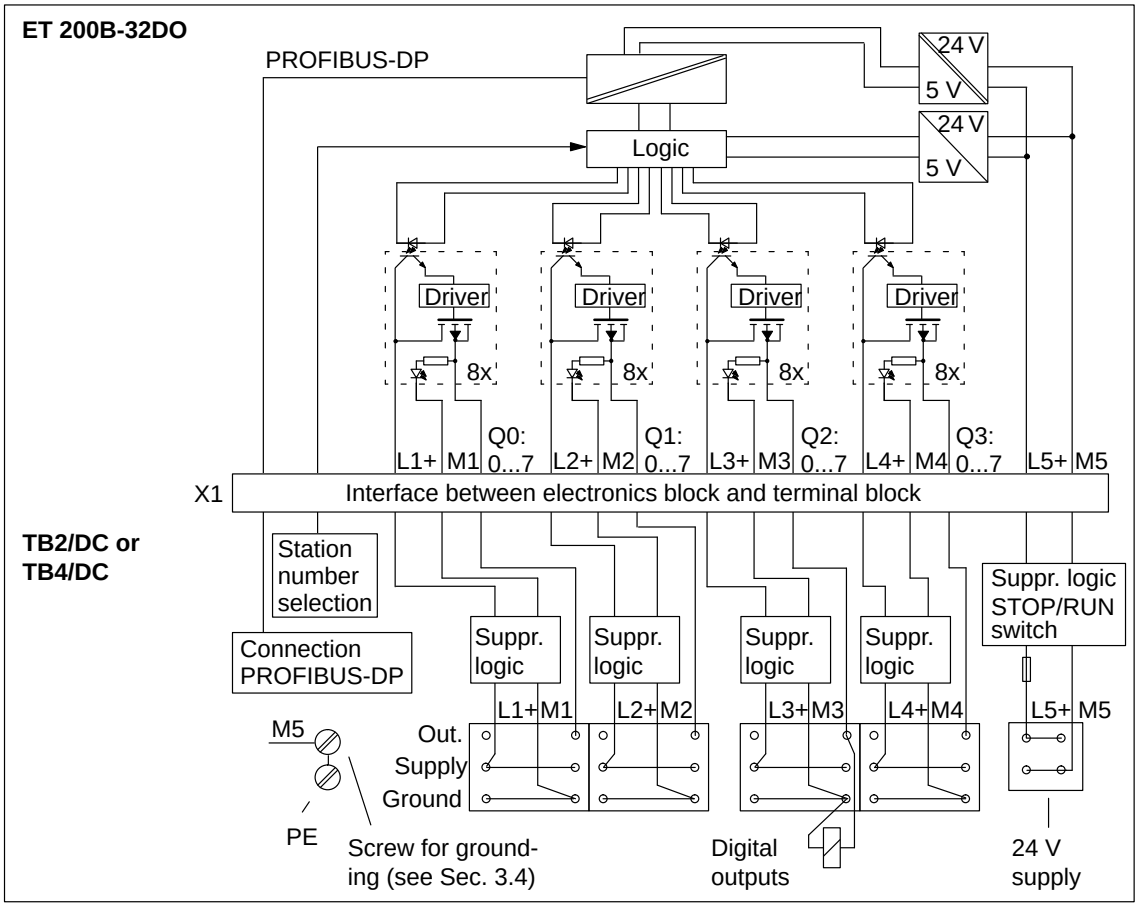

Figure 7-33 Block Diagram: ET 200B-32DO (6ES7 132-0BL01-0XB0) and TB2/DC or TB4/DC

Block Diagram Simplified diagram of the potential for the ET 200B-32DO and TB2-4/DC:

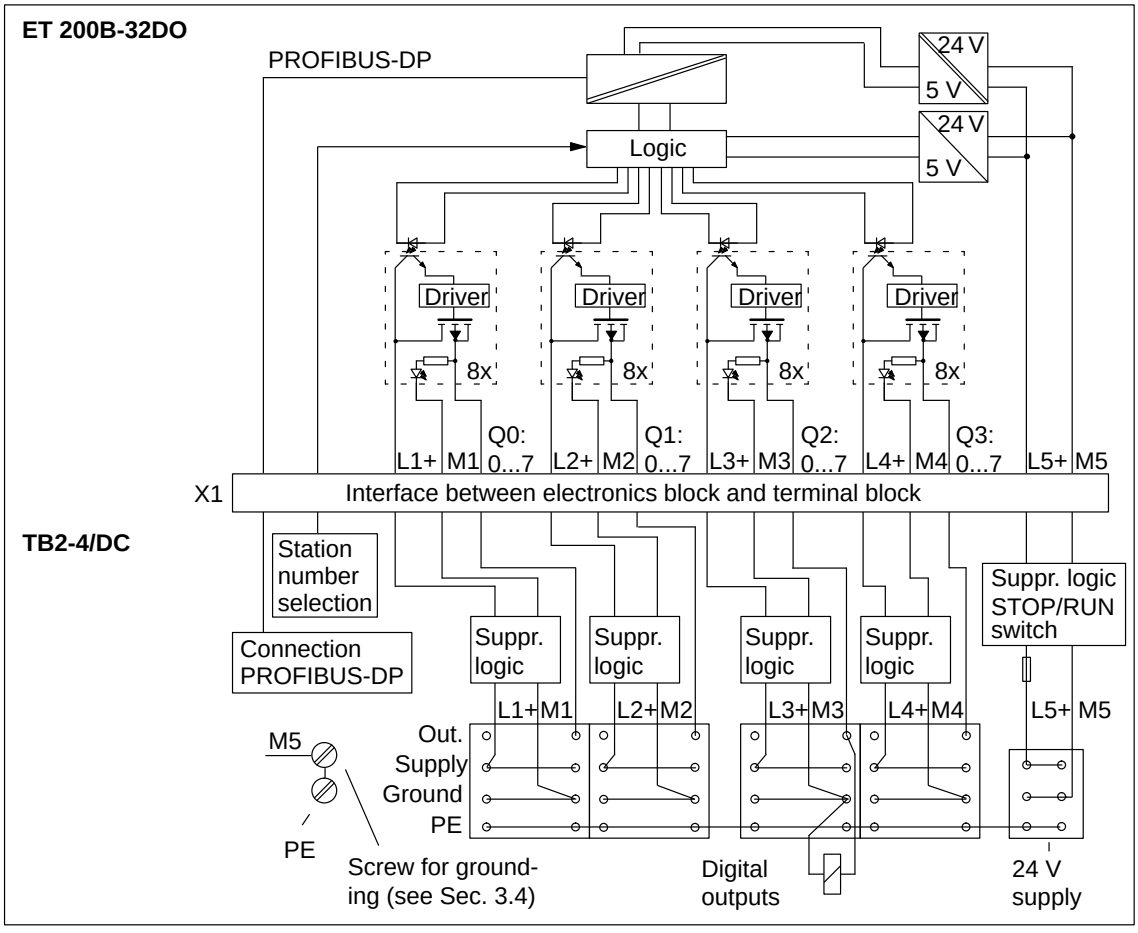

Figure 7-34 Block Diagram: ET 200B-32DO (6ES7 132-0BL01-0XB0) and TB2-4/DC

Pin Assignment

The table below shows the pin assignment of the terminal blocks for ET 200B-32DO. For the sake of clarity, the table also shows the terminal numbering of the terminal blocks, taking the TB2-4/DC by way of example.

Table 7-7 Pin Assignment of Terminal Blocks TB2/DC, TB2-4/DC, TB4/DC and TB4M/DC for ET 200B-32DO (6ES7 132-0BL01-0XB0)

Terminal numbering TB2-4/DC

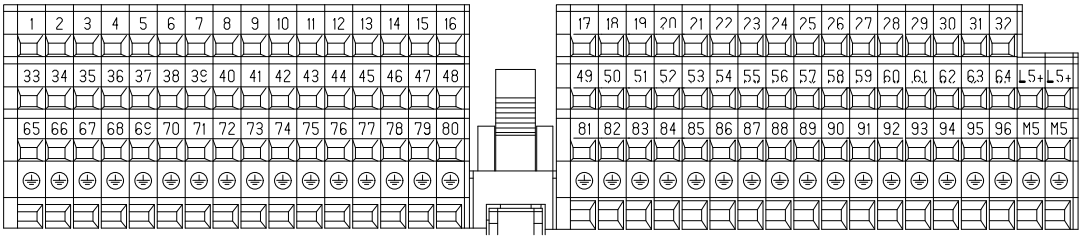

Terminal tier 1		Terminal tier 2		Terminal tier 3		Terminal tier 4[1]	
1	Q0: Output .0	33	Voltage supply **L1+** for channel group Q0: .0 to .7 (internally jumpered)	65	Ground **M1** for channel group Q0: .0 to .7 (internally jumpered)	⏚	PE (internally jumpered, but not connected to PE screw)
2	Q0: Output .1	34		66		⏚	
3	Q0: Output .2	35		67		⏚	
4	Q0: Output .3	36		68		⏚	
5	Q0: Output .4	37		69		⏚	
6	Q0: Output .5	38		70		⏚	
7	Q0: Output .6	39		71		⏚	
8	Q0: Output .7	40		72		⏚	
9	Q1: Output .0	41	Voltage supply **L2+** for channel group Q1: .4 to .7 (internally jumpered)	73	Ground **M2** for channel group Q01: .0 to .7 (internally jumpered)	⏚	
10	Q1: Output .1	42		74		⏚	
11	Q1: Output .2	43		75		⏚	
12	Q1: Output .3	44		76		⏚	
13	Q1: Output .4	45		77		⏚	
14	Q1: Output .5	46		78		⏚	
15	Q1: Output .6	47		79		⏚	
16	Q1: Output .7	48		80		⏚	
17	Q2: Output .0	49	Voltage supply **L3+** for channel group Q2: .0 to .7 (internally jumpered)	81	Ground **M3** for channel group Q2: .0 to .7 (internally jumpered)	⏚	
18	Q2: Output .1	50		82		⏚	
19	Q2: Output .2	51		83		⏚	
20	Q2: Output .3	52		84		⏚	
21	Q2: Output .4	53		85		⏚	
22	Q2: Output .5	54		86		⏚	
23	Q2: Output .6	55		87		⏚	
24	Q2: Output .7	56		88		⏚	

7

Table 7-7 Pin Assignment of Terminal Blocks TB2/DC, TB2-4/DC, TB4/DC and TB4M/DC for ET 200B-32DO (6ES7 132-0BL01-0XB0), continued

Terminal tier 1		Terminal tier 2		Terminal tier 3		Terminal tier 4[1]	
25	Q3: Output .0	57	Voltage supply **L4+** for channel group Q3: .0 to .7 (internally jumpered)	89	Ground **M4** for channel group Q3: .0 to .7 (internally jumpered)	⏚	PE (internally jumpered, but not connected to PE screw)
26	Q3: Output .1	58		90		⏚	
27	Q3: Output .2	59		91		⏚	
28	Q3: Output .3	60		92		⏚	
29	Q3: Output .4	61		93		⏚	
30	Q3: Output .5	62		94		⏚	
31	Q3: Output .6	63		95		⏚	
32	Q3: Output .7	64		96		⏚	
–		L5+	Voltage supply, internal logic	M5	Ground connection, internal logic	⏚	PE (internally jumpered, but not connected to PE screw)
–		L5+	Voltage supply, internal logic	M5	Ground connection, internal logic	⏚	

1 TB2-4/DC only; in the TB4M/DC tier 4 is available for additional ground connections (see Section 7.2.7)

Important Note on Wiring

The following notes are important as regards the wiring of the ET 200B-32DO:

- The terminals for PE on the 4-tier terminal block are not connected to the PE connection of terminal block TB2-4/DC.
- If all actuators are connected by two-wire cables to the TB2/DC, TB4/DC or TB2-4/DC, connect the ground of an actuator and the supply for the reference potential per group by means of a DIN 46231 cable cleat.
- L1+ ... L5+ and M1 ... M5 are **not** internally interconnected.
- The two L5+ terminals are internally interconnected.

Technical Data

The technical data of electronics block ET 200B-32DO is listed in the tables below.

Technical specifications	
Baud rates*	9.6/19.2/93.75/187.5/500/ 1500/3000/6000/ 12000 kbaud
Bus protocol	PROFIBUS-DP
SYNC capability	Yes
Galvanic isolation to SINEC L2-DP bus	Yes
Power losses	Max. 7.9 W
Weight (EB and TB)	Approx. 800 g (28 oz.)
Dimensions (EB and TB: W x H x D)	235 x 130 x 60 mm (9.17 x 5.07 x 2.34 in.)
Diagnostics functions	
Voltage monitoring	Green “RUN ”LED
Bus monitoring SINEC L2-DP	Red “BF” LED
Group diagnostics for short-circuit, load voltage failure	Red “DIA” LED
Load voltage monitoring	Green “L1+/L2+”, “L3+/L4+” LEDs
Status of outputs	Green LEDs
Supply voltage for outputs, load voltage supply and internal logic	
Supply voltage (L1+,L2+,L3+,L4+,L5+)	
• Rated value	24 V DC
• Permissible range	18.5 to 30.2 V
• Value for t < 0.5 s	35 V
I^2t (for inrush current)	$\leq$ 0.05 A^2s
Current consumption from L5+	
• Logic	Typ. 75 mA

Outputs	
Number of outputs	32
Galvanic isolation	Yes
• In groups of	8
Output voltage	
• For “0” signal	Max. 2 V (idle)
• For “1” signal	Min. (supply voltage – 3 V)
Output current	
• For “0” signal	Max. 1 mA
• For “1” signal	Max. 0.5 A
Delay of outputs	
• From “0” to “1”	Approx. 20 µs
• From “1” to “0”	Max. 0.5 ms
Switching frequency	
• Resistive load	Max. 1000 Hz
• Inductive load	Max. 0.5 Hz
• Lamp load	Max. 8 Hz
Short-circuit protection	Yes
Load current per group	
• Total current	Max. 2 A
Lamp load	Max. 5 W
Setting a digital input	Possible
Limitation of voltage induced on current interruption	Typ. (L1+ ... L4+) – 55 V
Cable length	Max. 100 m (328 ft.)

* In operation with the IM 308-B, the maximum baud rate is 1500 kbaud.

7