10.2 IC200ALG240 - Analog Input Module, 16 Bit Voltage/Current, 1500 V AC Isolation, 8 Channels

Analog input module IC200ALG240 provides eight analog inputs. Features include:

- Eight isolated 4-20mA current input channels
- Sixteen-bit converter resolution
- Open wire detection
- High-accuracy factory calibration

The following additional features are software-configurable:

- Per-channel selection of 4-20mA current or +/–10V voltage inputs
- Selectable input filter to reject normal mode AC pickup noise
- Selection of default/hold last state operation
- Per-channel selection of default values
- Per-channel selection of under-range and over-range diagnostics levels
- Per-channel selection of alarm levels
- Per-channel scaling

Figure 10-4

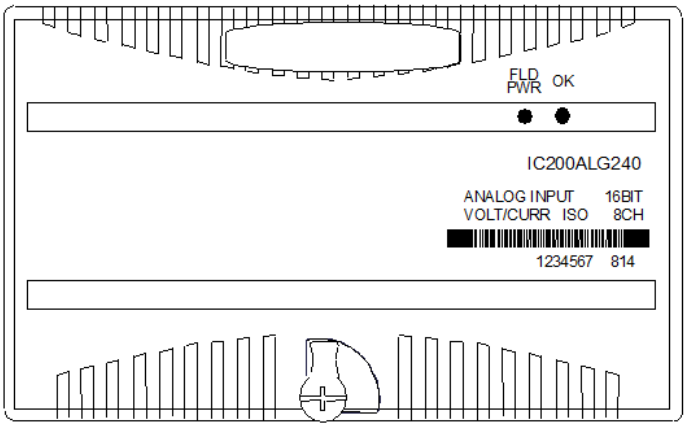

In current mode, a separate power supply may be required for isolated inputs. The module provides 8 words of analog input data to the system CPU or NIU.

10.2.1 LED Indicators

The green FLD PWR LED indicates the presence of both backplane power and field power for the analog field-side circuits. The absence of either backplane or field power turns off the FLD PWR LED.

The OK LED indicates module status:

- On green indicates normal operation
- Flashing green indicates boot mode or update
- Flashing amber indicates self-diagnostic error
- Off indicates no 3.3V backplane power

10.2.2 Module Specifications

Module Characteristics									
Channels	8 inputs								
Module ID	FFFF9802								
Isolation: User input to logic (optical) and frame ground Group to Group Channel to channel	250 V AC continuous; 1500 V AC for 1 minute Not applicable 250 V AC continuous; 1500 V AC for 1 minute								
LED indicators	FLD PWR LED indicates the presence of both logic power and user power. OK LED indicates module status.								
Backplane current consumption	5V output: 15mA maximum. 3.3V output: 120mA maximum								
External power supply: Range Current consumption	 +19.5 to +30 V DC including ripple 100mA maximum plus load currents								
Thermal derating	None								
Diagnostics	High/Low Limit, Over/Under range, Open Wire, Loss of Field Power Supply, Non-volatile memory fault								
Compatibility	PME programming software	CPU 001	CPU 002	CPU 005	CPU E05	DBI 001	EBI 001	GBI 001	PBI 001
HW, FW vers. FW release	All	BC 1.2	AA 1.5	AA 2.1	AA 2.1	AA 1.1	AA 1.0	AB 1.1	BB 1.1
Input Characteristics									
Input operating range	Current mode: +1 to 20mA Voltage mode: ±10 V DC								
Accuracy at 25 °C	± 0.1% maximum of full scale								
Temperature coefficient	Current mode: 45ppm/°C typical, 90 ppm/°C maximum Voltage mode: 30ppm/°C typical, 60 ppm/°C maximum								
Analog Resolution (1 LSB)	Current mode: 381 nA nominal Voltage mode: 381 µV nominal								
Channel data Update rate per module	Approximately 20 mS max. at 50 Hz filter frequency Approximately 16.7 mS max. at 60 Hz filter frequency								
Channel-to-channel crosstalk rejection	70dB minimum								
Input default	0 (default) or Hold Last State (configurable)								
Field input DC resistance	Current mode:150 Ω, Voltage mode:760 kΩ								
Field input filter	Type: Digital w/programmable notches at 50 or 60 Hz 3 dB Corner Frequency: 10Hz ± 25%								
Normal mode (power line frequency) rejection	35 dB minimum								
Input Characteristics									
Field Input Ranges	Current mode: Approximately 0 mA to +25 mA Voltage mode: Approximately –12.5 V to +12.5 V								
Maximum field input (without damage)	Current mode: ± 35 mA continuous Voltage mode: ± 17.5 V continuous								

10.2.3 Field Wiring

Number	Connection	Number	Connection
A1	Shield Termination Point	B1	Shield Termination Point
A2	VIN1-	B2	VIN5-
A3	IIN1-	B3	IIN5-
A4	VINIIN1+	B4	VINIIN5+
A5	Shield Termination Point	B5	Shield Termination Point
A6	VIN2-	B6	VIN6-
A7	IIN2-	B7	IIN6-
A8	VINIIN2+	B8	VINIIN6+
A9	Shield Termination Point	B9	Shield Termination Point
A10	VIN3-	B10	VIN7-
A11	IIN3-	B11	IIN7-
A12	VINIIN3+	B12	VINIIN7+
A13	Shield Termination Point	B13	Shield Termination Point
A14	VIN4-	B14	VIN8-
A15	IIN4-	B15	IIN8-
A16	VINIIN4+	B16	VINIIN8+
A17	DC-	B17	No connection
A18	DC+	B18	No connection

A 24-volt power supply must be connected to A17 and A18 to operate the module. The power wiring does not require shielding. Current inputs are applied with positive current flow into VININn+ and out of IINn-. Both negative terminals IINn- and VINn- of the channel should be connected together for best accuracy on current ranges. Voltage inputs are applied between VININn+ and VINn- with positive to VININn+.

Wiring Connections for Carriers with Two Rows of Terminals IC200CHS002, 005 IC200CHS012, 015	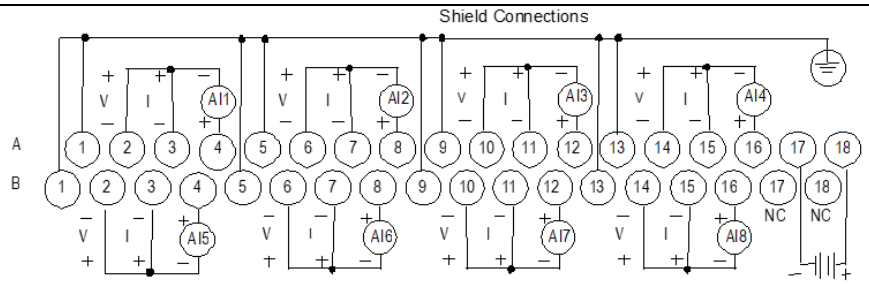
Wiring Connections for Carriers with Three Rows of Terminals IC200CHS001, 022, 025 IC200CHS011	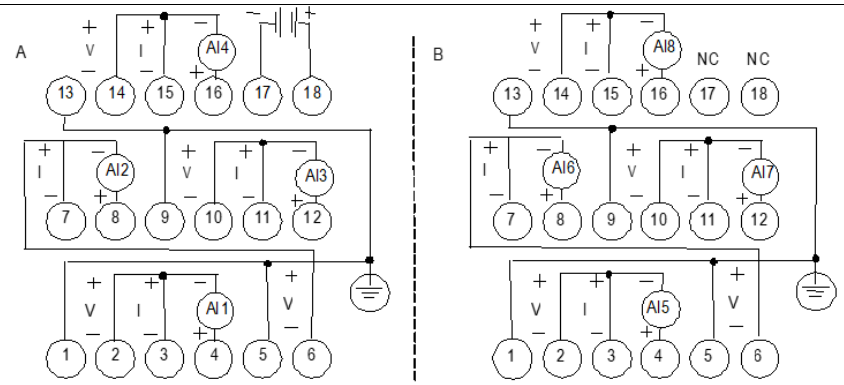

10.2.4 Cable Shield Connections

If possible, analog input channel connections should be grounded at the source device. If that is not possible, the cable shield must be grounded at the I/O module.

If the module is installed on a Terminal-style I/O Carrier (IC200CHS001, 002, or 005) or a Compact Terminal-style I/O Carrier (IC200CHS022 or 025), the cable shield can be connected directly to the carrier per the Field Wiring Table. An Auxiliary I/O Terminal Strip (IC200TBM001, 002, or 005) can also be added to the Terminal-style I/O Carriers to aid in grounding shields. If the module is installed on a Compact Terminal-style I/O Carrier (IC200CHS022, 025), shield connections can be made on an Auxiliary I/O Terminal that is mounted near the I/O carrier. Be sure to ground the Auxiliary I/O Terminal Strip as well to use it for this purpose.

If the module is installed on a Connector-style I/O Carrier (IC200CHS003), the cable shield can be connected directly to an Interposing Terminal (IC200CHS011, 012, 015). Be sure to ground the Interposing Terminal. It is recommended to use a shielded interposing cable as well between the Interposing Terminal and the Connector Base. A custom shielded cable can be made using the Connector kit (IC200ACC304). In addition, a custom shield braid can be wrapped around standard Interposing Cables (IC200CBL105,110,120, 230). If this approach is used be sure to ground the braid.

10.2.5 Operation

The default parameters of this module can be used in many applications. The module can be software-configured when it is installed in a VersaMax PLC system, or an I/O Station controlled by a Network Interface Unit that is version 2.0 or above. The module is configured at startup. If the module is auto- configured, it will operate with its default features. After configuration, the module begins receiving signals from the input devices connected to it.

10.2.6 Calibration

The module is calibrated at the factory. For most applications, no further calibration is required. It is possible to perform recalibration by changing a module's scaling, so its scaled data agrees with metered values.

10.2.7 Diagnostics

By default, the module is configured for fault reporting. The module reports faults as soon as they are detected. Once a fault has been reported, the same fault is not reported again until the fault has been cleared. Fault reporting can be disabled via configuration. If disabled, faults are not reported. The module can detect and report the following faults:

10.2.8 Over-Range

The module reports an Over-Range fault if an input value is greater than approximately +12.5 V or 25 mA.

10.2.9 Under-Range

The module reports an Under-Range fault if an input value is approximately 0mA on an current channel or –12.5 volts on a voltage channel.

10.2.10 Open Wire

The module reports an Open Wire fault on current inputs if the configuration of the low end of the range is greater than or equal to approximately 2.0 mA, but the input is not detecting current.

10.2.11 Loss of Field Power Supply

The module reports a Loss of Field Power fault if field power is not present (also indicated by the FLD PWR LED). Inputs default as specified by the configuration.

10.2.12 High Limit

The module reports a High Alarm fault if an input value is greater than or equal to the value specified by the "Alarm High" configuration parameter.

10.2.13 Low Limit

The module reports a Low Alarm fault if an input value is less than or equal to the value specified by the "Alarm Low" configuration parameter.

10.2.14 Non-volatile Memory Fault

The module reports this fault only during field recalibration if a non-volatile memory fault is detected.

10.2.15 Configurable Parameters

The default parameters of this module can be used in many applications. The module can be software-configured when it is installed in a VersaMax PLC system, or an I/O Station controlled by a Network Interface Unit that is version 2.0 or above.

Module Parameter	Description	Default	Choices
Analog Input Data Reference	Starting offset for the module's analog input data.		User selectable
Analog Input Data Length	Word length of the module's analog input data.	8	0–8
Line Frequency	Specifies the line filter frequency.	60 Hz	50 Hz, 60 Hz
Report Faults	Enables or disables Fault Reporting for the entire Module.	Enabled	Enabled, Disabled
%AI Default /Hold Last State	Specifies whether the module will go to the specified channel defaults (see below) or hold their last states if power or communications are lost.	Default	Default /Hold
Current /Voltage	Specifies whether the channel will be a voltage or current input. If the Channel type is Current, the range is 4 to 20mA. If Channel type is Voltage, the range is –10 to +10V.	I (Current)	I (Current), V (Voltage)
Channel Active	Specifies if the channel should input data received from the CPU or NIU. If a channel is "inactive" space is still allocated for it.	Active	Inactive (off), Active (on)
Span Low	Actual current (in microAmps) or voltage (in milliVolts) to be scaled from low engineering unit value.	4,000 µA	0 to 25,000 µA –10,000 to +10,000mV
Span High	Actual current in microAmps or voltage in millivolts to be scaled from the high engineering unit value.	20,000 µA	0 to 25,000 µA –10,000 to +10,000mV

Module Parameter	Description	Default	Choices
Engineering Low	The engineering unit value that is considered equivalent to the low span (actual) value.	4000	0 to 25,000 µA –10,000 to +10,000mV
Engineering High	The engineering unit value that is considered equivalent to the high span (actual) value.	20000	0 to 25,000 µA –10,000 to +10,000mV
Alarm Low	The low alarm limit for the channel, in engineering units.	4000	-32768 to +32767
Alarm High	The high alarm limit for the channel, in engineering units.	20000	-32768 to +32767
Default	The value to be input when the module is in a default condition.	0	-32768 to +32767

10.2.16 Configuring Scaling

The module converts electrical signals (either current or voltage, as configured) into digital output values for the CPU or NIU. By default, the module converts this data from 1 millivolt or 1 microamp “internal units” for convenience in scaling and comparing to actual meter measurements.

The module’s default scaling can be changed to tailor the data for a specific application. Typically, engineering units represent millivolts or microamps. But they may also represent physical units such as degrees or centimeters per second. When reconfiguring scaling, it is important to be sure that the chosen Engineering Units values would not result in Overrange or Under range output levels.

The scaling for each channel can be configured independently. Scaling is configured by selecting corresponding low and high engineering unit values and low and high internal values (counts) for two points.

During operation, the module will use the straight line defined by these two pairs of configured scaling values to convert internal values to current or voltage signal levels that represent appropriate engineering units.