Basic Line Modules with diodes

In the case of SINAMICS S120 diode-based Basic Line Modules in frame size GD, which are available as air-cooled S120 units in Chassis and Cabinet Modules formats, the DC link is precharged by a precharging circuit with resistors, a process which incurs heat losses. To precharge the DC link, the rectifier is connected at the line side to the line supply via a precharging contactor and precharging resistors. Once the DC link is precharged, the bypass contactor (circuit breaker) is closed and the precharging contactor opened again.

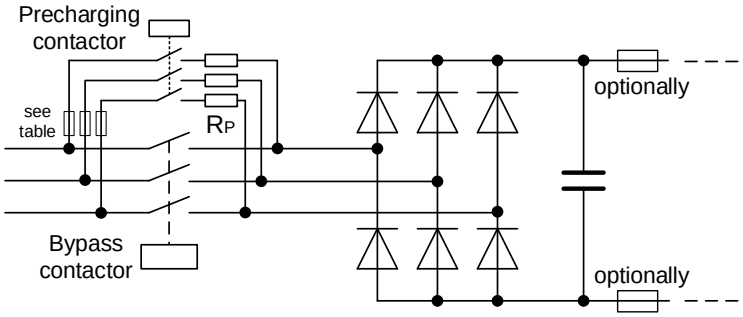

SINAMICS S120 diode-based Basic Line Modules: Precharging by means of precharging contactor and precharging resistors

IMPORTANT:

It is absolutely essential that the precharging contactor and the bypass contactor are controlled by the internal sequence control of the S120 Basic Line Module (precharging contactor via connector -X9:5,6 and bypass contactor (circuit breaker) via connector -X9:3,4). It is essential that the circuit breaker is opened by an instantaneous release. For this reason, only circuit breakers equipped with instantaneous undervoltage release may be used.

For S120 Basic Line Modules in Chassis format, the precharging circuit can be implemented either with one precharging resistor per line phase (as illustrated in the diagram above), or with two precharging resistors connected in parallel per line phase in order to increase the permissible DC link capacitance of the drive configuration (see section "Checking the maximum DC link capacitance").

The article numbers, the key technical data and the dimensions of the precharging resistors are stated in the table below. As described above, a total of 3 or 6 resistors must be installed depending on the magnitude of DC link capacitance required.

S120 BLM output at 400 V or 690 V		Input current at 400 V or 690 V	Precharging resistor		
Frame size	Output		Article number	Resistance value	Pulse load
380 V – 480 V 3AC					
GD	900 kW	1630 A	6SL3000-0KE12-2AA0	2.2 Ω ± 10 %	18000 Ws
500 V – 690 V 3AC					
GD	1500 kW	1580 A	6SL3000-0KH14-0AA0	4.0 Ω ± 10 %	18000 Ws

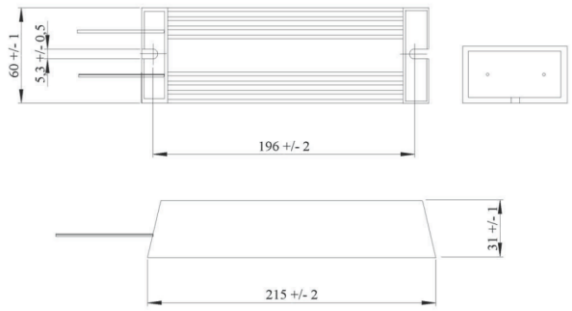

Dimensions of resistor 6SL3000-0KE12-2AA0 / 2.2 Ω

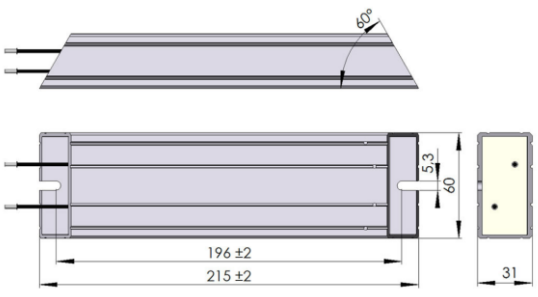

Dimensions of resistor 6SL3000-0KH14-0AA0 / 4.0 Ω

S120 Basic Line Modules with diodes: Article numbers, technical data and dimensions of precharging resistors