© Siemens AG 2017

Integration

The Active Line Module receives its control information via DRIVE-CLiQ from:

- CU320-2 Control Unit
- SINUMERIK 840D sl with
  - NCU 710.3B PN
  - NCU 720.3B PN
  - NCU 730.3B PN
  - Numeric Control Extensions NX10.3/NX15.3
- SIMOTION D

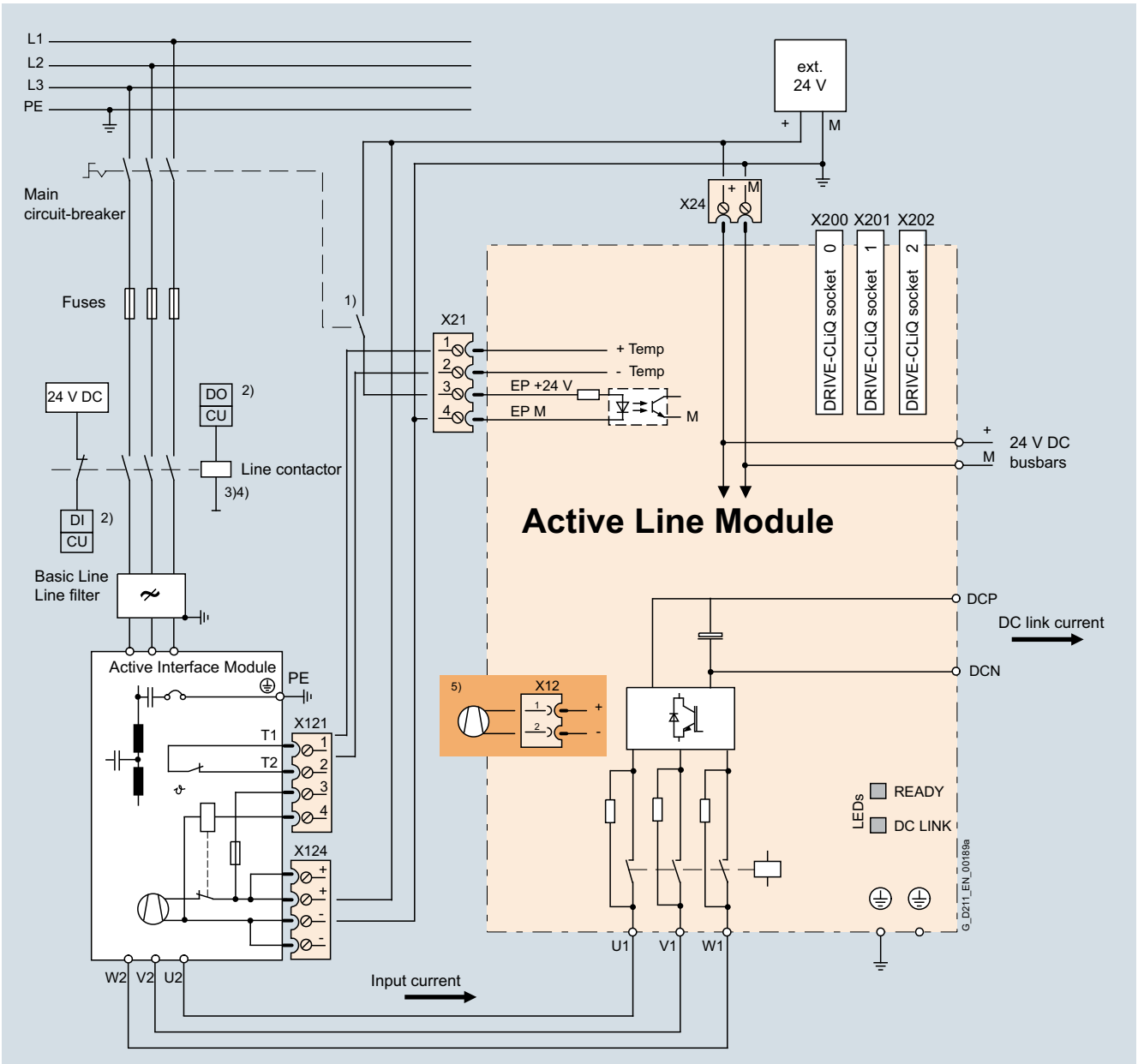

1) Leading NC contact t > 10 ms, 24 V DC and ground must be connected for operation.
2) Digital input (DI) or digital output (DO), controlled by the Control Unit.
3) No additional load permitted downstream of the line contactor.
4) The current carrying capacity of the digital output (DO) must be taken into account; an output interface element may have to be used.
5) Fan insert for Active Line Module of 80 kW (100 hp) and 120 kW (150 hp). The fan insert is supplied with the Active Line Module.

Connection example of Active Line Module in booksize format

© Siemens AG 2017

Selection and ordering data

Rated power kW (hp)	**Active Line Module in booksize format** Article No.
Line voltage 380 ... 480 V 3 AC	
16 (18)	**6SL3130-7TE21-6AA4**
36 (40)	**6SL3130-7TE23-6AA3**
55 (60)	**6SL3130-7TE25-5AA3**
80 (100)	**6SL3130-7TE28-0AA3**
120 (150)	**6SL3130-7TE31-2AA3**

Description	Article No.
Accessories	
Shield connection plate For Line Modules and Motor Modules in booksize format with a width of	
• 150 mm (5.91 in)	**6SL3162-1AF00-0AA1**
• 200 mm (7.87 in)	**6SL3162-1AH01-0AA0**
• 300 mm (11.81 in)	**6SL3162-1AH00-0AA0**
DC link rectifier adapter For direct infeed of DC link voltage	
• Screw-type terminals 0.5 ... 10 mm^2 For Line Modules and Motor Modules in booksize format with a width of 50 mm (1.97 in), 75 mm (2.95 in) and 100 mm (3.94 in)	**6SL3162-2BD00-0AA0**
• Screw-type terminals 35 ... 95 mm^2 For Line Modules and Motor Modules in booksize format with a width of 150 mm (5.91 in), 200 mm (7.87 in) and 300 mm (11.81 in)	**6SL3162-2BM00-0AA0**
DC link adapter (2 units) For multi-tier configuration Screw-type terminals 35 ... 95 mm^2 For all Line Modules and Motor Modules in booksize format	**6SL3162-2BM01-0AA0**
Accessories for re-ordering	
24 V terminal adapter For all Line Modules and Motor Modules in booksize format	**6SL3162-2AA00-0AA0**
24 V jumper For connection of the 24 V busbars (for booksize format)	**6SL3162-2AA01-0AA0**
Terminal Kit (Plug-in terminals, DRIVE-CLiQ jumper (length = module width + 60 mm (2.36 in)), dust protection blanking plugs) For DRIVE-CLiQ port For Active Line Modules with a width of	
• 100 mm (3.94 in)	**6SL3163-8FD00-0AA0**
• 150 mm (5.91 in)	**6SL3163-8GF00-0AA0**
• 200 mm (7.87 in)	**6SL3163-8HH00-0AA0**
• 300 mm (11.8 in)	**6SL3163-8JM00-0AA0**
Warning labels in 30 languages This label set can be glued over the standard German or English labels to provide warnings in other languages. One set of labels is supplied with the devices. One sign in each of the following languages is provided in each set: BG, CN, CZ, DE, DK, EE, ES, FI, FR, GB, GR, HU, IE, IS, IT, JP, KR, LT, LV, MT, NL, NO, PL, PT, RO, RU, SE, SI, SK, TR	**6SL3166-3AB00-0AA0**
Dust protection blanking plugs (50 units) For DRIVE-CLiQ port	**6SL3066-4CA00-0AA0**

Technical specifications

	Active Line Module in booksize format 6SL3130-7TE...
Line voltage (up to 2000 m (6562 ft) above sea level)	380 ... 480 V 3 AC ±10 % (in operation -15 % <1 min)
Line frequency	47 ... 63 Hz
SCCR (short-circuit current rating)	65 kA in conjunction with the recommended Class J fuse, or circuit breaker according to UL489 / CSA 22.2 No. 5-02 see recommended line-side components
Line power factor	
• Active mode	
- Fundamental power factor ($\cos \varphi_1$)	1 (factory setting), can be altered by inputting a reactive current setpoint
- Total (λ)	1 (factory setting)
• Smart Mode	
- Fundamental power factor	>0.96
- Overall	0.65 ... 0.9
Overvoltage category to EN 60664-1	Class III
DC link voltage V_d	In Active Mode, the DC link voltage is regulated and can be adjusted as a voltage decoupled from the line voltage. In Smart Mode, the DC link voltage is kept in proportion to the line voltage at the mean rectified line voltage value. Factory setting for DC link voltage: 380 ... 400 V 3 AC: 600 V (Active Mode) 400 ... 415 V 3 AC: 625 V (Active Mode) 416 ... 480 V 3 AC: 1.35 × line voltage (Smart Mode) [1]
Electronics power supply	24 V DC -15 %/+20 %
Radio interference suppression	
• Standard (Active Line Module + Active Interface Module)	Category C3 to EN 61800-3 up to 350 m (1148 ft) total cable length
• With line filter	Category C2 according to EN 61800-3 up to 350 m (1148 ft) total cable length Category C3 according to EN 61800-3 from 350 m to 1000 m (1148 ... 3281 ft) total cable length
Type of cooling	Internal air cooling (power units with increased air cooling by built-in fan)
Permissible ambient and coolant temperature (air) during operation for line-side components, Line Modules and Motor Modules	0 ... 40 °C (32 ... 104 °F) without derating, > 40 ... 55 °C (104 ... 131 °F), see derating characteristics
Installation altitude	Up to 1000 m (3281 ft) above sea level without derating, > 1000 ... 4000 m (3281 ... 13124 ft) above sea level, see derating characteristics
Declarations of conformity	CE (Low Voltage and EMC Directives)
Certificate of suitability	cULus

[1] Active Mode can also be selected if the connected motors are suitable for > 650 V DC.

© Siemens AG 2017

Technical specifications (continued)

Line voltage 380 ... 480 V 3 AC		Active Line Module in booksize format				
Internal air cooling		6SL3130-7TE21-6AA4	6SL3130-7TE23-6AA3	6SL3130-7TE25-5AA3	6SL3130-7TE28-0AA3	6SL3130-7TE31-2AA3
Infeed/regenerative feedback power						
• Rated power P_{rated}						
- At 380 V 3 AC	kW	**16**	**36**	**55**	**80**	**120**
- At 460 V 3 AC [5]	(hp)	**(18)**	**(40)**	**(60)**	**(100)**	**(150)**
• For S6 duty P_{S6} (40 %)	kW	21	47	71	106	145
• P_{max}	kW	35	70	91 (122) [1]	131	175
DC link current						
• At 600 V DC	A	27	60	92	134	200
• For S6 duty (40 %)	A	35	79	121	176	244
• Maximum	A	59	117	152 (176 [1])	218	292
Input current						
• Rated current at 380/400/480 V 3 AC	A	26/25/21	58/55/46	88/84/70	128/122/102	192/182/152
• For S6 duty (40 %) at 400 V	A	32	71	108	161	220
• At 400 V max.	A	54	107	139 (168 [1])	200	267
Current requirement 24 V DC electronics power supply, max.	A	1.1	1.5	1.9	2	2.5
Current carrying capacity						
• 24 V DC busbars	A	20	20	20	20	20
• DC link busbars	A	100	200	200	200	200
DC link capacitance						
• Active Line Module	µF	710	1410	1880	2820	3995
• Drive line-up, max.	µF	20000	20000	20000	20000	20000
Power loss [2]	kW	0.28	0.67	0.95	1.38	2.24
Cooling air requirement	m^3/s (ft^3/s)	0.016 (0.57)	0.031 (1.09)	0.044 (0.155)	0.144 (4.1)	0.144 (4.1)
Sound pressure level L_{pA} (1 m)	dB	<60	<65	<60	<73	<73
Line connection U1, V1, W1		Screw-type terminals (X1)	M6 screw studs (X1)	M8 screw studs (X1)	M8 screw studs (X1)	M8 screw studs (X1)
• Conductor cross-section, max.	mm^2	2.5 ... 10	2.5 ... 50	2.5 ... 95, 2 × 35	2.5 ... 120, 2 × 50	2.5 ... 120, 2 × 50
Shield connection		Integrated in the connector	See Accessories	See Accessories	See Accessories	See Accessories
PE connection		M5 screw	M6 screw	M6 screw	M8 screw	M8 screw
Cable length, max. Total of all motor cables and DC link						
• Shielded	m (ft)	630 (2067) [3]	630 (2067) [3]	1000 (3281)	1000 (3281)	1000 (3281)
• Unshielded	m (ft)	850 (2789)	850 (2789)	1500 (4922)	1500 (4922)	1500 (4922)
Degree of protection		IP20	IP20	IP20	IP20	IP20
Dimensions						
• Width	mm (in)	100 (3.94)	150 (5.91)	200 (7.87)	300 (11.81)	300 (11.81)
• Height	mm (in)	380 (14.96)	380 (14.96)	380 (14.96)	380 (14.96)	380 (14.96)
- With fan [4]	mm (in)	–	–	–	629 (24.76)	629 (24.76)
• Depth	mm (in)	270 (10.63)	270 (10.63)	270 (10.63)	270 (10.63)	270 (10.63)
Weight, approx.	kg (lb)	7 (15.4)	10 (22.0)	17 (37.5)	23 (50.7)	23 (50.7)

1) Higher peak output is possible in combination with the Active Interface Module 6SL3100-0BE25-5AB0 (for operating cycle constraints, see SINAMICS S120 Manual).

2) Power loss of Active Line Module at rated output including losses of 24 V DC electronics power supply.

3) Max. cable lengths in combination with Active Interface Module and Basic Line Filter (Category C3 according to EN 61800-3).

4) The fan is supplied together with the Active Line Module and must be installed before the Active Line Module is commissioned.

5) Nominal hp ratings are provided for ease of assigning components only. The Line Module outputs are dependent on the Motor Module loading and are to be dimensioned accordingly.

© Siemens AG 2017

Overview



Active Interface Modules for 16 kW, 36 kW, 55 kW and 80 kW/120 kW

The Active Interface Modules combine with the Active Line Modules to form a functional unit and are required for operation of the associated Active Line Module. The Active Interface Modules contain a Clean Power Filter and basic interference suppression to ensure compliance with Category C3 in accordance with EN 61800-3 with respect to emitted interference.

The Clean Power Filter protects the mains connection from switching-frequency harmonics. The drive system therefore draws a sinusoidal current from the supply and causes almost no harmonics.

The Active Line Modules in combination with the Active Interface Module can also be operated with supply systems with an isolated star point (IT supply systems).

Design

The scope of supply of the Active Interface Modules includes:

- Connector X21 for temperature evaluation and fan control
- Connector X24 for connecting the 24 V supply for the integrated fan
- DRIVE-CLiQ cable for connecting the Control Unit to the Active Interface Module; length of the DRIVE-CLiQ cable = width of the Active Interface Module + 0.11 m (4.33 in)
- Shield connection plate for Active Interface Module 16 kW
- 1 set of warning signs in 30 languages

Selection and ordering data

Rated power of the Active Line Module kW (hp)	Suitable for Active Line Module in booksize format	**Active Interface Module** Article No.
Line voltage 380 ... 480 V 3 AC		
16 (18)	6SL3130-7TE21-6AA4	**6SL3100-0BE21-6AB0**
36 (40)	6SL3130-7TE23-6AA3	**6SL3100-0BE23-6AB0**
55 (60)	6SL3130-7TE25-5AA3	**6SL3100-0BE25-5AB0**
80 (100)	6SL3130-7TE28-0AA3	**6SL3100-0BE28-0AB0**
120 (150)	6SL3130-7TE31-2AA3	**6SL3100-0BE31-2AB0**

Description	Article No.
Accessories	
Shield connection plate [1]	
• For Active Interface Module 36 kW (40 hp)	**6SL3163-1AF00-0AA0**
• For Active Interface Module 55 kW (60 hp)	**6SL3163-1AH00-0AA0**
• For Active Interface Module 80 kW (100 hp) and 120 kW (150 hp)	**6SL3163-1AM00-0AA0**
DRIVE-CLiQ cable, pre-assembled Degree of protection of connector IP20/IP20	
• For Active Interface Module 16 kW (18 hp), 0.31 m (1.02 ft) in length	**6SL3060-4AK00-0AA0**
• For Active Interface Module 36 kW (40 hp), 0.41 m (1.35 ft) in length	**6SL3060-4AP00-0AA0**
• For Active Interface Module 55 kW (60 hp), 0.6 m (1.97 ft) in length	**6SL3060-4AU00-0AA0**
• For Active Interface Module 80 kW (100 hp) and 120 kW (150 hp), 0.95 m (3.12 ft) in length	**6SL3060-4AA10-0AA0**
Accessories for re-ordering	
Terminal Kit (plug-in terminals, DRIVE-CLiQ jumper)	
• For Active Interface Module 16 kW (18 hp)	**6SL3160-8CD10-0AA0**
• For Active Interface Module 36 kW (40 hp)	**6SL3160-8DF10-0AA0**
• For Active Interface Module 55 kW (60 hp)	**6SL3160-8EH10-0AA0**
• For Active Interface Modules 80 kW (100 hp) and 120 kW (150 hp)	**6SL3160-8FM10-0AA0**
Warning labels in 30 languages This label set can be glued over the standard German or English labels to provide warnings in other languages. One set of labels is supplied with the devices. One sign in each of the following languages is provided in each set: BG, CN, CZ, DE, DK, EE, ES, FI, FR, GB, GR, HU, IE, IS, IT, JP, KR, LT, LV, MT, NL, NO, PL, PT, RO, RU, SE, SI, SK, TR	**6SL3166-3AB00-0AA0**

[1] For Active Interface Module 16 kW, included in scope of supply.

© Siemens AG 2017

Integration

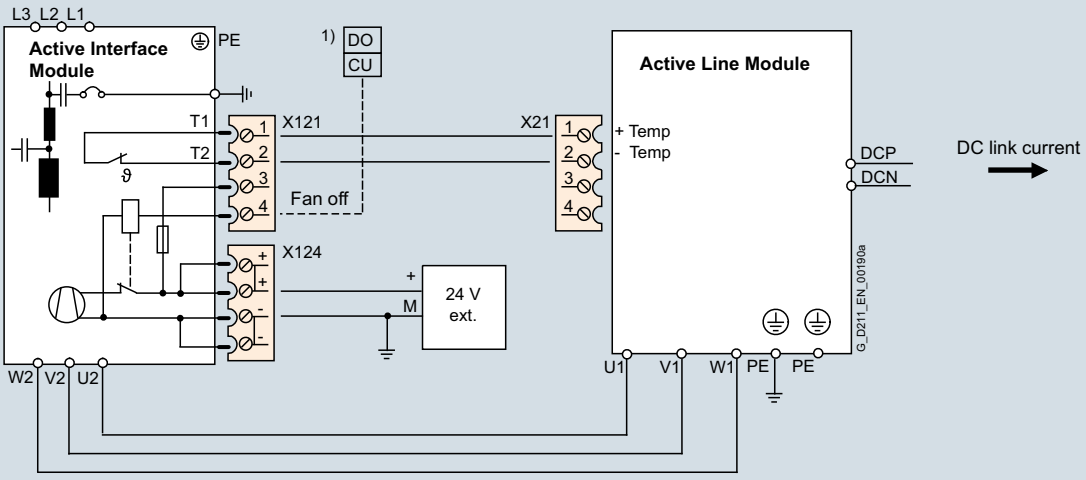

1) Digital input (DI) or digital output (DO), controlled via Control Unit.

Connection example for Active Interface Module

The Active Interface Module requires a 24 V DC supply for operation of the integral fan.
The fan rotates after the 24 V DC supply is applied and can, if necessary (service life, noise), be disconnected from the Control Unit over the "Fan off" input. It is only permitted to switch off the fan when the infeed of the drive system is not operating, otherwise the Active Interface Module will overheat.

The thermostatic switch installed in the Active Interface Module is evaluated over the connected Active Line Module.

The power cables between the Active Interface Module and Active Line Module must be shielded if limit values for interference suppression are to be complied with. The cable shield can be routed over the shield connection plate (option) to the Active Interface Module or Active Line Module.

Depending on the position of the Active Interface Module in the drive system, additional DRIVE-CLiQ cables may be required. If it is separately installed next to the left side of the Control Unit and Active Line Module, no additional DRIVE-CLiQ cables are required. If the Active Interface Module is placed between the Control Unit and Active Line Module, the DRIVE-CLiQ cables supplied with the Active Line Modules are suitable for setting up a line topology, i.e. Active Line Module and all Motor Modules in series on one DRIVE-CLiQ line. If the Active Line Module is connected over a separate DRIVE-CLiQ line, the DRIVE-CLiQ cable marked with (1) must be ordered. A DRIVE-CLiQ cable suitable for connection (2) is included in the scope of supply of the Active Line Module.

For DRIVE-CLiQ cables for different configurations, see section MOTION-CONNECT connection systems.

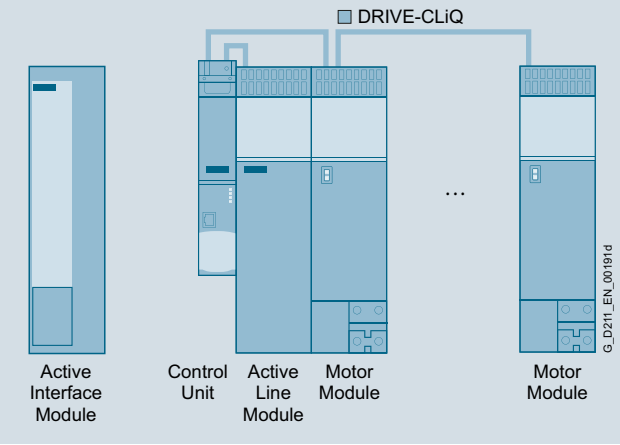

Separate Active Interface Module

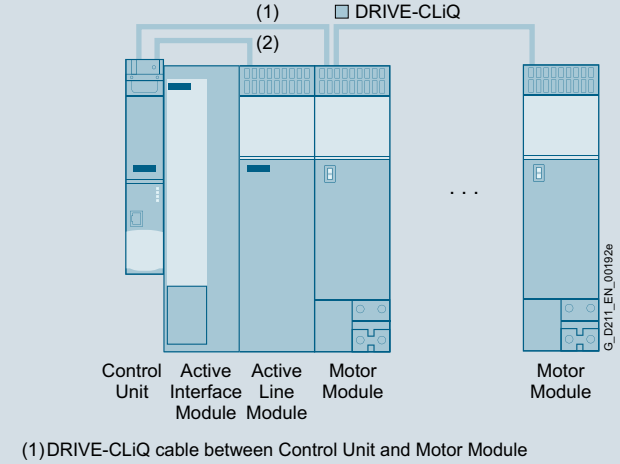

(1) DRIVE-CLiQ cable between Control Unit and Motor Module
Active Interface Module 16 kW: 0.31 m
Active Interface Module 36 kW: 0.41 m
Active Interface Module 55 kW: 0.60 m
Active Interface Module 80 kW and 120 kW: 0.95 m
(2) Included in scope of supply of Active Line Modules

Active Interface Module integrated in the drive line-up

© Siemens AG 2017

Technical specifications

Line voltage 380 ... 480 V 3 AC		**Active Interface Module**				
Internal air cooling		6SL3100-0BE21-6AB0	6SL3100-0BE23-6AB0	6SL3100-0BE25-5AB0	6SL3100-0BE28-0AB0	6SL3100-0BE31-2AB0
Rated current	A	26	58	88	128	192
Current requirement 24 V DC electronics power supply, max.	A	0.25	0.49	0.6	1.2	1.2
Internal resistance Digital input "Fan off" (X21/Pin 4)	Ω	1440 ±10 %	1440 ±10 %	1440 ±10 %	1440 ±10 %	1440 ±10 %
Power loss	kW	0.27	0.34	0.38	0.49	0.585
Cooling air requirement	m^3/s (ft^3/s)	0.03 (1.1)	0.04 (1.4)	0.083 (2.9)	0.167 (5.9)	0.167 (5.9)
Sound pressure level L_{pA} (1 m)	dB	57	60	66	68	68
Line supply/load connection L1, L2, L3/U2, V2, W2		Connector	Screw terminals	Screw terminals	M8 screw studs	M8 screw studs
• Conductor cross-section	mm^2	16	50	50	2.5 … 120 or 2 × 50	2.5 … 120 or 2 × 50
Thermostatic switch (NC contact)						
• Switching capacity		250 V AC/1.6 A 60 V DC/0.75 A	250 V AC/1.6 A 60 V DC/0.75 A	250 V AC/1.6 A 60 V DC/0.75 A	250 V AC/1.6 A 60 V DC/0.75 A	250 V AC/1.6 A 60 V DC/0.75 A
PE connection		M5 screw	M6 screw	M6 screw	M8 screw	M8 screw
Degree of protection		IP20	IP20	IP20	IP20	IP20
Dimensions						
• Width	mm (in)	100 (3.94)	150 (5.91)	200 (7.87)	300 (11.81)	300 (11.81)
• Height	mm (in)	380 (14.96)	380 (14.96)	380 (14.96)	380 (14.96)	380 (14.96)
• Depth	mm (in)	270 (10.63)	270 (10.63)	270 (10.63)	270 (10.63)	270 (10.63)
Weight, approx.	kg (lb)	11.6 (25.6)	19 (41.9)	23.2 (51.2)	31.9 (70.3)	36.6 (80.7)
Certificate of suitability		cURus	cURus	cURus	cURus	cURus
Suitable for Active Line Module in booksize format	Type	6SL3130-7TE21-6AA4	6SL3130-7TE23-6AA3	6SL3130-7TE25-5AA3	6SL3130-7TE28-0AA3	6SL3130-7TE31-2AA3
• Rated power of the Active Line Module	kW (hp)	16 (18)	36 (40)	55 (60)	80 (100)	120 (150)