1.1.2 List of Modules

Table 1.1 lists the Modules and devices used for the MP920 system.

Table 1.1 List of Modules

Group	Name	Model Number	Description	Slots Used	Remarks
Power Supply Modules	DC Power Supply Module	JEPMC-PS200	PS-03	Dedicated	24-VDC input power supply
	AC Power Supply Module	JEPMC-PS210	PS-01	Dedicated	100/200-VAC input power supply
CPU Modules	CPU Module	JEPMC-CP200	CPU-01	2	MP920 CPU (2-MB memory)
	CPU Module	JEPMC-CP210	CPU-02	2	MP920 CPU (4-MB memory)
I/O Modules	Input Module	JEPMC-IO200	DI-01	1	64 input points
	Output Module	JEPMC-IO210	DO-01	1	64 output points
	I/O Module	JEPMC-IO220	LIO-01	1	32 input points and 32 output points
Servo Modules	4-axis Servo Module	JEPMC-MC200A	SVA-01A	2	4-axis servo for analog output
	2-axis Servo Module	JEPMC-MC220A	SVA-02A	1	2-axis servo for analog output
	MECHATROLINK Interface Servo Module	JEPMC-MC210	SVB-01	1	MECHATROLINK interface servo (14 axes max.)
Pulse Modules	Pulse Input Module	JEPMC-PL200	CNTR-01	1	4-channel pulse input
	Pulse Output Module	JEPMC-PL210	PO-01	1	4-channel pulse output
Analog Modules	Analog Input Module	JEPMC-AN200	AI-01	1	4-channel analog input
	Analog Output Module	JEPMC-AN210	AO-01	1	4-channel analog output
Communications Module	Communications Module	JEPMC-CM200	217IF	1	RS-232C/RS422 communications
	Communications Module	JEPMC-CM210A	218IFA	1	Ethernet communications
	Communications Module	JEPMC-CM220	215IF	1	215IF communications
	Communications Module	JEPMC-CM230	260IF	1	DeviceNet interface module
Expansion Module	Expansion Interface Module	JEPMC-EX200	EXIOIF	1	System bus expansion interface
Mounting Bases	Long Mounting Base	JEPMC-MB200	MB-01	−	Long mounting base (power supply + 9 slots)
	Short Mounting Base	JEPMC-MB210	MB-02	−	Short mounting base (power supply + 6 slots)

■ CPU Module (CPU-01)

Table 2.4 shows the hardware specifications of the CPU-01 Module.

Table 2.4 Hardware Specifications of the CPU-01 Module

Item	Specifications	
Name	CPU Module	
Model Number	JEPMC-CP200	
Description	CPU-01	
Memory	FLASH	2MB
	SRAM	2MB (battery backup)
Communications Ports	RS-232C × 2 ports Baud rate: 9.6/14.4/19.2 kbps Female 9-pin D-sub connector (special pin assignments) Protocols: • MEMOBUS • No protocol • MELSEC	
Current Consumption	980 mA	
Indicators	Module status LED indicators READY (green) RUN (green) ALM (red) ERR (red) BATALM (red) PRT2 (green) PRT1 (green)	
Setting Switch	Mode setting DIP switch L.RST RUN/STOP INITIAL TEST – MULTI FLASH M.RST	
Dimensions (mm)	80 × 130 × 105 (W × H × D)	

5.2 CPU Modules

5.2.1 CPU-01 Module

The following illustration shows the appearance of the CPU-01 CPU Module.

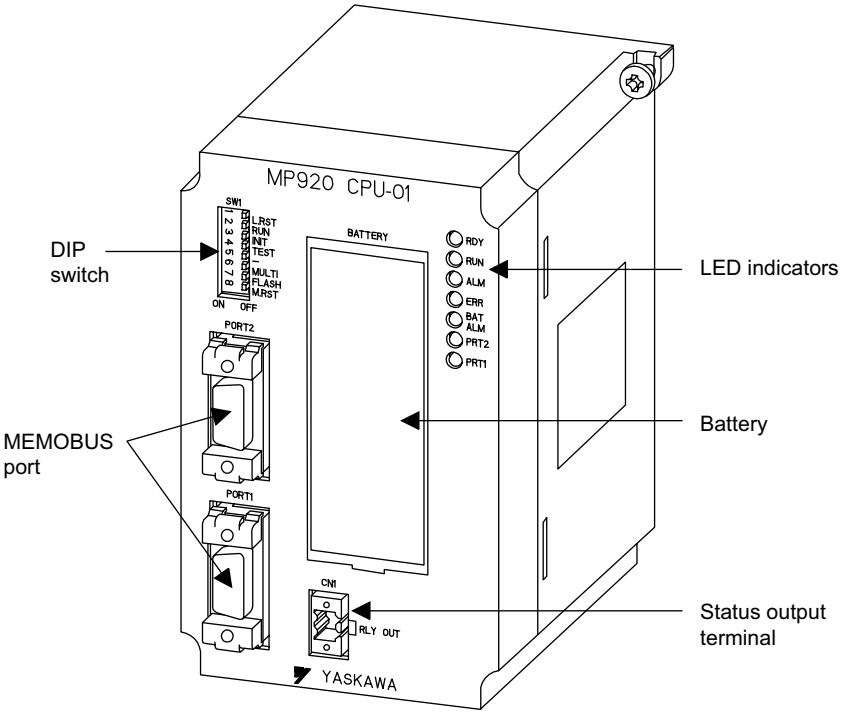

The details of each part of the CPU-01 Module are described below.

■ LED Indicators



Indicator Name	Indicator Color	Meaning When Indicator Is Lit
RDY	Green	System operating normally.
RUN	Green	User program running.
ALM	Red	Minor system failure occurred.
ERR	Red	System fault or failure occurred.
BAT ALM	Red	Battery needs replacing.
PRT2	Green	Port 2 sending data.
PRT1	Green	Port 1 sending data.

■ DIP Switch

The DIP switch consists of eight pins. The pins are numbered 1 to 8, as shown in the diagram with *Table 5.2*.

Each pin is ON when it is moved to the left.

The pins other than L.RST and M.RST are valid only when the power turns ON and at the startup after resetting.

Turn OFF the power and then ON again when changing the mode.

The function of each pin is described below.

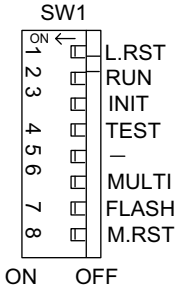

Table 5.2 DIP Switch Functions

Pin	Name	Setting	Function	Default
1	L. RESET	ON	Local reset	OFF
		OFF	Online	
2	RUN	ON	User program executed.	ON
		OFF	User program stopped.	
3	INITIAL	ON	Pin 4 ON: Memory cleared.	OFF
		OFF	Pin 4 ON: Setting disabled.	
4	TEST	ON	Iinitialization mode	OFF
		OFF	Online	
5	PP Defaults	ON	Defaults for port 1 only	OFF
		OFF	Use memory settings.	
6	MULTI	ON	Multiple CPU in configuration	OFF
		OFF	Single CPU in configuration	
7	FLASH	ON	Program copied from flash memory to RAM.	OFF
		OFF	Program not copied from flash memory to RAM.	
8	M.RST	ON	Master reset	OFF
		OFF	Online	

Switch Setting	Function	Explanation
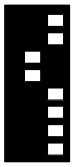	Memory clear	Initializes the CPU Module. Perform this operation when starting the system.
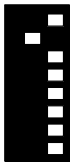	Program run	Runs the user program. Normally, this setting is used during system operation.
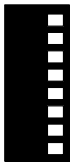	Program stop	Stops the user program.
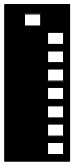	Local reset	Resets only the CPU Module. (Other Modules will not be reset.)
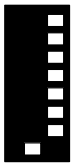	Master reset	Resets all Modules.

■ MEMOBUS Ports

Using RS-232C, the CPU Module can communicate with other devices on the MEMOBUS network through the MEMOBUS ports.

The following transmission devices can be connected to the MEMOBUS ports: Programming Devices, i.e., computers with an RS-232C interface.

The MEMOBUS port connector is a D-sub 9-pin, female connector. *Table 5.3* shows the layout of the connector pins and the signal names.

Table 5.3 MEMOBUS Port Layout and Signal Names

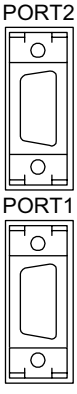

Pin	Abbreviation	Signal Name
1	FG	Protective ground
2	TXD	Transmitting data
3	RXD	Receiving data
4	RTS	Request to send
5	CTS	Clear to send
6	DSR	Data set ready
7	GND	Signal ground
8	–	
9	DTR	Data terminal ready

MEMOBUS Port Connection Example

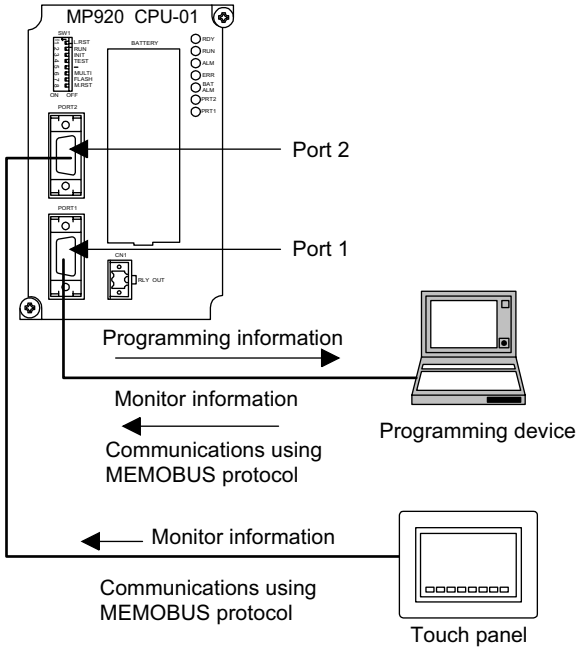

Fig. 5.1 Example of Touch Panel Connected to the Port 2

■ Status Output Terminals

The status output terminals output the RDY status of the CPU Module.

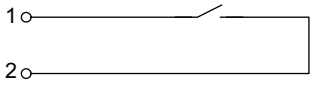

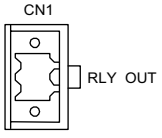

Pin	I/O	Remarks
1	OUT	During normal operation: Short-circuited During abnormal operation: Released
2	OUT	

The control rating: 0.5 A at 24 VDC, 0.5 A at 125 VAC

■ Battery

The battery is used as backup power supply for the SRAM.

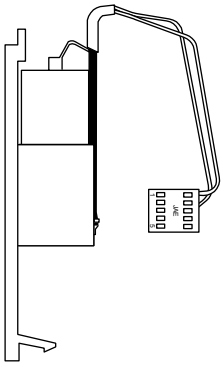

Pin	Signal Name	I/O	Remarks
1	GND	I	Battery Connector Battery: ZZK000062 Battery (ER6VC Lithium Battery from Toshiba)
2	BAT	I	
3	BAT	I	
4	(NC)	I	
5	GND	I	

■ Connector Specifications

The following table shows the specifications of the connectors used to connect the CPU-01 Module.

Name	Connector Name	No. of Pins	Connector Model			Cable Model
			Module	Cable-end	Manufacturer	
Serial Port 1	PORT1	9	D-sub,9-pin female	D-sub,9-pin male		JEPMC-W5310-□□ JEPMC-W5311-□□
Serial Port 2	PORT2	9	D-sub,9-pin female	D-sub,9-pin male		JEPMC-W5310-□□ JEPMC-W5311-□□
Status Output Terminals	CN1	2	SL3.5-2-90F	BL3.5 / 2F-AU	Weidmüller	The CN1 connector is provided on the CPU-01 Module. The connection cable must be prepared by the customer.

■ Connector Pin Layour (Serial Ports)

The pin layout of the serial port 1 and 2 is shown below.

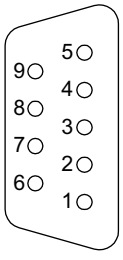

Pin Layout at Connection Side

Pin No.	Description	Signal Name
1	FG	Protective grounding
2	TXD	Send data
3	RXD	Receive data
4	RTS	Request to send
5	CTS	Clear to send
6	DSR	Data set ready
7	GND	Signal grounding
8	–	–
9	DTR	Data terminal ready

■ Serial Port Connection Cable

Model

JEPMC-W5311-□□

Appearance



Cable Connection Diagram

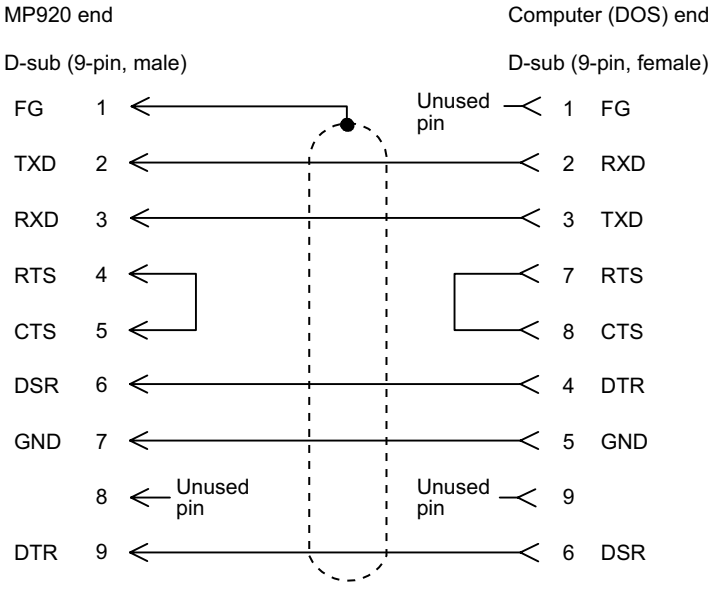

6.2 System Startup Procedure

This section explains the procedure when a Test System is used for positioning control. Refer to the relevant reference manuals for the operation required for each procedure. Details of the machine system design have been omitted here.

6.2.1 Installing the Modules

Install the Power Supply, CPU, Input, Output, and other Modules on the Mounting Base.

■ Installation Position of Each Module

The installation position of the Power Supply Module is fixed, but other Modules can be installed in any other position.

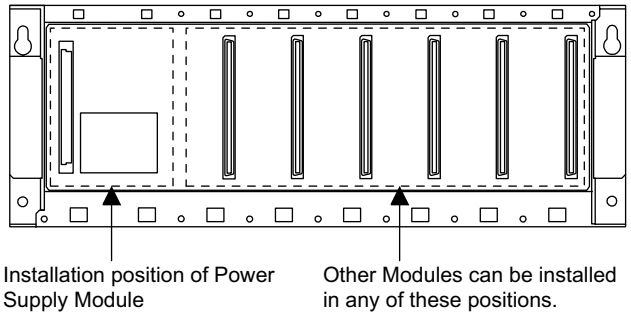

■ Procedure for Installing Modules

The large and small protrusions on the back of each Module fit into the corresponding holes in the Mounting Base.

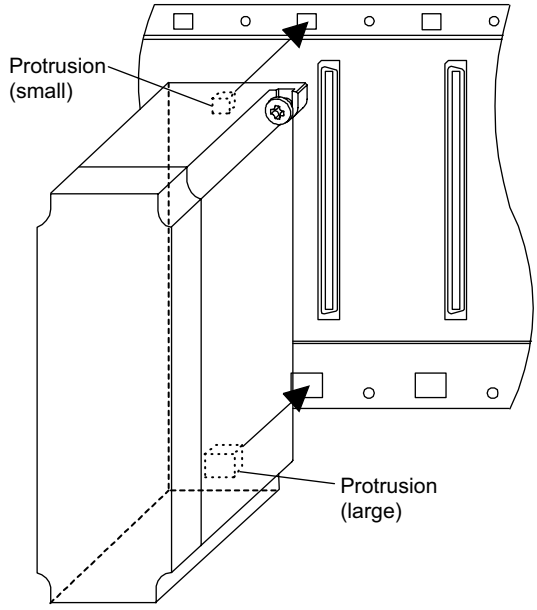

Use the following procedure to install a Module.

1. Align the two protrusions on the back of the Module with the module mounting holes in the Mounting Base.

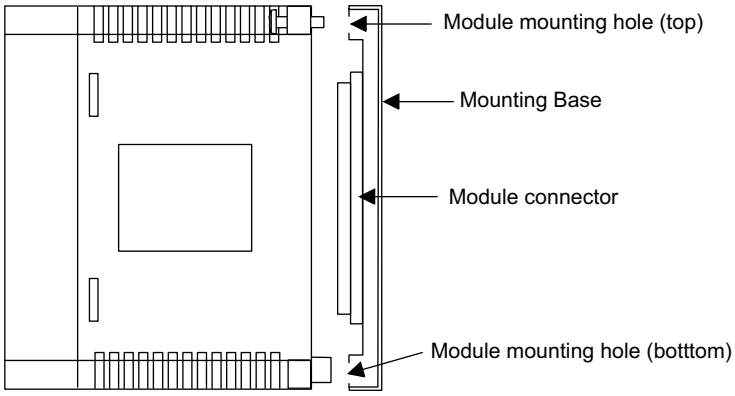

2. Press the Module onto the Mounting Base so that the connector on the back of the Module fits into the connector on the Mounting Base.

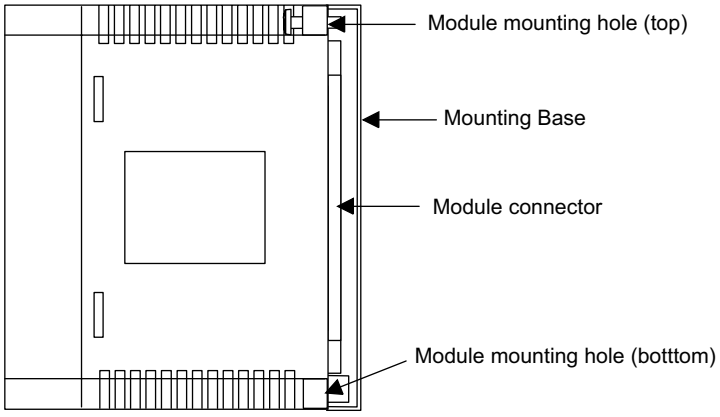

3. Tighten the top and bottom module mounting screws with a Phillips screwdriver.

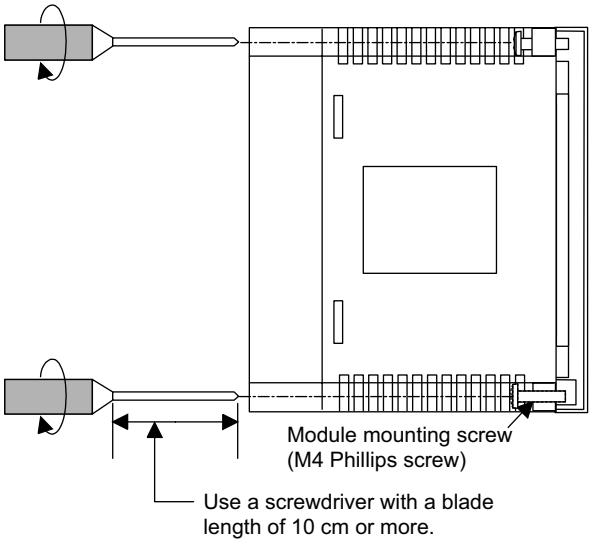

This completes the installation procedure.