Variable	Description	Direction	Type
Batt_24G_LED	24 V battery floating	Input	BOOL
JPDD_24D_LED	24 V JPDD feeds OK	Input	BOOL
Pbus_24P_LED	24 V Pbus feeds OK	Input	BOOL
AC_Input1_LED	Ac input 1 OK	Input	BOOL
AC_Input2_LED	Ac input 2 OK	Input	BOOL
AC_JPDA_LED	Ac JPDA feeds OK	Input	BOOL
AC_Pbus_LED	Ac Pbus feeds OK	Input	BOOL
JPDR_LED	JPDR Src Select OK	Input	BOOL
Accelerometer_X	Vibration input, X-coordinate	AnalogInput	REAL
Accelerometer_Y	Vibration input, Y-coordinate	AnalogInput	REAL
App_1_LED	Application driven	Output	BOOL
App_2_LED	Application driven	Output	BOOL
App_3_LED	Application driven	Output	BOOL
Fault_LED	Fault Led - Application driven)	Output	BOOL

Parameter	Description	Selections
InFiltEnb1	Enable inputs filtering for terminal board #1	Disable, Enable
InFiltEnb2	Enable inputs filtering for terminal board #2	Disable, Enable
InFiltEnb3		Disable, Enable
InFiltEnb4		Disable, Enable
InFiltEnb5		Disable, Enable
InFiltEnb6		Disable, Enable

DS2020DACAG2 ac-dc Power Conversion

Functional Description

The DS2020DACAG2 is a drop in replacement for the DS2020DACAG1. It is backward compatible in systems that used the previous version and it should be used as a replacement part for the previous model. The DACA converts 115/230 V ac input power into 125 V dc output power, and the output power rating is approximately 1000 W.

A DACA is used when the primary power source for a control system is 125 V dc with or without a battery. In addition to power conversion, DACA provides additional local energy storage to extend the ride-through time whenever the Mark VIe Control has a complete loss of control power.

The DS2020DACAG2 model has a higher power rating than the previous module. Also, this new model can be paralleled for greater output current, whereas paralleling was not recommended for the previous model. The DS2020DACAG2 is recommended for all new panel designs.

Installation

The DACA module has four mounting holes in its base. Ac power input and dc output is through a single 12-position connector JZ that is wired into connector JZ2 or JZ3 of the PDM. Selection of 115 V ac or 230 V ac input is made by plugging the DACA internal cable into connector JTX1 for 115 V or JTX2 for 230 V.

Caution

Ensure the proper voltage is selected before power is applied to the equipment.

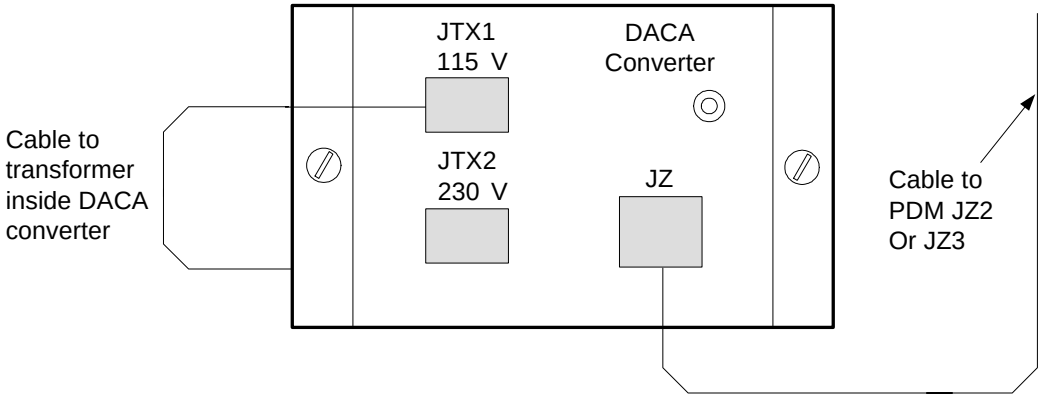

DACA Module Wiring

DACA Filter Capacitor Wear Out

The electrolytic capacitors in the DACA module wear out over time due to the ambient temperature of the environment where they are used. The following table shows the calculated life expectancy and recommended replacement schedule for the DACA modules.

DACA Replacement Schedule

Calculated Life Expectancy of DACA Capacitor	Recommended Replacement Schedule*
At 20°C (68 °F) ambient	100 years
At 45°C (113 °F) ambient	20 years
At 65°C (149 °F) ambient	5 years

*Due to wear out of Electrolytic Capacitor

➢ **To replace a DACA power conversion module**

1. Remove power from the DACA module. Allow 1 minute for the output voltage to discharge.
2. Remove the power input/output cable (JZ) on the right side of the module top.
3. Remove the four bolts securing the DACA module to the floor of the cabinet.
4. Remove the DACA module.
5. Make note of which receptacle the capacitor power plug is in. This is on the left side of the module top. JTX1 is for 115 V ac and JTX2 is for 230 V ac.
6. Ensure the capacitor power plug is in the same position as the one removed. JTX1 is for 115 V ac and JTX2 is for 230 V ac.
7. Place the new DACA module in the same position as the one removed.

8 Secure the DACA module to the cabinet floor with the four bolts removed from the previous module.

9 Install the power input/output plug (JZ) on the right side of the module top.

10 Restore power to the DACA module.

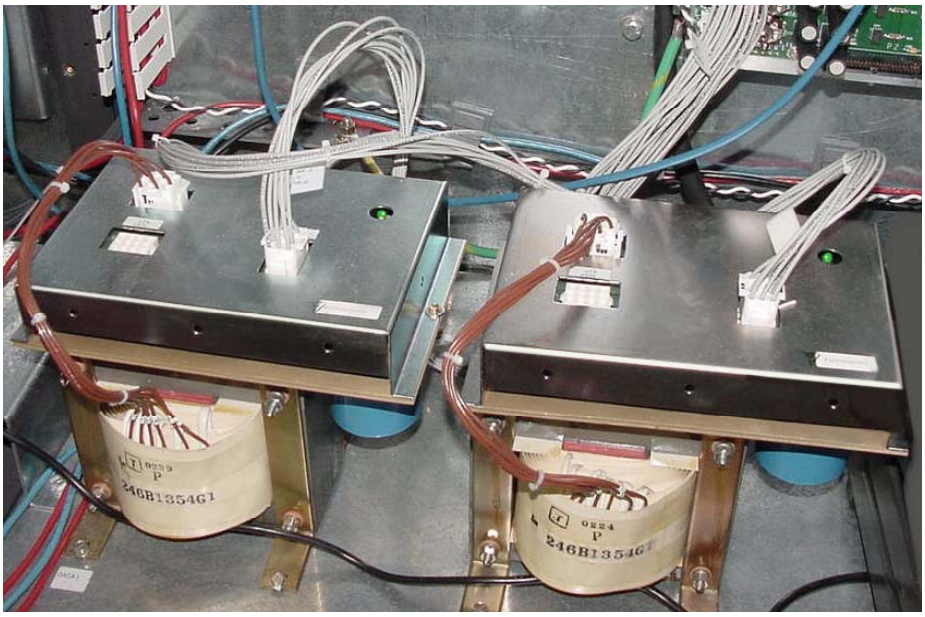

DACA Power Conversion Modules

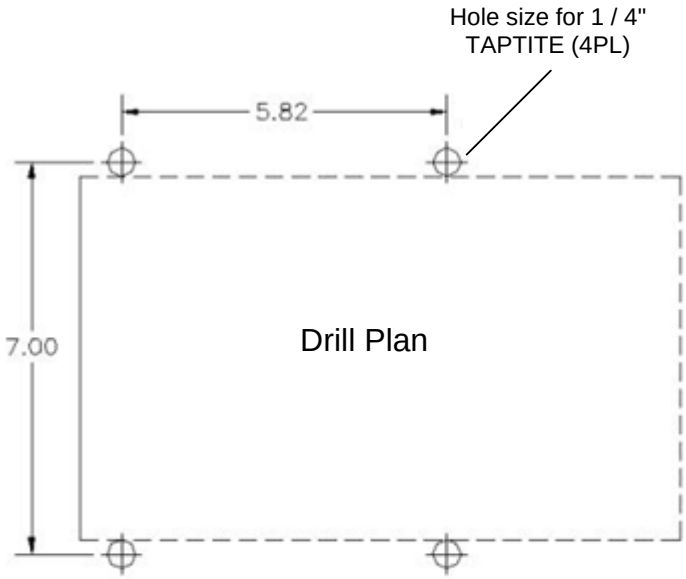

Note: Keep out area is 8.65 in. x 13.9 in.

DACA Mounting Pattern

Operation

DACA receives ac power through the cable harness that is plugged into connector JZ. DACA uses a full wave bridge rectifier and an output filter capacitor. If needed, the user must provide an input filter to attenuate harmonic currents injected into the incoming line.

Single DACA Module, Maximum Output Current is 9.5 A dc

Input to DACA V ac RMS	Input Current at Max Load	Output Voltage Load = 1 A dc	Output Voltage Load = 9.5 A dc
115 V ac	11 A	119 V dc	107 V dc
230 V ac	6 A		

The DACAG2 can be paralleled for greater output current. In parallel operation, current sharing between the two DACAs is critical. Uneven current sharing can cause one of the DACAs to operate beyond its output current rating.

*Two DACA Modules with Outputs Paralleled, Maximum Output Current is 16.5 A dc**

Input to DACA V ac RMS	Input Current at Max Load	Output Voltage Load = 1 A dc	Output Voltage Load = 15 A dc
115 V ac	20 A	120 V dc	110 V dc
230 V ac	11 A		

* The two paralleled DACAs must be connected to one ac voltage source for even output current sharing.

For proper implementation of parallel DACAs, the following must be observed:

- The DACAs must be connected to the same ac source to ensure equal input voltages to the DACAs.
- The maximum output current per DACA is derated for parallel operation. This derating accounts for variance in DACA open circuit voltages and variance in DACA output impedances. The following curve should be used. The maximum recommended total panel current is 16.5 A dc.

Probability of overloading one DACA when two DACAs are paralled; Plotted at various panel loads

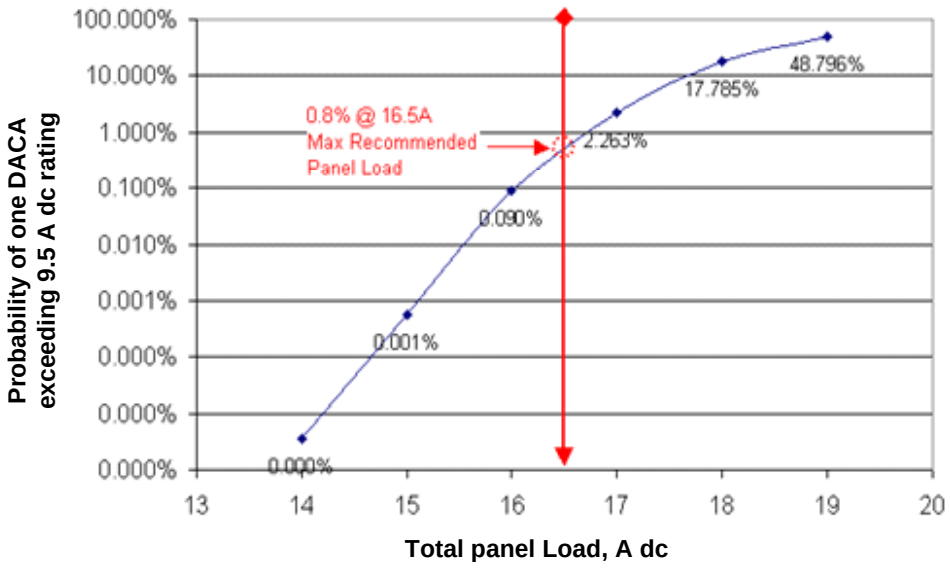

Specifications

Item	Specification			
Input Voltage	105-132 V ac or 210-265 V ac, 47 to 63 Hz			
Output Voltage	90 to 145 V dc with a load of 1 to 9.5 A			
	Over the full range of input voltage			
Output Current Rating	9.5 A dc, -30 to 45°C (-22 to 113 °F)			
	Linearly derate to 7.5 A dc at 60°C (140 °F)			
Output Ripple Voltage	4 V p-p			
Discharge Rate	Nominal input of 115 or 230 V ac, no load, discharge to less than 50 V dc within 1 minute of removal of input power.			
Hold Up (time for output to discharge to 70 V dc with constant power load)	V in (V ac)	105	115	132
	Initial Load (A dc)	9.5	9.5	9.5
	Pout (W)	882	974	1131
	Hold Up Time (ms)	19.5	29.5	48.8
Temperature	-30 to 60°C (-22 to +140 °F) free convection			
Humidity	5 to 95%, non-condensing			
	UL 508C Safety Standard Industrial Control Equipment			
	CSA 22.2 No. 14 Industrial Control Equipment			
	EN 61010 Section 14.7.2 – Overload Tests			
	EN 61010 Section 14.7.1 – Short Circuit Test			
	EN 61000-4-2 Electrostatic Discharge Susceptibility			
	EN 61000-4-3 Radiated RF Immunity			
	EN 61000-4-4 Electrical Fast Transient Susceptibility			
	EN 61000 –4-5 Surge Immunity			
	EN61000-4-6 Conducted RF Immunity			
	EN 50082-2:1994 Generic Immunity Industrial Environment			
	ENV 55011:1991 - ISM equipment emissions			
	IEC 529 Intrusion Protection Codes/NEMA 1/IP 20			

Diagnostics

No diagnostic features are provided on this module.

Configuration

Input voltage selection is made on DACA by plugging the captive cable harness into connector JTX1 for 115 V ac nominal input or connector JTX2 for 230 V ac nominal input.