GE Fanuc Series Six Plus

8-Slot Rack with Power Source



$1995.00

In Stock

Qty Available: 1

New From Surplus Stock

Open Web Page

https://www.artisantg.com/66281-1

ARTISAN TECHNOLOGY GROUP

Your **definitive** source for quality pre-owned equipment.

Artisan Technology Group

(217) 352-9330 | sales@artisantg.com | artisantg.com

All trademarks, brandnames, and brands appearing herein are the property of their respective owners.

- Critical and expedited services
- In stock / Ready-to-ship
- We buy your excess, underutilized, and idle equipment
- Full-service, independent repair center

Artisan Scientific Corporation dba Artisan Technology Group is not an affiliate, representative, or authorized distributor for any manufacturer listed herein.

Programmable Control Products

Archive Document

This electronic manual was created by scanning a printed document, then processing the file using character-recognition software.

Please be aware that this process may have introduced minor errors. For critical applications, use of a printed manual is recommended.

Series Six Plus
Programmable Logic Controller

User's Manual

GEK-96602A *November 1987*

Artisan Technology Group - Quality Instrumentation ... Guaranteed | (888) 88-SOURCE | www.artisantg.com

Warnings, Cautions, and Notes as Used in this Publication

Warning

Warning notices are used in this publication to emphasize that hazardous voltages, currents, temperatures, or other conditions that could cause personal injury exist in this equipment or may be associated with its use.

In situations where inattention could cause either personal injury or damage to equipment, a Warning notice is used.

Caution

Caution notices are used where equipment might be damaged if care is not taken.

Note

Notes merely call attention to information that is especially significant to understanding and operating the equipment.

This document is based on information available at the time of its publication. While efforts have been made to be accurate, the information contained herein does not purport to cover all details or variations in hardware or software, nor to provide for every possible contingency in connection with installation, operation, or maintenance. Features may be described herein which are not present in all hardware and software systems. GE Fanuc Automation assumes no obligation of notice to holders of this document with respect to changes subsequently made.

GE Fanuc Automation makes no representation or warranty, expressed, implied, or statutory with respect to, and assumes no responsibility for the accuracy, completeness, sufficiency, or usefulness of the information contained herein. No warranties of merchantability or fitness for purpose shall apply,

The following are trademarks of GE Fanuc Automation North America, Inc.

Alarm Master	GEnet	Modelmaster	Series One
CIMPLICITY	Genius	ProLoop	Series Six
CIMPLICITY PowerTRAC	Genius PowerTRAC	PROMACRO	Series Three
CIMPLICITY 90-ADS	Helpmate	Series Five	VuMaster
CIMSTAR	Logicmaster	Series 90	Workmaster
Field Control			

*Copyright 1995 GE Fanuc Automation North America, Inc.
AI1 Rights Reserved

Artisan Technology Group - Quality Instrumentation ... Guaranteed | (888) 88-SOURCE | www.artisantg.com

PREFACE

This is the second edition of the Series Six'" Plus Programmable Logic Controller User's Manual. This manual provides the user with the information required to configure, install, implement and maintain the Series Six'" Plus Programmable Logic Controller.

Chapter 1. Introduction to the Series Six Plus PLC. This chapter describes the features, functions and specifications of the Series Six Plus PLC, along with information on programming, communications options and optional peripheral equipment that can be included as part of your Series Six Plus PLC system. A cross reference guide is included listing the compatibility of the Series Six Plus PLC vs the previously available Series Six family of PLCs.

Chapter 2. Physicaf Equipment Configuration. This chapter describes the hardware components included in a Series Six Plus PLC system. The CPU rack configuration is such that it contains all of the necessary modules for a complete PLC system, including communications options, with up to 6 slots for I/O modules in the rack. All of the system interface modules required when adding I/O racks to contain up to the maximum of 32 K of I/O (16K Inputs and I6K Outputs) are described. A description of the various available communications options is included.

Chapter 3. Installation Instructions. This chapter contains installation specifications and instructions required in order to configure, and rack, panel or wall mount and wire your Series Six Plus Programmable Logic Controller system.

Chapter 4. Expanded CPU Operation. This chapter describes the Expanded functions and Expanded mode of operation for the Series Six Plus Programmable Logic Controller. Included is a description of how to configure the Expanded functions on the Workmaster computer using Logicmaster 6 software. Also included in this chapter is information on how to use the Genius I/O diagnostics with the Expanded functions in a Series Six Plus Programmable Logic Controller.

Chapter 5. Troubleshooting and Repair. This chapter provides the basic information required to maintain your Series Six Plus Programmable Logic Controller system, including the CPU and I/O system. The troubleshooting method described emphasizes a logical approach to analyzing any faults and subsequent replacement of any failed modules.

Appendix A. Glossary of Terms. This is a glossary of commonly used programmable logic controller terminology to aid the user in understanding those unique terms.

A comprehensive index is provided as an aid to quickly finding a particular subject in this manual.

Shoufd additional information be required, contact your GE Fanuc-NA Distributor, GE Fanuc-NA salesperson or GE Fanuc Automation North America, Inc., P.O. Box 8106, Charlottesville, Virginia, 22906.

Henry A. Konat
Senior Technical Writer

Artisan Technology Group - Quality Instrumentation ... Guaranteed | (888) 88-SOURCE | www.artisantg.com

RELATED PUBLICATIONS

For more information on subjects discussed in this manual, refer to these publications:

GEK-25361 *Series Six Installation and Maintenance Manual,* which describes the earlier models of Series Six programmable logic Controllers.

GEK-25365 *Application Guide for the Series Six Programmable Controller,* which provides information on how to developement typical applications using a PLC.

GEK-25364 *Series Six Data Communications Manual,* which describes the function and operation of the Communications Control Modules (CCM).

GEK-25367 *Series Six Data Sheet Manual,* which contains technical descriptions, specifications, and wiring information on available modules.

GEK-25368 *Series Six Axis Positioning Module Type 1 Manual,* which describes installation, programming and application of the APM, Type 1.

GEK-25398 *Series Six ASCII/BASIC Module Manual,* which describes installation programming and troubleshooting procedures for the ABM.

GEK-25373 *WORKMASTER Guide to Operation,* which provides information for configuration and installation of the Workmaster computer.

GEK-25379 *Logicmaster 6 User's Manual,* which provides the information required to program and document a Series Six Plus PLC.

GEK-90486 *Genius I/O System User's Manual,* which provides configuration, programming, operation, and troubleshooting information to aid in implementing the Genius I/O system into a Series Six Plus PLC system.

GEK-90800 *Series Six Axis Positioning Module Type II User's Manual,* which describes installation, programming and application of the APM, Type 2.

GEK-90802 *ProLoop Process Controllers,* which contains the information required to use the family of ProLoop Process Controllers. Includes data on stand-alone operation and the Loop Management Module, which interfaces the process controllers to a Series Six Plus PLC system.

GEK-90817 *Series Six Operator interface Terminal User's Manual,* which describes the configuration, installation, programming, and operation of the OIT for use with a Series Six Plus PLC.

GEK-90820 *VuMaster Color Graphics Terminal,* which describes the installation, configuration, and operation of a color graphics system as an operator interface for data collection and analysis.

GEK-90825 *Series Six PC I/O link Local Module User's Manual,* which describes the link between a Series Six Plus PLC and the I/O structure for the Series One family and Series Three PLCs.

Artisan Technology Group - Quality Instrumentation ... Guaranteed | (888) 88-SOURCE | www.artisantg.com

The Series Six Plus Programmable Logic Controller and its associated modules have been tested and found to meet or exceed the requirements of FCC Rule, Part 15, Subpart J. The FCC requires that the following note be published.

NOTE

This equipment generates, uses, and can radiate radio frequency energy and if not installed and used in accordance with the instruction manual, may cause interference to radio communications. It has been tested and found to comply with the limits of a Class A computing device pursuant to Subpart J of Part 15 of FCC Rules, which are designed to provide reasonable protection against such interference when operated in a commercial environment. Operation of this equipment in a residential area is likely to cause interference, in which case the user at his or her own expense will be required to take whatever measures may be required to correct the interference.

Artisan Technology Group - Quality Instrumentation ... Guaranteed | (888) 88-SOURCE | www.artisantg.com

Artisan Technology Group - Quality Instrumentation ... Guaranteed | (888) 88-SOURCE | www.artisantg.com

CONTENTS

	TITLE	PAGE
CHAPTER f .	INTRODUCTION TO THE SERIES SIX PLUS PROGRAMMABLE LOGIC CONTROLLER	1 - 1
	What are Programmable Logic Controllers?	1 - 1
	Advantages of Programmable Logic Controllers	1 - 2
	Series Six Plus Programmable Logic Controller	1 - 2
	features of the Series Six Plus PLC	1 - 4
	General Specifications	1-5
	Genius I/O System	1 - 6
	Programming the Series Six Plus PLC	1-7
	Workmaster Industrial Computer	1 - 8
	Other Software Packages	1 - 8
	Programming Language for the Series Six Plus PLC	1 - 9
	Programmable Logic Controller Concepts	1-11
	Function of the Central Processor Unit	1-11
	Memory Types Used in the Series Six Plus PLC	1 - 1 1
	Function of the Input/Output Circuitry	1 - 1 2
	Optional Devices Supporting the Series Six Plus PLC	1-14
	Redundant Processor Unit	1-14
	Operator Interface Unit	1-15
	Operator Interface Terminal	1-15
	ProLoop Process Controllers	1-16
	ASCII/BASIC Module	1-17
	Axis Positioning Module	1 - 1 7
	Communications Control Modules	1-18
	GEnet Factory LAN	1-18
	Series Six PLC Network Interface	1 - 2 0
	Datagram Communications Service	1-20
	Global Data Service	1-21
	RS-232 to RS-422 Adaptor Unit	1-21
	System Planning	1-22
	Typical Applications Using PLCs	1 - 2 2
	PLC Terminology	1 - 2 3
	PLC Compatibility Guide	1 - 2 4
CHAPTER 2.	PHYSICAL EQUIPMENT CONFIGURATION	2 - 1
	Product Structure for the Series Six Plus PLC	2 - 1
	19 Inch CPU Rack Configuration	2 - 2
	13 Inch CPU Rack Configuration	2 - 2
	Basic Unit Configuration	2 - 2

Artisan Technology Group - Quality Instrumentation ... Guaranteed | (888) 88-SOURCE | www.artisantg.com

CONTENTS

TITLE	PAGE
CHAPTER 2. PHYSICAL EQUIPMENT CONFIGURATION (Continued)	
Power Supply for the Series Six Plus PLC	2-4
Terminal Block Connections	2-6
Power Supply Specifications	2-7
Outputs and System Control Signals	2-8
Power Supply Auxiliary Circuit Board	2-9
I/O Control Module	2-10
User Connections	2-10
Status Indicators	2-10
User Configurable Jumpers	2-11
Logic Control Module	2-12
Arithmetic Control Module	2-14
Status Indicators	2-14
Combined Memory Module	2-16
Logic Memory Function	2-16
Register Memory Function	2-16
Internal Memory Function	2-16
Detection of Active Override in System	2-17
Scratch Pad Items	2-17
Type of Memory Used	2-18
Battery Status Indicator	2-18
Location in Rack	2-19
Precautions When Handling Memory Modules	2-19
Memory Protection	2-19
Bus Controller Module	2-21
Versions of Bus Controller	2-21
Communications Control Modules	2-22
Communications Control Module, Type 2 (CCM2)	2-22
System Configuration	2-23
User Items	2-23
Communications Control Module, Type 3 (CCM3)	2-25
CCM2 Mode	2-25
CCM3 Remote Terminal Unit (RTU) Mode	2-25
Dual Mode Usage	2-25
I/O Communications Control Module (I/O CCM)	2-26
I/O Link Local Module	2-27
I/O Structure for the Series Six Plus PLC	2-29
I/O Racks	2-29

Artisan Technology Group - Quality Instrumentation ... Guaranteed | (888) 88-SOURCE | www.artisantg.com

CONTENTS

TITLE	PAGE
CHAPTER 2. PHYSICAL EQUIPMENT CONFIGURATION (Continued)	
I/O Addressing	2-31
Normal Mode I/O Addressing	2-33
Expanded Mode I/O Addressing	2-33
Channel Reference Numbering	2-33
Real I/O Memory Allocation	2-34
Internal Discrete Reference Memory Allocation	2-34
Expanded Mode **I/O** References	2-34
I/O System **Configuration**	2-36
I/O Rack Interconnections	2-36
CPU I/O Station	2-37
Local I/O Station	2-39
Remote I/O Station	2-40
I/O Interface Modules	2-42
I/O Receiver	2-43
I/O Chain Signal Continuation or Termination	2-44
Module Connections	2-44
Status Indicators	2-45
Advanced I/O Receiver	2-46
Module Connections	2-46
I/O Signal Continuation or Termination	2-47
Status and Diagnostic Indicators	2-48
I/O Transmitter	2-49
Isolation Circuitry	2-50
Location in Rack and I/O Channel Addressing	2-51
Status Indicators	2-51
Configuration Jumpers	2-51
Connector	2-51
Remote I/O System	2-52
System Connections	2-52
Remote System Response Time	2-53
Remote I/O Addressing	2-53
Printed Circuit Board Jumpers	2-54
Remote I/O Driver	2-55
Remote I/O Driver Addressing	2-56
Status Indicators	2-57
Option Jumpers	2-57
Remote I/O Receiver	2-58
Connectors	2-59
Status Indicators	2-59
Option Jumpers	2-59

Artisan Technology Group - Quality Instrumentation ... Guaranteed | (888) 88-SOURCE | www.artisantg.com

CONTENTS

	TITLE	PAGE
CHAPTER 2.	PHYSICAL EQUIPMENT CONFIGURATION (Continued)	
	Auxiliary I/O System	2-60
	Workmaster Computer to Series Six Plus PLC Connections	2-62
	Workmaster to Series Six Interface Adaptor Boards	2-62
	Connection to I/O Control or I/O Receiver Modules	2-62
	Connection to an I/O Transmitter Module	2-62
	Connecting Cable	2-63
	Connections Using the Serial Version of Logicmaster 6	2-64
	Using the Cimstar I Computer With a Series Six Plus PLC	2-64
	Parallel Version of Logicmaster 6 Software	2-64
	Serial Version of Logicmaster 6 Software	2-65
	Programming a Series Six Plus PLC With an IBM PC	2-65
CHAPTER 3.	INSTALLATION INSTRUCTIONS FOR THE SERIES SIX PLUS PROGRAMMABLE LOGIC CONTROLLER	3-1
	Introduction	3-1
	Quality Control	3-1
	Packaging	3-1
	Visual Inspection	3-2
	Preinstallation Check	3-2
	Rack Installation	3-2
	Extraction/Insertion Tool	3-4
	Inserting a Printed Circuit Board	3-5
	Removing a Printed Circuit Board	3-6
	Module Installation	3-6
	Combined Memory Module	3-8
	Battery Installation	3-8
	External Auxiliary Battery Select ion	3-9
	Arithmetic Control Module Logic Control Module – Advanced, Expanded or Expanded II	3-11
	I/O Control Module	3-12
	Auxiliary I/O Module	3-73
	Communication Control Modules	3-13
	CPU Power Supply	3-14

Artisan Technology Group - Quality Instrumentation ... Guaranteed | (888) 88-SOURCE | www.artisantg.com

CONTENTS

TITLE	PAGE
CHAPTER 3. INSTALLATION INSTRUCTIONS FOR THE SERIES SIX PLUS PROGRAMMABLE LOGIC CONTROLLER (Continued)	
System Grounding Procedures	3-15
Recommended Grounding Practices	3-15
Ground Conductors	3-16
Series Six Plus PLC Equipment Grounding	3-16
I/O System Configuration	3-19
I/O Power Supply	3-20
AC Power Source Connections	3-20
DC Power Source Connections	3-21
I/O System Interface Modules	3-21
I/O Receiver or Advanced I/O Receiver	3-22
I/O Transmitter	3-22
Remote I/O Driver	3-23
Remote I/O Receiver	3-24
Parallel I/O Chain Cables	3-24
Parallel I/O Cable Configuration	3-25
Serial Link Cable to Remote I/O System	3-26
I/O Point Selection	3-27
Power Supply Load Capacity	3-28
Load Capacity for a Series Six Plus CPU Rack	3-28
Load Capacity for an I/O Rack	3-30
Initial Start-up Instructions for a New Series Six CPU	3-31
Running Expanded I/O on the Series Six Plus PLC	3-34
As Internal Coils Only	3-34
To Be Solved to Real World I/O Points	3-34
How It Works	3-34
System Design Considerations	3-39
CHAPTER 4. EXPANDED CPU OPERATION	**4-1**
Introduction	4-1
Normal Mode of Operation	4-7
Expanded Functions	4-1
Series Six PLC I/O Diagnostics for Series Six Plus PLCs	4-2
I/O Transmitter Diagnostic Feature	4-2
Interrupt Module Location	4-2
Normal Mode I/O Addressing	4-3

Artisan Technology Group - Quality Instrumentation ... Guaranteed | (888) 88-SOURCE | www.artisantg.com

CONTENTS

TITLE	PAGE
CHAPTER 4. EXPANDED CPU OPERATION (Continued)	
Expanded Mode I/O Addressing	4-3
I/O Channels	4-3
Channel Reference Numbering	4-4
Real I/O Mapping	4-5
Internal Mapping of Discrete References	4-5
Register Memory Size	4-5
Expanded Mode I/O References	4-a
Summary of Required I/O References	4-9
Summary of Required Register References	4-9
Dynamic User Memory Checksum	4-11
Memory Checksum Calculation	4-11
Logicmaster 6 Display of Checksum Error	4-11
Restarting a CPU Stopped by a Checksum Error	4-11
Configuration of Expanded Functions Through Logicmaster 6 Software	4-12
Expanded Functions Menu	4-12
CPU Configuration Set Up Menu	4-13
Making Entries on the CPU Configuration Set Up Page	4-14
Cancelling Entries to the CPU Configuration Set Up Menu	4-14
CPU Configuration Menu: Definitions	4-14
Displaying and Editing the Genius Bus Controller Locations Page	4-17
Editing the Bus Controller Map	4-17
Cancelling Changes to the Bus Controller Map	4-17
Displaying and Clearing Genius I/O Faults	4-18
Displaying the Genius I/O Fault Table	4-18
Genius I/O Fault Table Definitions	4-19
Viewing Additional Fault Listings	4-20
Clearing Faults	4-20
Floating Point Functions	4-21
Floating Point Display Format	4-21
Valid Number Format	4-21
Programming Floating Point Arithmetic Functions	4-22
Floating Point Addition	4-22
Floating Point Subtraction	4-22
Floating Point Multiplication	4-23
Floating Point Division	4-23
Floating Point Greater Than	4-24
Convert Integer to Floating Point	4-24
Convert Floating Point to Integer	4-24

Artisan Technology Group - Quality Instrumentation ... Guaranteed | (888) 88-SOURCE | www.artisantg.com

CONTENTS

	TITLE	PAGE
CHAPTER 4.	EXPANDED CPU OPERATION (Continued)	
	Window (DPREQ) Function	4-24
	Entering a Window Function	4-25
	Using the Do I/O Function to Address 16K Inputs and Outputs	4-26
	Entering a Do I/O Function	4-26
	Expanded Time Reference (Real-Time Clock)	4-27
	Format of the Real-Time Clock	4-27
	Genius I/O Diagnostics	4-28
	Diagnostic Fault Table	4-28
	Register Memory Size VS Genius I/O Diagnostics	4-28
	Fault Table Pointer	4-28
	Input Data From Bus Controller	4-28
	Selecting Addresses for Diagnostic Data Storage	4-29
	Bus Controller Status Byte 2 (Address 0),- Input 1	4-29
	Bus Controller Status Byte 1 (Address 0) - Input 2	4-30
	Bus Controller Status Byte 1 (Address 0) - Inputs 3, 4, 5, 6)	4-30
	Bus Controller Status Byte 1 (Address 0) - Input 3	4-31
	Bus Controller Status Byte 1 (Address 0) - Input 4	4-32
	Bus Controller Status Byte 1 (Address 0) - Input 5	4-32
	Bus Controller Status Byte 1 (Address 0) - Input 6	4-32
	Bus Controller Status Byte 1 (Address 0) - Input 7 & 8	4-32
	Fault Table Registers	4-33
	Register 1 - Genius I/O Bus Controller Address Decoding	4-33
	Register 2	4-33
	Register 3	4-34
	Register 4 and 5	4-34
	Register 5 (Upper Byte) and Register 6	4-35
	Register 7	4-35
	Registers 8, 9, 10	4-36
	Bus Controller Output Data	4-36
	Output 1 (Bit 0) Definition, Disabled Outputs	4-36
	Output 2 (Bit 1) Definition, Clear All Faults	4-37
	Output 3 (Bit 2) Definition, Clear Circuit Fault	4-37
	Output 4 (Bit 3) Definition, Pulse Test	4-37
	Output 9 (Bit 0 of Byte 2) Definition, Circuit Type	4-38

Artisan Technology Group - Quality Instrumentation ... Guaranteed | (888) 88-SOURCE | www.artisantg.com

CONTENTS

TITLE	PAGE
CHAPTER 4. EXPANDED CPU OPERATION (Continued)	
Point Status Bit Map	4-38
Bus Status/Control Byte Location	4-39
Input Status Definitions	4-39
Output Control Definitions	4-40
Computer Mail Box	4-40
Using the Computer Mail Box to Communicate With Genius I/O Bus Controllers	4-40
Operation of the Computer Mail Box	4-41
Communication Window Opens	4-41
Register R – Bus Controller Address	4-41
Command Data Registers	4-42
Register R+1 – Operation (Read or Write)	4-42
Register R+2 – Communications Status	4-42
Register R+3 – Target Block Start Address	4-43
Register R+4 – Mailbox Address for Data	4-43
Register R+5 – Data Buffer Length	4-43
Data Registers	4-43
Command Verification	4-43
Terminating Computer Mail Box Communication	4-44
Using the DPREQ Function to Communicate With Genius I/O	4-44
Typical DPREQ Operation	4-44
Contents of First Register	4-4s
Contents of Second Register	4-45
Contents of Third Register	4-45
Contents of Fourth Register	4-46
Contents of Fifth Register	4-46
CHAPTER 5. TROUBLESHOOTING AND REPAIR	5-1
Introduction	5-1
Minimum Downtime	5-1
Logical Troubleshooting	5-1
Troubleshooting	5-2
Replacement Module Concept	5-2
Isolate the Problem	5-2

Artisan Technology Group - Quality Instrumentation ... Guaranteed | (888) 88-SOURCE | www.artisantg.com

CONTENTS

	TITLE	PAGE
CHAPTER 5.	TROUBLESHOOTING AND REPAIR (Continued)	
Section 1	Central Processing Unit Troubleshooting	5-3
	Fault Isolation and Repair	5-3
	Check Condition of Status Indicator Lights	5-3
	Check Position of Key Switches	5-3
	Battery Light Out	5-16
	Alarm Relay	5-18
Section 2.	I/O System Troubleshooting	5-20
	Troubleshooting the I/O Rack Power Supply	5-20
	I/O Indicator Chart	5-22
	I/O Rack Connections	5-27
	Suggested Troubleshooting Sequences	5-31
	Examples of Intermittent Fault Conditions & Causes	5-36
	Troubleshooting with the Advanced I/O Receiver Module	5-38
	Example of Determining the Output Byte Address	5-41

APPENDIX

APPENDIX A.	GLOSSARY OF TERMS	A-1

Artisan Technology Group - Quality Instrumentation ... Guaranteed | (888) 88-SOURCE | www.artisantg.com

FIGURES

		PAGE
Figure 1.1	Programmable Logic Controller Block Diagram	1-1
1.2	Typical Series Six Plus PLC Rack	1-3
1.3	Genius I/O Typical Communications Link	1-6
1.4	Workmaster Industrial Computer	1-7
1.5	Redundant Processor Unit Configuration	1-14
1.6	Operator Interface Unit	1-15
1.7	Operator Interface Terminal	1-15
1.8	Typical Proloop System Equipment	1-16
1.9	GEnet Factory LAN	1-19
1.10	LAN Interface Module Connects a Series Six Plus PLC to a Carrierband Network	1-20
1.11	RS-232 to RS-422 Adaptor Unit	1-21
2.1	Product Structure for Series Six Plus PLC	2-1
2.2	Basic CPU Rack Configuration for the Series Six Plus	2-3
2.3	Brackets in Position for Rack Mounting	2-3
2.4	Brackets in Posit ion for Wall or Panel Mounting	2-3
2.5	Illustration of Power Supplies	2-4
2.6	CPU Terminal Block Connections	2-6
2.7	CPU Power Supply Block Diagram	2-8
2.8	Power Supply Auxiliary Circuit Board	2-9
2.9	I/O Control Module	2-11
2.10	Example of Logic Control Module	2-13
2.11	Arithmetic Control Module	2-15
2.12	Basic Word Structure	2-16
2.13	Typical Combined (Logic) Memory Module	2-20
2.14	Illustration of CCM2 Module	2-24
2.15	Illustration of I/O CCM Module	2-26
2.16	I/O Link Local Module to Series One or Series Three Remote I/O Racks	2-27
2.17	I/O Link Local Module	2-28
2.18	Typical I/O Rack	2-29
2.19	I/O Point Address Switches	2-31
2.20	Dip Switch Settings for 8-Circuit Modules	2-32
2.21	CPU I/O Station	2-38
2.22	Local I/O Station	2-39
2.23	Remote I/O Station Configuration	2-41
2.24	I/O Receiver User Items	2-43
2.25	I/O Receiver Dip Shunt/Jumper Rack Configuration	2-44
2.26	Location of User Items	2-47
2.27	I/O Transmitter Module	2-50
2.28	Typical Remote I/O System Connections	2-52
2.29	Remote I/O Driver Module	2-55
2.30	Remote I/O Receiver Module	2-58

Artisan Technology Group - Quality Instrumentation ... Guaranteed | (888) 88-SOURCE | www.artisantg.com

FIGURES

		PAGE
Figure 2.31	Auxiliary I/O Module Board Layout	2-61
2.32	Workmaster Computer Connections to the Series Six Plus PLC	2-63
3.1	Rack Mounting (19" Rack)	3-3
3.2	Wall or Panel Mounting (19" Rack)	3-3
3.3	Extraction/Insertion Tool	3-4
3.4	Position of Extraction/insertion Tool for Board Insertion	3-5
3.5	Positioning the Extraction/Insertion Tool for Board Removal	3-6
3.6	CPU Module Location Guide	3-7
3.7	Memory Board Battery Connect ion	3-9
3.8	Printed-Circuit Board Orientation in a Rack	3-10
3.9	Logic Control to Arithmetic Control Ribbon Cable	3-11
3.10	I/O Control Module Jumper Location	3-12
3.11	CPU Power Supply Connections	3-14
3.12	PLC System Grounding	3-16
3.13	Rack Safety Ground Wiring	3-16
3.14	Series Six Plus PLC Rack Signal Ground Connections	3-17
3.15	I/O Station Grounding	3-18
3.16	Programming Device Ground Connection	3-18
3.17	Typical I/O Rack	3-19
3.18	I/O Power Supply Connect ions	3-20
3.19	Parallel I/O Chain Cable	3-25
3.20	Remote I/O Twisted Pair Cable	3-26
3.21	Remote I/O Cable for RS-232 Modems	3-26
3.22	Dip Switch Settings for I/O Point Selection for 8 Circuit Modules	3-27
3.23	Example 1 - Correct Configuration	3-35
3.24	Example 2 - Correct Configuration	3-36
3.25	Example 3 - Incorrect Configuration	3-37
3.26	Example 4 - Incorrect Configuration	3-38
4.1	I/O Transmitter Dip Switch Settings for Expanded I/O Channel Selection	4-4
4.2	Expanded I/O Reference Format	4-4
4.3	Memory Map for 8K and 16K Registers	4-6
4.4	Memory Map for 1K Registers	4-7
4.5	Floating Point Arithmetic Display Format	4-21
4.6	Bus Controller Input Status Reference Definition	4-31
4.7	Fault Table Registers	4-29
4.8	Bus Controller Output Status Reference Definition	4-36
4.9	Register Format for Computer Mail Box	4-40
5.1	Series Six Plus CPU Indicators and Switches	5-5
5.2	Power Supply Output Voltage Terminals (TB1)	5-7
5.3	CPU Power Supply Block Diagram	5-8

Artisan Technology Group - Quality Instrumentation ... Guaranteed | (888) 88-SOURCE | www.artisantg.com

FIGURES

		PAGE
Figure 5.4	Battery Mounting Clips and Connectors	5-17
5.5	CPU Power Supply Terminal Board	5-18
5.6	Input Voltage Terminal Board	5-21
5.7	Output Voltage Terminal Board for Standard Power Supply	5-21
5.8	Output Voltage Terminal Board for High Capacity Power Supply	5-21
5.9	CPU to I/O Rack Configuration	5-28
5.10	I/O Rack to I/O Rack Configuration	5-29
5.11	Typical I/O Rack Wiring Scheme	5-30
5.12	Advanced I/O Receiver Status Indicators	5-38

TABLES

Table 1 .1	Series Six Plus PLC Features	1 - 4
1.2	General Specifications	1 - 5
1.3	Programming Functiona Groups	1 - 9
1.4	Standard I/O Modules	1-12
1.5	Genius I/O Blocks	1-13
1.6	Other Modules	1-13
1.7	Typical PLC Applications	1-22
1.8	Common PLC Terminology	1-23
1.9	Compatibility Guide Series Six Plus PLC vs Series Six PLCs	1-24
2.1	Power Supply User Items	2-5
2.2	Conditions Causing Alarms	2-7
2.3	Power Supply Specifications	2-7
2.4	I/O Control Module Indicators	2-10
2.5	Arithmetic Control Module Status Indicators	2-14
2.6	Combined Memory Modules	2-16
2.7	Scratch Pad Storage Items	2-17
2.8	Combined Memory Module Status Indicators	2-18
2.9	CCM2 Status Indicator Definitions	2-23
2.10	I/O Rack and Power Supply Specifications	2-30
2.11	I/O Point References and Register Mapping for Expanded Mode Operation	2-35
2.12	I/O Interf ace Modules	2-42
2.13	I/O Receiver Status Indicators	2-45
2.14	Status and Diagnostic Indicator Definitions	2-48
2.15	I/O Transmitter Status Indicator Definitions	2-51
2.16	Typical System Response Times to Remote I/O	2-53
2.17	I/O Point Ranges in Remote I/O Stations	2-54
2.18	Remote I/O Driver Status Byte	2-56
2.19	Remote I/O Driver Status Indicators	2-57

Artisan Technology Group - Quality Instrumentation ... Guaranteed | (888) 88-SOURCE | www.artisantg.com

TABLES

			PAGE
Table	2.20	Remote I/O Driver Option Settings	2-57
	2.21	Remote I/O Receiver Status indicator Definitions	2-59
	2.22	Remote I/O Receiver Options	2-60
	3.1	Combined Memory Modules	3-8
	3.2	I/O Control Option Jumpers	3-12
	3.3	Expanded I/O Channel Selection	3-22
	3.4	Parallel I/O Chain Cable Catalog Numbers	3-24
	3.5	CPU Rack Power Supply Capacities	3-28
	3.6	Summary of Units of Load for CPU Rack Modules	3-29
	3.7	Summary of Units of Load for I/O Modules	3-30
	4.1	Memory Map for Expanded Mode I/O References	4-8
	4.2	Reserved I/O References	4-9
	4.3	Reserved Register References	4-10
	4.4	Bus Controller Addresses for Diagnostic Storage	4-29
	4.5	Decoding of Byte 6 for Circuit Fault Types	4-31
	4.6	Fault Types in Register 6	4-35
	4.7	Analog I/O Block Reference Example	4-37
	4.0	Bit Status Meaning for Analog Blocks	4-38
	4.9	Bus Controller Status/Control Byte Definition	4-39
	5.1	CPU Indicator Chart	5-4
	5.2	Conditions Causing Alarm Relays to Switch	5-19
	5.3	I/O Power Supplies	5-20
	5.4	I/O Module Status indicator Definitions	5-22

Artisan Technology Group - Quality Instrumentation ... Guaranteed | (888) 88-SOURCE | www.artisantg.com

CHAPTER 1
INTRODUCTION TO THE SERIES SIX* PLUS PROGRAMMABLE LOGIC CONTROLLER

The Series Six Plus Programmable Logic Controller is an enhanced version of the Series Six* family of programmable logic controllers. The Series Six family of programmable logic controllers was first introduced in 1980 and is used extensively in factory automation. Series Six Plus Programmable Logic Controllers are used worldwide in an ever growing variety of applications.

Programmable Logic Controllers (PLCs) are also referred to as Programmable Controllers (PCs). In this manual, in order to avoid any confusion, we will refer to these electronic control devices as programmable logic controllers or PLCs, since the use of the acronym PC is universally used when referring to Personal Computers.

WHAT ARE PROGRAMMABLE LOGIC CONTROLLERS?

Programmable logic controllers are general purpose microprocessor controls, that have been designed specifically for operation in the harsh environment usually encountered in the factory. A programmable logic controller accepts data from input devices, such as limit switches, proximity switches, and sensors. It then performs logical decisions in an orderly and repetitive sequence as determined by a program entered in memory by the user, and provides output control for machines or processes.

Input modules convert electrical signals provided by the input devices to logic levels for processing by the Central Processing Unit (CPU) and Output modules convert signals from the CPU to the proper electrical signals for control of machines or processes. The Input and Output (I/O) modules also provide electrical isolation, for signals in the CPU, from electrical noise typically found in the factory environment. Figure 1.1 is a basic block diagram of a programmable logic controller.

a42063

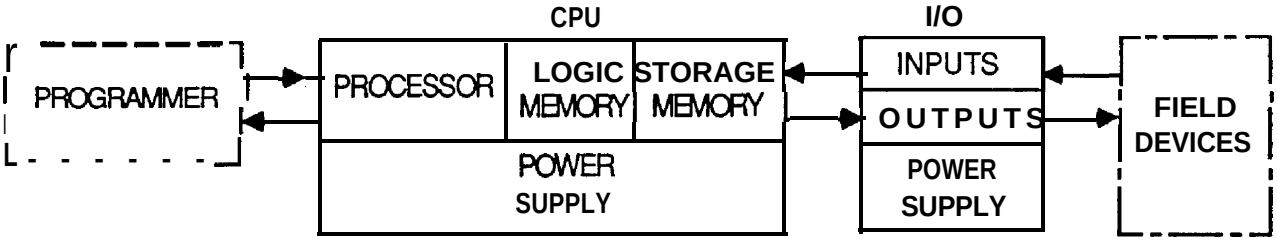

Figure 1 .1 PROGRAMMABLE LOGIC CONTROLLER BLOCK DIAGRAM

Artisan Technology Group - Quality Instrumentation ... Guaranteed | (888) 88-SOURCE | www.artisantg.com

ADVANTAGES OF PROGRAMMABLE LOGIC CONTROLLERS

Programmable Logic Controllers offer many advantages over other control devices, such as electrical timers and counters, relays, and drum type mechanical controllers. Some of the many advantages to be considered when planning a system include:

- Improved reliability, you do not need to be concerned with frequent breakdown of electro-mechanical devices.
- Less space required, since a proliferation of relays, electrical timers, etc., are not needed
- Easier to maintain. Built-in diagnostics and reliable solid-state devices equate to few breakdowns. When failures do occur, they are quickly detected and repaired. In fact, the revolutionary Genius* I/O system with its enhanced diagnostics, when used in the I/O structure, reduces failure detection and repair time to an absolute minimum.
- Easily reprogrammed if control requirements change.
- Flexibility – one device is able to perform many functions.

SERIES SIX PLUS PROGRAMMABLE LOGIC CONTROLLER

The Series Six Plus PLC is an extension of the Series Six family of Programmable Logic Controllers; previously available models 60, 600 and 6000. The Series Six Plus PLC is available as a single 19" or 13" rack, (referred to as the CPU rack) that can be configured to meet the application requirements. Memory is available on a combined memory board that contains the internal memory, up to 64K of logic memory and up to 16K of register memory. Up to 16K of I/O points (16K Inputs/l6K Outputs) are available to the user in a system.

All of the existing Series Six I/O modules are compatible with and can be used in a Series Six Plus PLC system. The 6 left slots in the 19" CPU rack are available for I/O modules (3 slots available for I/O in a 13" rack). If the PLC system is to include an Auxiliary I/O module, which must be placed in slot 6 or 7 (numbered from the right), 5 slots are available for l/O modules in the 19" CPU rack, or 2 slots in the 13" CPU rack.

When more than the 3 (13" rack) or 6 (19" rack) I/O modules that can be contained in the CPU rack are required, standard Series Six I/O racks are available to add to the l/O system. I/O racks connected directly to the CPU through the I/O Control module can be located up to 50 feet (15 meters) from the CPU in a daisy chain in a CPU station. I/O racks in a Local I/O station can be located up to 500 feet (150 meters) from the CPU, connected by I/O Transmitters to I/O Receivers or Advanced I/O Receivers, through cables on the parallel I/O bus. Up to 4 I/O Transmitters can be used in series to allow up to 2400 feet (600 meters) from the CPU station to the most distant I/O Receiver.

In addition, the I/O racks in a Remote I/O station can be located up to 10,000 feet (3 km) from a CPU or Local I/O station, when connected by a serial link through a 2-pair twisted cable. For virtually unlimited distances between I/O racks or the CPU and I/O racks, connection can be made through a serial communications link using RS-232 compatible modems.

Artisan Technology Group - Quality Instrumentation ... Guaranteed | (888) 88-SOURCE | www.artisantg.com

Figure 1.2 is an illustration of a Series Six Plus Programmable Logic Controller showing the location of modules in the CPU rack. I/O and CPU racks are available as either 13" or 19" racks.

a4i!069

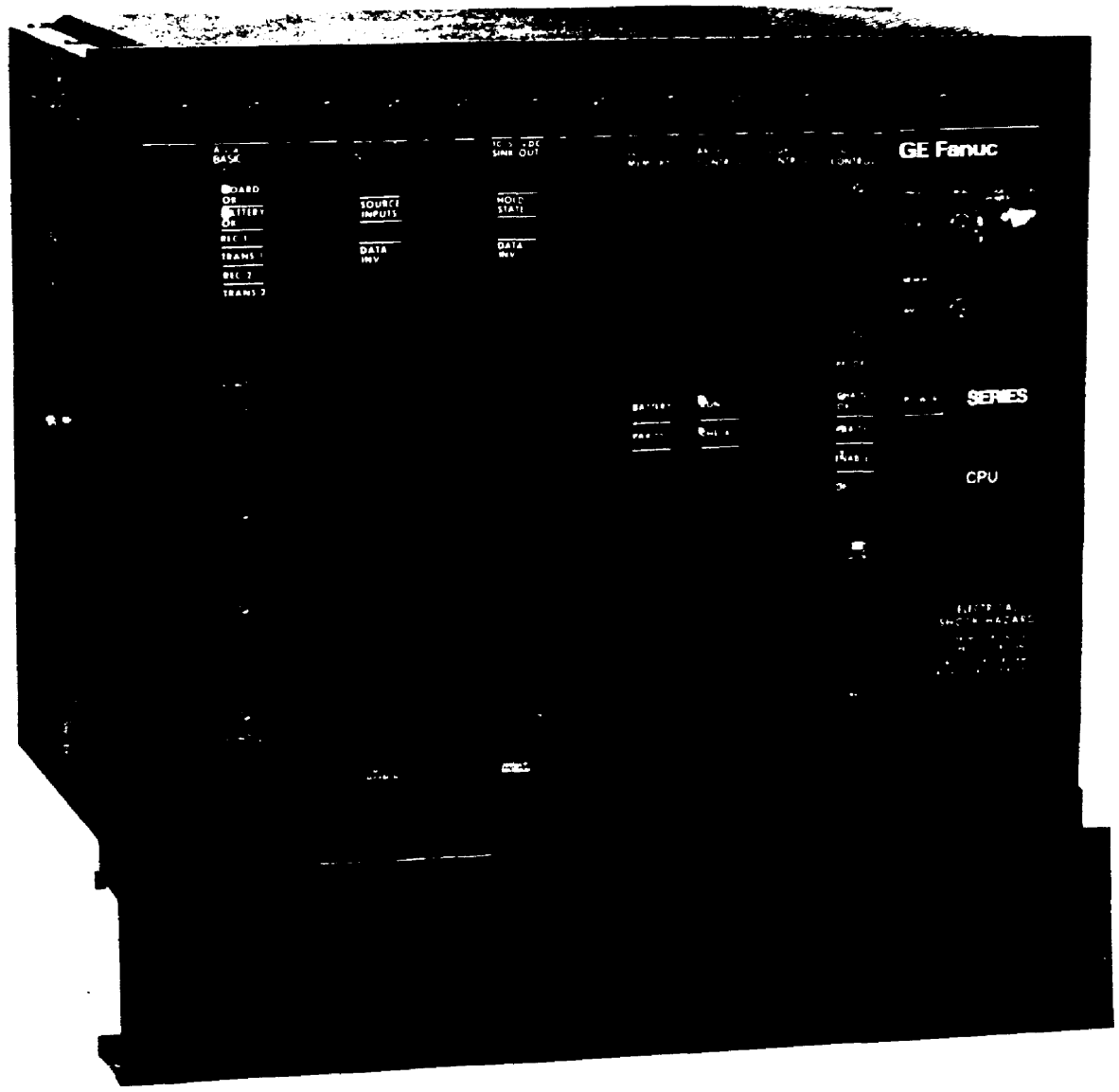

Figure 1.2 TYPICAL SERIES SIX PLUS PLC RACK

Artisan Technology Group - Quality Instrumentation ... Guaranteed | (888) 88-SOURCE | www.artisantg.com

General Specifications

General specifications for the Series Six Plus PLC are listed below.

Table 1.2 GENERAL SPECIFICATIONS

Operating Temperature	0 to 60°C (32 to 140°F) (at outside of rack)
Storage Temperature	-20 to 70°C (-4 to 158°F)
Humidity (Non-Condensing)	5% to 95%
AC Power Source	95 to 260 V ac
Frequency	47 to 63 Hz
Maximum Load	250 VA
DC Power Source	20 to 32 V dc (24 V dc Supply) Or 100 to 150 V dc (125 DC Supply)
Maximum Load	180 VA
Rack Weight, 19" (Filled)	37 lbs. (17 kg>
Rack Dimensions (19", 11 slots)	
Rack Mount	19.0(W) x 14.0(H) x 10.3(D) inches 483 x 356 x 261 millimeters
Panel Mount	20.0(W) x 14.0(H) x 10.3(D) inches 508 x 356 x 261 millimeters
Rack Dimensions (13", 8 slots)	
Rack Mount	**16.0(W)** x **13.25(H) x 9.3(D)** inches 406 x 337 x 236 millimeters
Rack Mount with Brackets for standard 19" Rack	19.0(W) x 13.25(H) x 9.3(D) inches 483 x 337 x 236 millimeters
Panel Mount (Brackets on sides)	16.0(W) x 13.25(H) x 9.3(D) inches
Panel Mount (Brackets on Top and Bottom, Side by Side Mount)	13.25(W) x 16.15(H) x 9.3(D) inches 337 x 410 x 236 millimeters
Typical Battery Life, Loaded 1	about 1 year
Battery Shelf life, No Load 1	8 to 10 years
Typical Scan Rate (Relay Functions)	.8 mSec per K of user memory
Maximum Number of I/O Points	Normal Mode 2 2K Inputs 2K Outputs
	Expanded Mode * 16K Inputs 16K Outputs

1. Depending Upon Temperature
2. Mode selected by enabling desired mode on the CPU Configuration Set Up Menu on a Workmaster computer, using Logicmaster 6 software, Version 3.01 or greater.

Artisan Technology Group - Quality Instrumentation ... Guaranteed | (888) 88-SOURCE | www.artisantg.com

GENIUS I/O SYSTEM

In addition to the standard rack-based I/O modules, the Series Six Plus PLC fully supports the Genius I/O system. This revolutionary I/O system is a major improvement over existing I/O systems. It can be mixed with the rack-based I/O or can comprise the total I/O system. The Genius I/O is available in units called blocks, and includes both discrete and analog blocks.

Genius I/O blocks are connected to the Series Six Plus CPU through a Bus Controller by a single twisted-pair communications link. The total number of Bus Controllers in a system is limited only by the I/O capacity of the Series Six Plus PLC. Each Bus Controller can have up to 30 blocks connected to it in a daisy chain, thereby providing up to 480 addressable I/O points on each bus.

For detailed information on the Genius I/O system, refer to GEK-90486, the Genius I/O System User's Manual. Some of the many benefits of the Genius I/O system are as follows:

- Each block is a stand-alone unit, no separate rack or power supply required.
- Each discrete block can be configured to be inputs, outputs, or any combination of inputs and outputs.
- Extensive diagnostics monitor not only the blocks, but also field devices.
- There are no fuses to be concerned with, since the discrete outputs have built-in electronic fusing for circuit protection.
- A convenient, easy to use Hand Held monitor is used for system configuration, calibration and troubleshooting.
- Easier installation and troubleshooting, and fewer spare parts required in inventory provide a signif icant cost savings over traditional I/O systems.

a41057

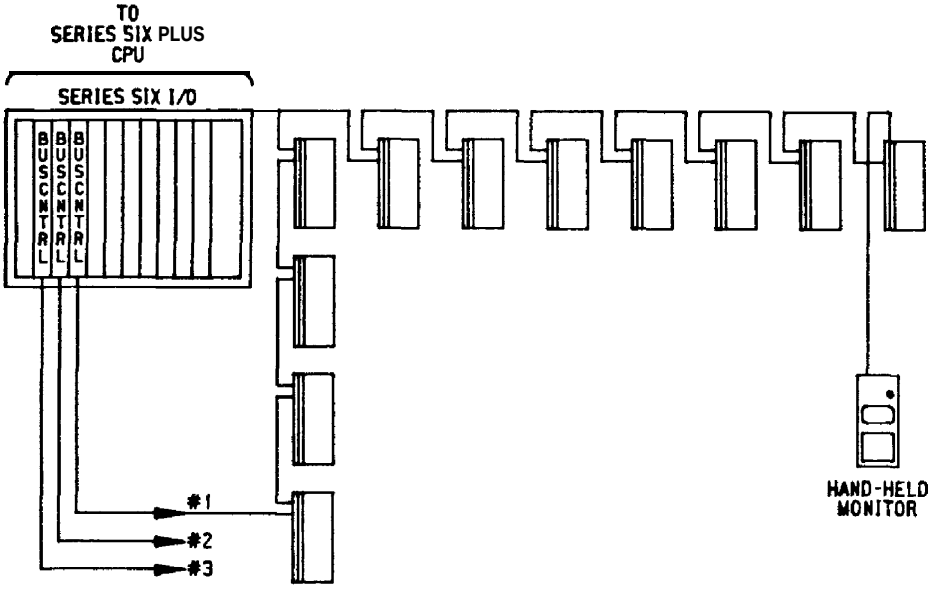

figure 1.3 GENIUS I/O TYPICAL COMMUNICATIONS LINK

Artisan Technology Group - Quality Instrumentation ... Guaranteed | (888) 88-SOURCE | www.artisantg.com

PROGRAMMING THE SERIES SIX PLUS PLC

Programs are entered, edited, and monitored using the Workmaster* industrial computer or the CIMSTAR I industrial computer. Programming the Series Six Plus with Expanded II functions requires version 4.01 or later of the Logicmaster* 6 software. Prior versions of Logicmaster 6 may be used to program the Expanded II instruction set provided that no Auxiliary I/O references are used (no Auxiliary I/O chain) and no Expanded II features are required. An IBM* PC, PC-XT or PC-AT personal computer can also be used with unbundled software. For detailed information on programming the Series Six Plus PLC, refer to the Logicmaster 6 Programming and Documentation Software User's Manual, GEK-25379.

a40532

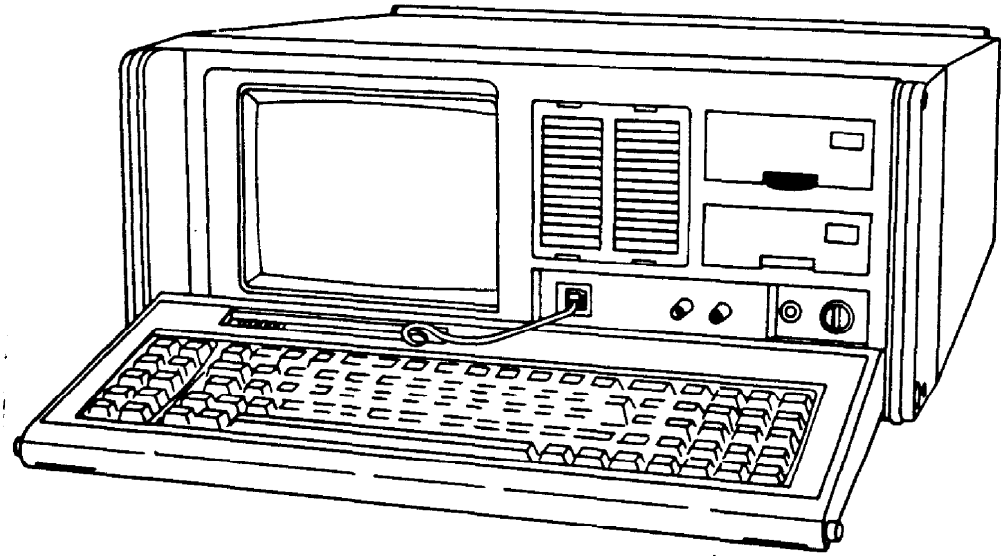

Figure 1.4 WORKMASTER INDUSTRIAL COMPUTER

*IBM is a registered trademark of International Business Machines Incorporated

Artisan Technology Group - Quality Instrumentation ... Guaranteed | (888) 88-SOURCE | www.artisantg.com

Workmaster Industrial Computer

The Workmaster industrial computer, with Logicmaster 6 software, is the main device used for developing and entering new user's programs, editing existing programs, or real-time system monitoring of the PLC. The Workmaster computer is built around a portable, industrial hardened, IBM* compatible personal computer. It can be configured to have either one or two diskette drives or one or two diskette drives and a 20 megabyte fixed hard disk.

The diskette drives are 3.5" drives. The capacity of each diskette is 720 K bytes (double sided, double density) after formatting. The small physical size of the diskettes makes them convenient to handle and store. Once your program has been developed on the Workmaster computer and stored on a diskette, it is retained for future use even through power fail conditions.

Other Software Packages

In addition to program development and entry for the Series Six Plus PLC, many other software packages can be run on the Workmaster computer by adding the required software and hardware options. Some of these are Processmaster, which is used to configure and monitor ProLoop Process Controllers; Modelmaster Factory Modeling System, which is a graphically enhanced flexible modeling system used to simulate factory manufacturing facilities; Vumaster, an intelligent color graphics operator interface; Motionmaster, which provides a powerful tool for the development and maintenance of motion control software in conjunction with the Axis Positioning (APM1 and APM2) Modules; Alarm Master, which is used to create fault and alarm monitoring programs, and Logicmaster 1 and 3 software, which is used for developing and entering programs on the Series One family or Series Three PLCs. In addition, there are a number of Vendor Logo software packages available for use with a Series Six Plus PLC system. For information on other programs that can be run on the Workmaster computer, contact your local GE Fanuc – NA sales off ice or GE Fanuc Automation North America, Inc., Charlottesville, Va.

Artisan Technology Group - Quality Instrumentation ... Guaranteed | (888) 88-SOURCE | www.artisantg.com

Programming Language for the Series Six Plus PLC

The basic programming language used by the Series Six Plus PLC is relay ladder logic. This has been expanded to include instructions for applications more complex than those requiring only the basic relay ladder logic functions. Three versions of programming instruction sets are available, Advanced, Expanded, and Expanded II. The instruction sets are contained in PROMS on the appropriate Logic Control module. The version of the module must be selected, depending on the programming (instruction set) requirements (Advanced Functions, Expanded Functions, or Expanded II Functions.

The Expanded functions include a group of 7 instructions that provide the capability for floating point math calculations to be performed. Several other functions are enhanced to expand their capabilities to allow their use with the full 32K of I/O and 16K of user accessible 16-bit data registers and permit the use of the powerful Genius I/O diagnostics. The Expanded II functions include all of the functions available with the Expanded functions. Additionally, instructions are included for accessing a new I/O system to be available in the future, and changes in the microcode have been made to allow operation which provides faster execution of ladder logic programs. Available programming functions are listed below.

Table 1.3 PROGRAMMING FUNCTIONAL GROUPS

	ADVANCED FUNCTIONS
RELAY	Normally Open and Normally Closed Contacts "Real World" Output Coils Internal Coils Latches One-shots **Timing** (Ø.Ø1, Ø.1, and 1.Ø Second Increments) Counting (up and down) Auxiliary I/O References
ARITHMETIC	Addition, Subtraction, Compare } Unsigned Binary Shift Double Precision Addition, Subtraction, Multiply, Divide } Signed 2's Complement Greater Than
CONTROL	Master Control Relay and Skip Do Subroutine, Do I/O Suspend I/O, Return, Status
MOVE/CONVERT	Data Moves I/O Table to Register Register to I/O Table Table To Destination Source To Table, Move Table, Move Table Extended Move Right 8 Bits, Move Left 8 Bits Block Move, Move A To B Convert Binary to BCD, BCD to Binary

Artisan Technology Group - Quality Instrumentation ... Guaranteed | (888) 88-SOURCE | www.artisantg.com

Table 1.3 PROGRAMMING FUNCTIONAL GROUPS(Continued)

ADVANCED FUNCTIONS (Cont.1	
COMM. REQUESTS	DPREQ and SCREQ
MATRIX	AND Inclusive & Exclusive OR Invert Masked Compare Set/Sense Clear/Sense Bit Shift Right Shift Left
LIST	Add to Top Remove from Bottom Remove from Top Sort
MISCELLANEOUS	End of Sweep, NO OP
EXPANDED FUNCTIONS	
RELAY	All Advanced Functions plus: Valid Reference Range Expanded for Full 32K I/O Points; an additional 68K of discrete references and 16K Registers
ARITHMETIC	All Advanced Functions plus: Floating Point Functions Add, Subtract, Multiply, Divide Greater Than Integer to Floating Point Floating Point to Integer
CONTROL	All Advanced Functions plus: Do I/O enhanced and Status enhanced
COMM. REQUESTS	SCREQ - Same as Advanced DPREQ Enhanced
MOVE/CONVERT	All Advanced Functions
MATRIX, LIST	All Advanced Functions
Miscellaneous	All Advanced Functions
EXPANDED II FUNCTIONS	
All Advanced and Expanded Functions plus: -Changes in system microcode which provides faster execution of ladder logic. -Dynamic user program memory checksum calculation. -Detection of active overrides in system. - Instructions added to allow accessing a future I/O system. -Support of 64K User Logic memory. -Auxiliary I/O overrides.	

Artisan Technology Group - Quality Instrumentation ... Guaranteed | (888) 88-SOURCE | www.artisantg.com

PROGRAMMABLE LOGIC CONTROLLER CONCEPTS

When using a new product for the first time, there are always new concepts and terms to become familiar with. Although PLCs are easy to install, program, and apply, there are some simple principles to follow. The following paragraphs describe the components of a Programmable Logic Controller.

Function of the Central Processor Unit

The Central Processor Unit (CPU) is basically a microprocessor containing the circuitry that performs logical decision making functions. It reads in the status of the control system, makes decisions based upon the logic that has been programmed, and then provides decisions to the actuating portion of the control system.

The CPU also performs self checking of its internal operation to ensure reliable operation. This is done by a circuit called the watchdog timer. The watchdog timer is a hardware timer set at 300 ms +/-50 ms to ensure that memory or internal circuit faults do not cause the CPU to enter an endless loop because of hardware failure. If a scan is not completed at least once every 300 ms +/-50 ms, the hardware will shut the CPU down and turn the outputs OFF. If an error is detected, it will shut itself down. The logic entered by the programmer is actually stored in the CPU along with data storage and storage for the operation of timers and counters.

Memory Types Used in the Series Six Plus PLC

All memory for the Series Six Plus PLC is located on one module, which is the Combined Memory Module. This module contains all internal, register, and logic (user) memory. The memory provided for these storage functions is normally measured in K words, where K is an abbreviation for kilo or 1024. Typically, one word is required for storage of each function such as a relay contact, timer preset or timer storage. These words can be of various lengths such as 16 bits, 8 bits, or even 4 bits, with a bit being the lowest level of measurement and can have only two states (on or off). The Series Six Plus uses the most common measurement, 16 bits per word. The number of words required per function will vary, however, with the more complex functions requiring up to 6 words each.

The most common type of memory used in PLCs to store both logic and data is CMOS. CMOS is an acronym commonly used for CMOS RAM (Complimentary Metal-Oxide Semiconductor, Random Access Memory). CMOS is a fast, low power memory that can be easily examined (read) and changed (written). However, it is volatile, in that it can lose its content if power is removed.

To avoid reloading memory (and losing counts and system status) every time power is turned off, the CMOS memory is provided with a Lithium-Manganese Dioxide battery to maintain its content (not system operation) when power fails. Due to the low power drain of CMOS technology, a single new lithium battery can maintain memory without application of power for up to 1 year. The battery is not used when power is applied and the system is operating normally. Its storage or shelf life is typically 8 to 10 years.

A dynamic user program memory checksum is available when the Expanded II Logic Control module option is selected. The user program checksum feature provides more data integrity within the user program. It traps certain types of errors not caught by memory parity checking.

Artisan Technology Group - Quality Instrumentation ... Guaranteed | (888) 88-SOURCE | www.artisantg.com

Function of the Input/Output Circuitry

The final element of a PLC is the Input/Output section. Electrical noise such as spikes on the power lines, inductive kickback from loads, or interference picked up from field wiring is very prevalent in industrial applications. Since the CPU operates at relatively low voltage levels (typically 5 volts), this noise would have serious impact on its operation if allowed to reach the internal circuits of the CPU.

The I/O section, both inputs and outputs, protects the CPU from electrical noise entering through the I/O modules or wiring. The I/O section is where status signals are filtered to remove noise, voltage levels are validated, and where decisions made by the CPU are put into operation. Inputs provide their status to a storage area within the CPU and outputs are driven from similar stored status in the CPU.

For detailed information on the I/O module types and capacities available for use with a Series Six Plus PLC, refer to the Series Six Data Sheet Manual, GEK-25367 and the Genius I/O User's Manual, GEK-90486. The exact type of I/O module to be specified, for example, 115 V ac or 24 V dc, is usually determined by the field device selected by the user. Tables 1.4 and 1.5 list the available I/O modules.

Table 1.4 STANDARD I/O MODULES

MODULE TYPE	NUMBER OF CIRCUITS AND I/O CAPACITY	
	INPUT	OUTPUT
115 V ac/dc	8	8 (2 Amp **ac,** 1.5 Amp dc)
115 V ac Isolated	6	6 (3 Amp)
115 V ac Protected		4 (4 Amp)
120 V dc		**8 (2 Amp)**
220 V ac/dc	**8**	8 (2 Amp)
220 V ac Isolated	6 (ac/dc)	6 (3 Amp)
12 V dc	8 (ac/dc)	**8 (2 Amp** Sink/Source)
24 V dc	8 (ac/dc)	8 (2 Amp **Sink/Source)**
48 V dc	8 (ac/dc)	8 (2 Amp Sink/Source)
5V TTL	32	32 (25 mA)
10 to 50 V dc	32	32 (250 mA **Sink)** (500 mA Source>
Reed Relay		6 (100 Va Max) NO or NC
Analog (12 bit)		
0 to +10 V dc	8	4 (5 mA Max.)
4 to 20 mA/+1 to +5 V dc	a	(20 mA Max.)
-10 to +10 V dc	a	4 (+/-5mA Max.>
4 to 20 mA		4 (20 mA Max.)
Thermocouples (12 Bit) (Types 3, K+, S, T, B, f, R)	8	
Interrupts	8	

Artisan Technology Group - Quality Instrumentation ... Guaranteed | (888) 88-SOURCE | www.artisantg.com

Table 1.5 GENIUS I/O BLOCKS

BLOCK TYPE	CURRENT/VOLTAGE	NUMBER OF CIRCUITS
115 V ac Grouped	2 A, Total 15 A	8
115 V ac/dc Isolated	2 A, Total 16 A	8
24 to 48 V dc Source	2 A, Total 16 A	16
24 to 48 V dc Sink	2 A, Total 16 A	16
Analog, 12-bit	115 V ac Power Source	4 In/2 Out
Analog, 12-bit	24 to 48 V dc Power Source	4 In/2 Out
Relay Output, NC	115/230 V ac, 2A	16
Relay Output, NO	115/220 V ac, 2A	16
RTD Input	115 V ac/125 V dc	6
RTD Input	24 to 48 V dc	6

In addition to I/O modules, other available modules include system interface modules, communications modules, and intelligent modules.

Table 1.6 OTHER MODULES

SYSTEM INTERFACE MODULES	
Local	I/O Receiver Advanced I/O Receiver I/O Transmitter
Remote	Remote I/O Driver Remote I/O Receiver
COMMUNICATIONS MODULES	
CCM2	Communications Control Module, Type 2 Multi-Mode Protocol, Master/Slave/Peer
CCM3	Communications Control Module, Type 3 Has Functionality of CCM2 and Also Interfaces To Process Controllers
I/O Link Local	Interfaces To Series One and Series Three PLCs. Allows I/O Communications with Those PLCs.
I/O CCM	Functionality of CCM3 in an I/O slot
LAN Interface	Local Area Network Interface Module provides a direct LAN attachment to IEEE 802.4 carrierband network, has two communication services for control data transfer, and provides extensive station configuration, management and diagnostic tools
INTELLIGENT MODULES	
Axis Positioning, Type 1 (Resolver) Axis Positioning, Type 2 (Encoder) High Speed Counter ASCII/BASIC Loop Management	

Artisan Technology Group - Quality Instrumentation ... Guaranteed | (888) 88-SOURCE | www.artisantg.com

OPTIONAL DEVICES SUPPORTING THE SERIES SIX PLUS PLC

Several devices are available as options for the Series Six Plus PLC system. These devices enhance a PLC system by providing capabilities not provided by the PLC itself.

Redundant Processor Unit

The Redundant Processor Unit (RPU) allows two CPUs to operate in parallel, connected to one I/O structure within one system. A fault in either system can be detected and alarmed, and the alternate CPU will continue system operation. The RPU also allows a second I/O structure to be added to the system, which allows switching between CPUs or I/O systems. For a detailed description and operation of the RPU, refer to the Series Six Redundant Processor Unit Manual, GEK-25366.

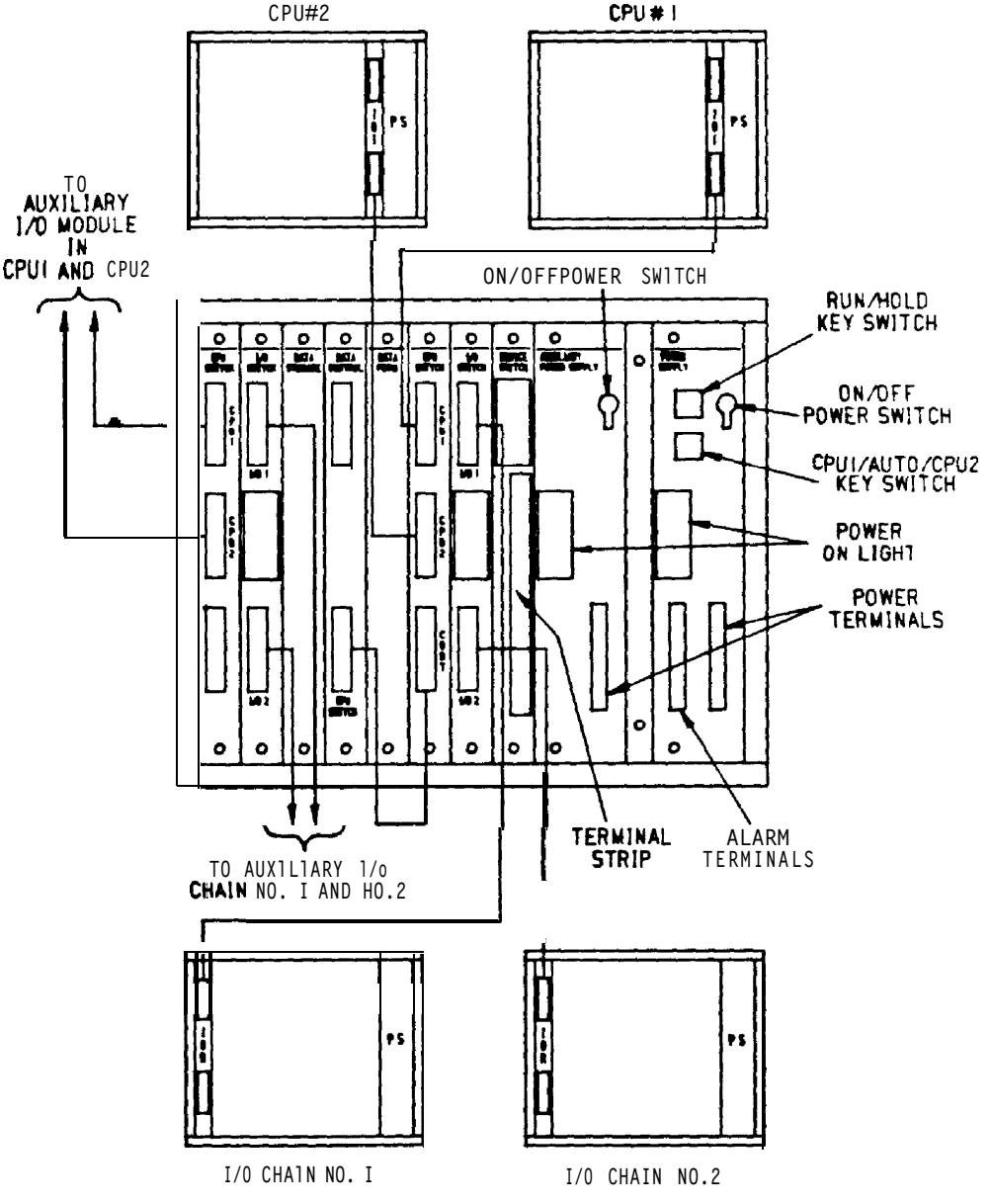

Figure 1.5 REDUNDANT PROCESSOR UNIT CONFIGURATION

Artisan Technology Group - Quality Instrumentation ... Guaranteed | (888) 88-SOURCE | www.artisantg.com

Operator Interface Unit

The Operator Interface Unit (OIU) is an ASCII device that can be driven by the CCM2 or CCM3 module. This unit allows an operator to access, for the purpose of displaying or altering, register data, I/O states, I/O override status, and timer or counter operation. Up to 8 OIUs can be connected to one CPU. A detailed description of the OIU can be found in the Series Six Data Sheet Manual, GEK-25367.

6830103

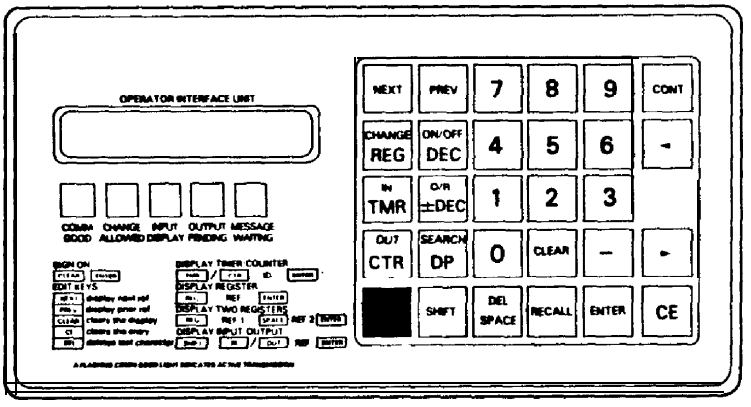

Figure 1.6 OPERATOR INTERFACE UNIT

Operator Interface Terminal

The Operator Interface Terminal (OIT) is an industrial hardened CRT terminal, designed for use in the factory environment. The OIT connects to the CPU through an ASCII/BASIC module, providing a powerful tool for monitoring and interfacing to a control system. The OIT provides CRT background screens for the display of status from the CPU. The user can configure the screens to allow the displays to fit a particular application. Detailed information on operation and configuration of the OIT can be found in the Operator Interface Terminal Manual, GEK-90817.

a41087

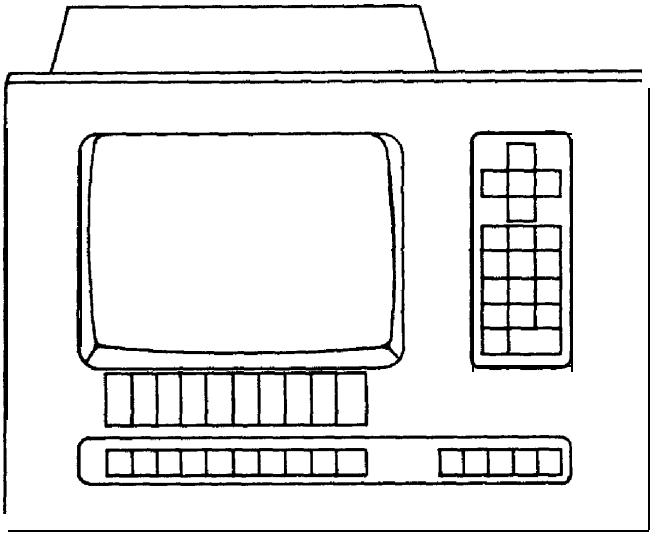

Figure 1.7 OPERATOR INTERFACE TERMINAL

Artisan Technology Group - Quality Instrumentation ... Guaranteed | (888) 88-SOURCE | www.artisantg.com

ProLoop Process Controllers

The Protoop Process Controllers are a group of analog control devices that can be integrated into any Series Six Pius PLC system. Each ProLoop Controller can operate independent of, or under the supervision of a Series Six Plus PLC. The ProLoop Controller system is suitable for applications requiring precise control of temperatures, fluid levels, fluid flows, or pressures.

The ProLoop Controllers are available in a variety of configurations, including Single Loop, Auto Tune, and Multi Loop. The Loop Management Module (LMM) is the interface from the ProLoop Controllers to a PLC. Command and setup information is passed from the PLC to the ProLoop Controllers and status information is returned from the ProLoop Controllers to the PLC.

The ProLoop Controllers can be programmed using a low-cost Hand Held Configurator, which plugs into the front panel of a ProLoop Controller, and allows access to digital information in the ProLoop Controller. For more convenient programming of the ProLoop Controllers, the Processmaste r software package is available. This software package configures a series of screens on the CRT of a Workmaster computer or on the Operator Interface Terminal. This allows the ProLoop Controller system to be easily configured by moving the cursor and entering the proper data.

For complete information on the ProLoop Process Controllers, refer to the ProLoop Process Controllers System Manual, GEK-90802.

a40315

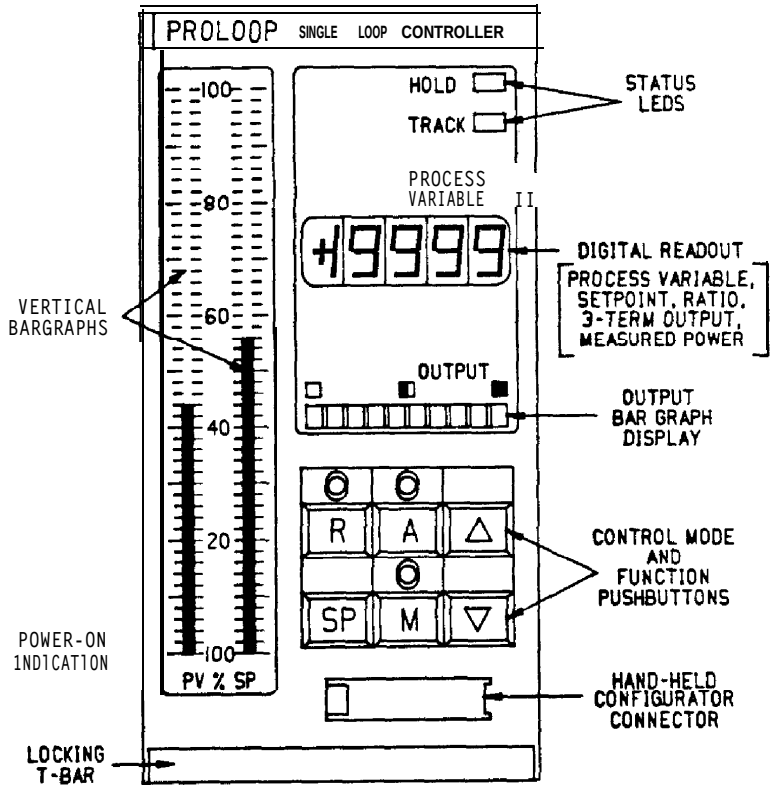

Figure 1.8 TYPICAL PROLOOP SYSTEM EQUIPMENT

Artisan Technology Group - Quality Instrumentation ... Guaranteed | (888) 88-SOURCE | www.artisantg.com

ASCII/BASIC Module

The ASCII/BASIC Module is an intelligent module, which under control of a built-in BASIC programming language, GE/BASIC, can manipulate and transfer data to and from a Series Six Plus CPU. This module can be programmed to read the contents of the scratch pad, any register or status tables (status tables in the Main I/O chain or channels 0 and 81 in a CPU. In addition, this module, under program control can write data into the registers and status tables.

An ASCII/BASIC Module has two configurable serial ports, which give it the ability to interface to external devices using either RS-232, RS-422 or 20 mA current loop, with data rates up to 19.2 K bps. Through these ports, the module can communicate with devices using an ASCII code. These devices typically can be printer terminals, bar code readers, CRT terminals, other computers and other ASCII/BASIC Modules.

The ASCII/BASIC Module can also be used as a stand-alone microcomputer with GE/BASIC developed programs entered, edited, and run independent of the CPU.

The ASCII/BASIC module is available in two versions. Catalog Number IC600BF944 which provides I2K bytes of user memory and Catalog Number IC600BF949 which provides 28K bytes of user memory. Each module requires a single I/O slot and must be installed in a CPU rack or High Capacity I/O rack.

For detailed information on the installation, theory and use of the ASCII/BASIC Module, refer to the ASCII/BASIC Module Manual, GEK-25398.

Axis Positioning Modules

The Axis Positioning Modules (APMs) are intelligent programmable, single axis positioning controllers that require only a single slot of a High Capacity I/O rack or a CPU rack. They provide a real time interface between a Series Six Plus PLC and a servo or stepper controlled axis and thereby fully integrate closed-loop position or velocity control with overall machine control.

The APMs are programmed and monitored using the Workmaster computer. Commands and return data are passed to and from an APM through 32 consecutive inputs and outputs. The various parameters exchanged between an APM and CPU user logic include discrete commands, set up commands, move commands and special commands in the output group and in the input group; discrete return data and return data.

The APM is available in two versions. Catalog Number IC600BF915 is APM Type 1 (Resolver Feedback) and Catalog Number IC600BF917 is APM Type 2 (Encoder Feedback).

For detailed information on Axis Positioning Modules refer to the applicable user's manual. These manuals are:

Axis Positioning Module, Type 1, GEK-25368.
Axis Positioning Module, Type 2, GEK-90800.

Artisan Technology Group - Quality Instrumentation ... Guaranteed | (888) 88-SOURCE | www.artisantg.com

Communications Control Modules

In addition to controlling peripheral devices, the Communications Control Modules (CCM) provide for communications among all of the GE Fanuc - NA PLCs, which include the Series Six Plus, Series Six, Series Three, Series One Plus, Series One, and Series One Junior. In addition, the Workmaster and Cimstar I computers, Operator Interface Terminals and host computers can be included in a communications system.

These devices all use the CCM protocol which supports point-to-point and multidrop configurations with data rates from 300 to 38.4K baud. A master CCM device such as the Series Six Plus PLC can poll up to eight slave devices controlled by the Communications Request function (SCREQ).

GENET Factory LAN

For applications requiring much broader communications capabilities than the CCM can provide or a Local Area Network (LAN) for communications with other factory automation equipment, the GEnet Factory LAN is available. The GEnet Factory LAN is a 10M bps broadband token passing bus which provides high speed communications between GE Fanuc - NA equipment, including Programmable Controllers, Numerical Control equipment and higher level factory level management control systems.

The GEnet Factory LAN is based on accepted industry standards. It uses the International Standards Organization's Open System Interconnection (OSI) model as the basis for its communications architecture. GEnet complies with the General Motors Manufacturing Automation Protocol (MAP) specification and with the ANSI/IEEE Standard 802.4-1985 for token bus networks.

The Programmable Controllers and Numerical Control equipment interface to the broadband token bus through a Bus Interface Unit (BIU). The BIU is tailored by loading device specific software to provide the required interface to the various automation products. As an example, any device supporting the CCM protocol can access the GEnet Factory LAN with translation to MAP through the BIU.

Other basic components of the GEnet Factory LAN are the Network Management Console (NMC) and the Head End Remodulator. The NMC provides overall system configuration management and control. It operates on a Workmaster or Cimstar I industrial computer equipped with PLC-BIU hardware and network management software. The head end contains the equipment required to provide for RF operation on the broadband cable.

For further information on the GEnet Factory LAN, refer to the System User's Manual, GEK-96608 and the Network Management Console User's Manual, GEK-96607.

Artisan Technology Group - Quality Instrumentation ... Guaranteed | (888) 88-SOURCE | www.artisantg.com

Figure 1.9 is an illustration of a typical configuration for a GEnet Factory LAN.

a41051

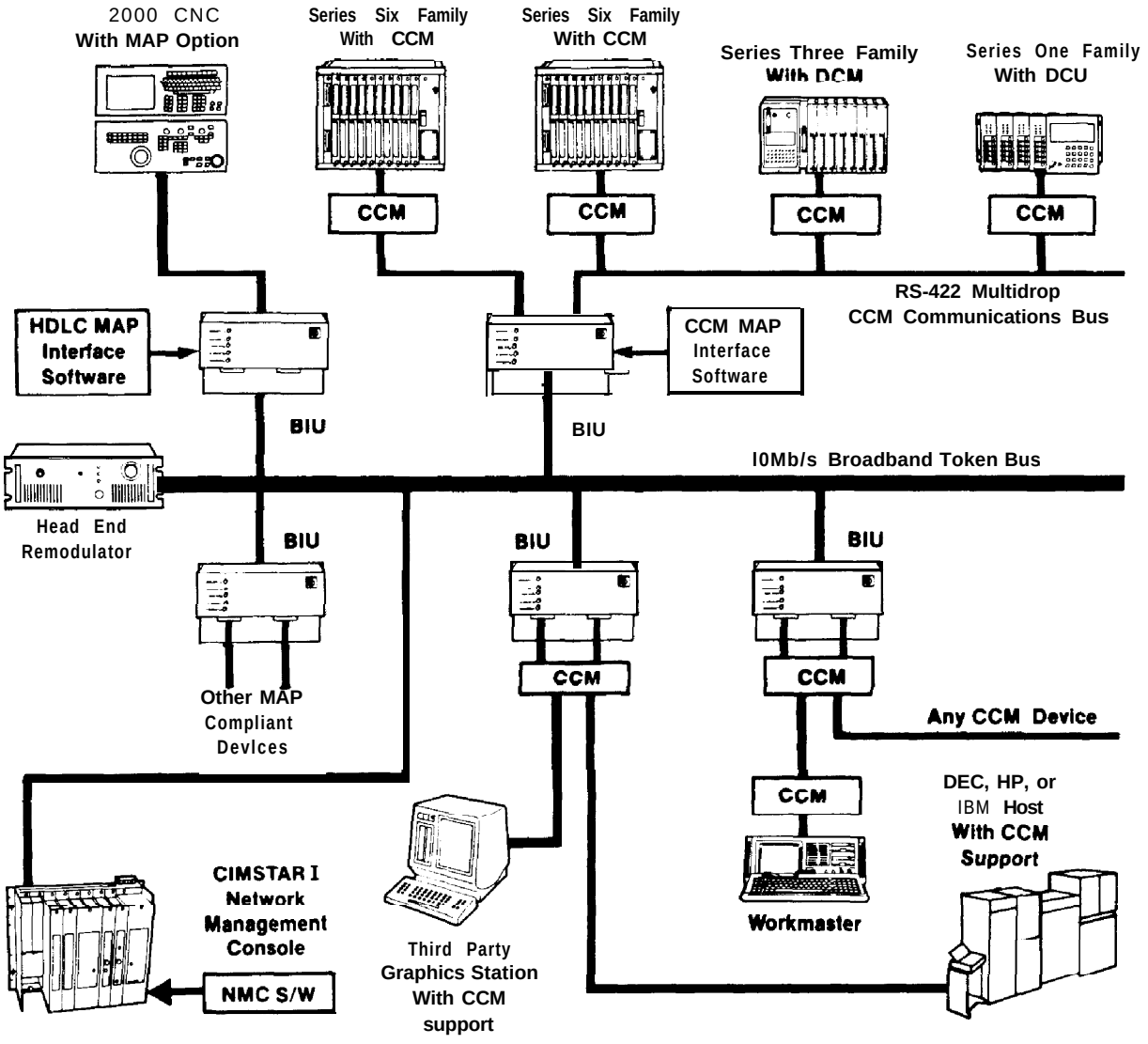

figure 1.9 GEnet FACTORY LAN

Artisan Technology Group - Quality Instrumentation ... Guaranteed | (888) 88-SOURCE | www.artisantg.com

Series Six PLC Network Interface

The Series Six PLC Network (or LAN) interface modute is a member of the family of GEnet Factory LAN communications products. The Series Six LAN Interface module provides a direct connection for a Series Six Plus PLC to a carrierband network. The LAN consists of two boards (controller board and modem board) which plug directly into slots 5 and 6 of the Series Six Plus CPU rack. The LAN Interface module connects directly into the carrierband cable plant through the 5 Mbps carrierband modem board. Intermediate devices such as bridges or gateways are not required. The direct connection provides the high performance required for real-time applications. Carrierband networks are designed to handle small to medium size applications with 6 to 20 stations as a typical number which might be attached, although more stations can be connected. Carrierband networks can extend over cable distances as far as 2000 feet.

a4 1993

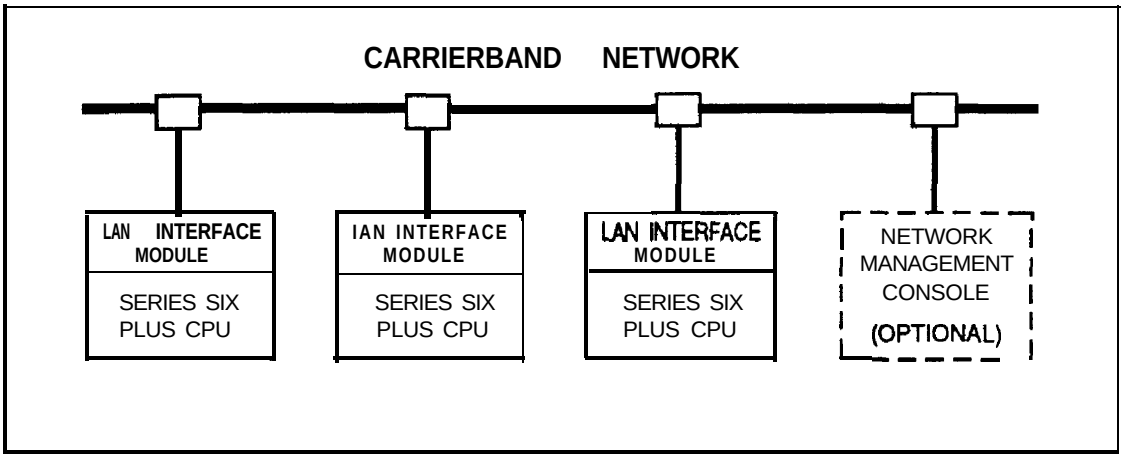

FIGURE 1.10 – LAN Interface Module Connects a Series Six Plus PLC to a Carrierband Network

Datagram Communications Service

There are two types of communication services which transfer control data on the net work. They are the Datagram Communication Service and the Global Data Communication Service. The Datagram service is a real-time service which provides peer-to-peer message transfers (read and write messages) from one station on the network to another. Each request must be explicitly initiated in the ladder logic program using the Series Six Serial Request [SCREQ] instruction, and the initiating station receives immediate acknowledgement that the data was or was not transferred successfully. The Datagram service anticipates MAP/EPA specifications and will evolve to comply with them when they are approved as standards. Datagram services should be used to send messages which are destined to a single station or whose delivery must be guaranteed.

Artisan Technology Group - Quality Instrumentation ... Guaranteed | (888) 88-SOURCE | www.artisantg.com

Global Data Service

Global Data service is a proprietary, real-time protocol which provides a means of sharing data (such as blocks of registers or I/O points) among a group of stations. Once a request is initiated using a single [SCREQ] instruction, data continues to be transferred at a rate specified in the request. This service is not part of the MAP specification, but co-exists on the network with MAP messages without interference. Global Data services should be used when the application requires that data must be updated on a periodic basis and shared by multiple stations on the network. In distributed control applications it allows I/O points wired to one PLC to be made available to other PLCs quickly and with minimum intervention by the ladder logic.

RS-232 to RS-422 Adaptor Unit

The RS-232 to RS-422 Adaptor Unit converts RS-232 signal levels to RS-422 signal levels and can be used to isolate and repeat communications signals. If a device uses RS-422 signal levels for communications, the Adaptor, when connected between those devices and devices requiring RS-232 signal levels can be used with no loss in baud rate. The Adaptor unit also has a multidrop capability that can expand a normal eight device RS-422 link into a 64 device link by using eight Adaptor units. If an RS-422 link should be required to extend beyond its normal 4000 feet (1.2 Km), the Adaptor can be used as a repeater to boost the signal levels and obtain another 4000 feet of driving distance for the signals.

a42088

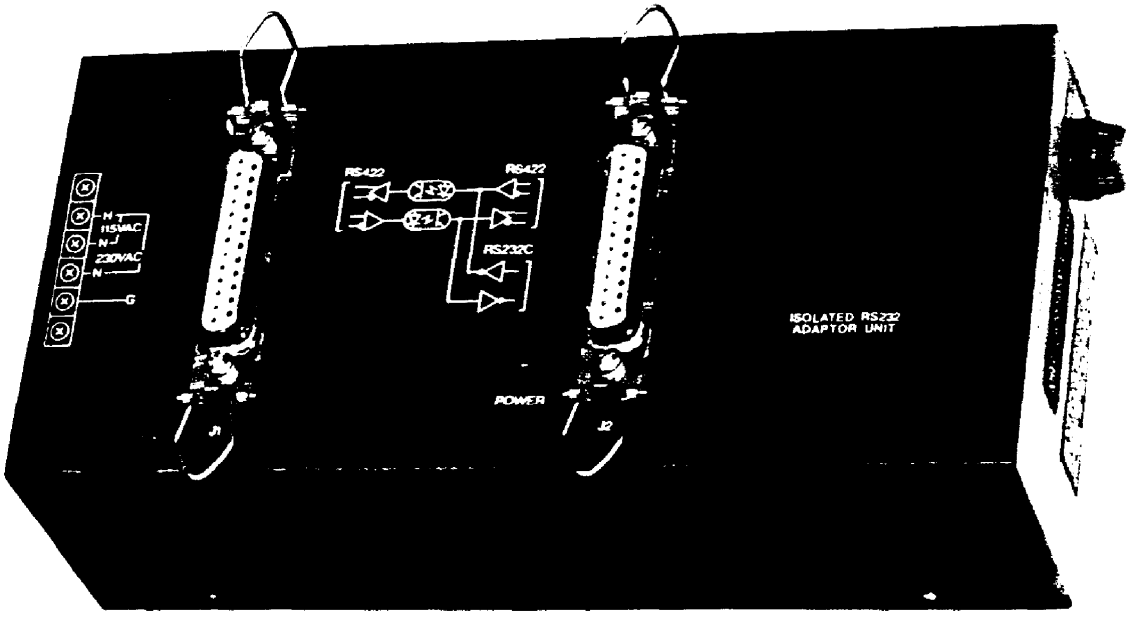

figure 1.11 RS-232 to RS-422 ADAPTOR UNiT

Artisan Technology Group - Quality Instrumentation ... Guaranteed | (888) 88-SOURCE | www.artisantg.com

SYSTEM PLANNING

Decisions such as the number of 115 V ac solenoids, 24 V dc solenoids, motor starters, limit switches (operating voltages), control panel lamps (voltage required), pushbuttons, and external relays have a major impact on the configuration of any PLC. These parameters should be established as early as possible in the overall design of the control system. Being a flexibte device, the PLC configuration, either on paper or in hardware, can easily be changed if requirements change. Typically, the user provides the field devices, wires them to the I/O section, and provides the power source to operate them.

TYPICAL APPLICATIONS USING PLCs

Programmable Logic Controllers are used in a wide variety of machine and process control applications. These applications range from replacing a few relays to controlling complete factory automation projects. Table 1.7 is a list of typical applications for the Series Six Plus PLC. This list is only a very small sampling of possible PLC applications, many others are possible and more are being identified all the time For further information on any of the applications listed here or any other application you may have, contact your local GE Fanuc - NA Programmable Logic Controller Distributor, GE Fanuc - NA sales office or GE Fanuc Automation North America, Inc. in Charlottesville, Virginia.

Table 1.7 TYPICAL PLC APPLICATIONS

Auto Insertion	Energy Management	Railroad Switching
Bagging	Engines	Robots
Baking	Engine Test Stands	Rolling
Bonding	Extrusion	Routing
Boxing	Forging	Security Systems
	Gas Fields	Sewage Treatment
Capping	Gauging	Solar Energy
Casting	Generators	Sorting
Cement Batching	Grinding	Spool winding
Combustion Control	Heat Treatlng	Stackers
Compression Molding	Injection Molding	Tire Body Building
Conveyors	Joining	Traffic Control
Cranes	Milling	Treating
Cutting	Mining Operations	Turbines
Data Collection	Navigation	Water Treatment
Dipping	Nuclear Plants	Weaving
Drawing	Oil Fields	Welding
Drilling	Pipelines	Well Flooding

Artisan Technology Group - Quality Instrumentation ... Guaranteed | (888) 88-SOURCE | www.artisantg.com

PLC TERMINOLOGY

In the preceding discussion of Programmable Logic Controller concepts, many terms were discussed that you should be familiar with relating to PLCs. Table 1.8 provides a list of the most common PLC terms. A more complete list of terms is provided in the glossary in the back of this manual.

Table1.8 COMMON PLC TERMINOLOGY

TERM	DEFINITION
PLC	Programmable Logic Controller or Programmable Controller. An industrial control device using microprocessor technology to perform logic decision making with relay 1adder diagram based programming.
Programmer	A device for entry, examination and alteration of the PLC's memory including logic and storage areas.
Logic	A fixed set of responses (outputs) to various external conditions (inputs). All possible situations for both synchronous and non-synchronous activity must be specified by the user. Also referred to as the program.
CPU	Central Processor Unit - the physical unit in which the PLC's intelligence resides. Decision making is performed here.
Memory	A physical place to store information such as programs and/or data.
K	An abbreviatlon for kilo or exactly 1024 in the world of computers. Usually related to 1024 words of memory.
Word	A measurement of memory length, usually 4, 8, or 16 bits long. In the Series Six Plus PLC, 16 bits.
CMOS	A read/write memory that requires a battery to retain its content upon loss of power.
PROM	A read only memory that requires a special method of loading, but is inherently retentive upon power loss.
I/O	Input/Output - that portion of the PLC to which field devices are connected. Isolates the CPU from electrical noise.
Noise	Undesirable electrical disturbances to normal signals generally of high frequency content.

Artisan Technology Group - Quality Instrumentation ... Guaranteed | (888) 88-SOURCE | www.artisantg.com

Table 1.8 COMMON PLC TERMINOLOGY (Continued)

Input	A signal, typically ON or OFF, that provides information to the plc.
output	A signal typically ON or OFF, originating from the PLC with user supplied power to control external devices based upon commands from the CPU.
field Devices	User supplied devices typically providing information to the PLC (Inputs: pushbutton, limit switches, relay contacts, etc.) or performing PLC tasks (Outputs: motor starters, solenoids, indicator lights, etc.).

PLC COMPATIBiLITY GUIDE

Most of the hardware and software items can be used by both the Series Six Plus and the earlier models of the Series Six CPU's As an aid to the compatibility of these items, a basic compatibility guide is provided in table 1.9. For comprehensive information on compatibility of equipment, contact your GE Fanuc - NA sales office or PLC Distributor

Table1.9 COMPATIBILITY GUIDE
SERIESSIX PLUS PLC VS SERIES SIX PLCs

Catalog Number	Description	Model of PLC 60	600	6000	6+
Power Supplies					
IC600PM500	115/230 V ac Power Supply	•	•	•	•
IC600PM541	24 V dc Power Supply	•	•	•	•
IC600PM546	125 V dc power Supply	•	•	•	•
CPU Racks, 8-Slot					
IC600CP610					• [1]
CPU Racks, 11-Slot					
IC600CR201		•			
IC600CR301			•		
IC600CR401				•	
IC600CP600					•
Memory					
IC600CM552	2K Logic/256 Registers	• [2]			• [2]
IC600CM554	4K Logic/1K Registers	• [2]			• [2]
IC600CM544	4K Logic		•	•	
IC600CM548	8K Logic		•	•	

1. Required for Expanded II functions.
2. Parity checking is not available with this combination.

Artisan Technology Group - Quality Instrumentation ... Guaranteed | (888) 88-SOURCE | www.artisantg.com

Table 1.9 COMPATIBILITY GUIDE
SERIES SIX PLUS PLC VS SERIES SIX PLCs (Continued)

Catalog Number	Description	Model of PLC 60	600	6000	6+
Memory (Continued)					
IC600CB508	1K Registers		•	•	
IC600CB507	8K Registers		•	•	
IC600CB511	16K Registers		•	•	
IC600CB504	Internal Memory		•	•	
IC600LR605	4K Logic/1K Registers	• 2			•
IC600LR612	4K Logic/8K Registers	• 2			•
IC600LR616	8K Logic/8K Registers	• 2			•
IC600LR624	16K Logic/8K Registers	• 2			•
IC600LR632	16K Logic/16K Register	• 2			•
IC600LR648	32K Logic/16K Registers	• 2			•
IC600LX605	4K Logic/1K Registers	• 2			• 1
IC600LX612	4K Logic/8K Registers	• 2			• 1
IC600LX616	8K Logic/8K Registers	• 2			• 1
IC600LX624	16K Logic/8K Registers	• 2			• 1
IC600LX648	32K Logic/16K Register	• 2			• 1
IC600LX680	64K Logic/16K Registers	• 2			• 1
Functions					
IC600CB525	Advanced Functions	•	•	•	•
IC600CB526	Expanded Functions	•	•	•	•
IC600CB515	Expanded II Functions				•
Arithmetic Control					
IC600CB500		•	•	•	•
IC600CB524		•	•	•	• 1
Input/Output System					
IC600CB503	I/O Control	•	•	•	•
IC600CB513	Auxiliary I/O Control			•	•
IC600BF900	I/O Transmitter (Local)	•	•	•	•
IC600BF801	Remote I/O Receiver	•	•	•	•
IC600BF901	Remote I/O Driver	•	•	•	•
IC660CBB900/902	Bus Controller, with diagnostics	•	•	•	•
IC660CBB901/903	Bus Controller, without diagnostics	•	•	•	•
Standard I/O modules		•	•	•	•
Genius I/O Blocks		•	•	•	•
Other Modules					
Communications Control Modules		•	•	•	•
Intelligent Modules		•	•	•	•
LAN Interface		•	•	•	•

1. Required for Expanded II functions.
2. Parity checking is not available with this combination.

Artisan Technology Group - Quality Instrumentation ... Guaranteed | (888) 88-SOURCE | www.artisantg.com

Table 1.9 COMPATIBILITY GUIDE
SERIES SIX PLUS PLC VS SERIES SIX PLCs (Continued)

Catalog Number	Description	Model of PLC			
		60	600	6000	6+
Peripheral Devices					
IC600RP551	RPU (AC Powered)	•	•	•	•
IC600RP554	RPU (DC Powered)	•	•	•	•
IC600KD500	Operator Interface Unit	•	•	•	•
IC600KD510	Operator Interface Terminal (Amber)	•	•	•	•
IC600KD512	OIT (Color)	•	•	•	•
IC600PKyyy	ProLoop (All)	•	•	•	•
Programmer					
Workmaster	All Versions	•	•	•	•
CIMSTAR I	All Versions	•	•	•	•
IBM-PC, PC-XT, and PC-AT	Serial Version	•	•	•	•
Software Packages [1]					
Logicmaster 6, VuMaster, Processmaster Motionmaster, Alarm Master		•	•	•	•

1. For availability of other software packages contact your PLC Distributor, GE Fanuc - NA sales office, or GE Fanuc Automation North America, Inc., Charlottesville, VA.

Artisan Technology Group - Quality Instrumentation ... Guaranteed | (888) 88-SOURCE | www.artisantg.com

CHAPTER 2
PHYSICAL EQUIPMENT CONFIGURATION

This chapter describes the components of a Series Six* Plus Programmable Logic Controller. Included are descriptions of the Central Processing Unit, power supplies, combined memory modules, racks, optional modules, system configuration, standard rack-based I/O system, Genius* I/O subsystem and peripheral devices. For a complete list of available hardware and software, refer to GEP-761, *Products and Publications* Master Price List. For further information on any of the individual components described in this chapter that are not part of the CPU, refer to the applicable manual.

PRODUCT STRUCTURE FOR THE SERIES SIX PLUS PLC

The product structure for the Series Six Plus PLC is such that many different configurations, including combinations of I/O modules, may be contained in a single CPU rack. The design is flexible to meet the user's requirements. Figure 2.1 illustrates this product structure, showing the location of modules in the rack.

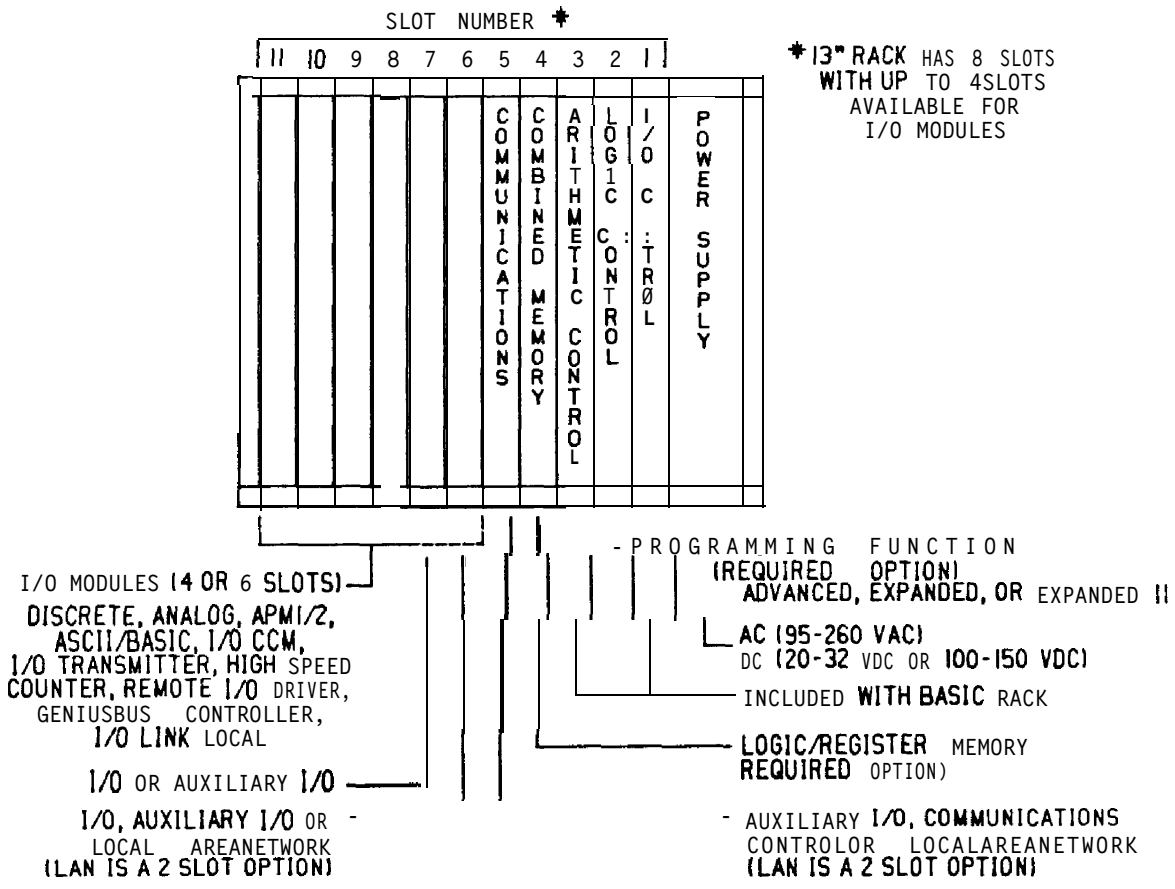

Figure 2.1 PRODUCT STRUCTURE FOR SERIES SIX PLUS PLC

Each of the modules shown in figure 2.1 is described on the following pages. The descriptions include information relative to module location in the rack, and the function of each module in the system. For installation instructions, refer to Chapter 3.

Artisan Technology Group - Quality Instrumentation ... Guaranteed | (888) 88-SOURCE | www.artisantg.com

19 Inch CPU Rack Configuration

The 19 inch (483 millimeters) rack used to contain the Series Six Plus PLC modules is designed for either 19 inch rack or panel mounting. Figure 2.2 is an illustration of the rack. Each rack is supplied with reversible mounting brackets for mounting as required by the user. With the brackets attached to the front of the rack as shown in figure 2.3, the rack can be mounted in a standard 19 inch rack. By rotating the brackets 90 degrees and mounting them on the rear of the rack, as shown in figure 2.4, the rack can then be either wall or panel mounted.

Each rack has 11 slots to accommodate modules. For reference purposes these slots are numbered from 1 through 11, beginning at the right slot (next to the power supply). The slot number is printed on the rack backplane adjacent to the bottom board slot. Slots 6 through 11 can contain I/O modules. Any module in the I/O system can be placed in any of these slots as long as their total power requirements, in addition to the power requirements of the CPU modules, do not exceed the power output of the power supply, which is 16.5 amps (275 units of load) for +5 V dc, 1.5 amps (60 units of load) for +12 V dc and 1 .0 amps for -12 V dc (40 units of load). A list of the power requirements, expressed in units of load, for each I/O module is included in Chapter 3, Installation.

If an Auxiliary I/O module is added to a system, it can be placed in slot 5, 6 or 7. If the GEnet Series Six Network Interface LAN (Local Area Network), which is a two-board module, is required for a system those modules must be placed in slots 5 and 6, which would then require the Auxiliary I/O module to be placed in slot 7. Slots 1 through 4 are for the I/O Control, Logic Control, Arithmetic Control, and Combined Memory, in that order. If a Communications Control module is selected, it is placed in slot 5.

13 Inch CPU Rack Configuration

The 13 inch (330 millimeters) rack is designed to be mounted several different ways, including rack mount in a I0" deep rack (brackets on front), rack mount in a standard 19" rack (wide brackets on front), panel mount (brackets on rear sides), and panel mount in a NEMA 12 wide (30") enclosure (brackets on rear top and bottom). When mounted in a NEMA 12 enclosure, two CPUs can be mounted side-by-side. Each 13" rack has 8 slots available to accommodate modules. The slots are numbered from 1 through 8, beginning at the right slot, next to the power supply. All of the modules are located in the same position in the slots as in the 19" rack with either 1 or 3 slots available for I/O modules. The 13" rack requires the wide range ac power supply, catalog number IC600PM500.

Basic Unit Configuration

The Series Six Plus PLC basic CPU unit, as received from the factory, consists of a rack with cable tray, a power supply, an I/O Control module, an Arithmetic Control module and connecting ribbon cable (to the Logic Control module), a module extraction/insertion tool, an I/O terminator plug, rack mounting brackets and hardware, and a Series Six Plus User's Manual. Any blank faceplates that are required must be ordered separately. The Logic Control module must be ordered separately for the required level of functions, either Advanced, Expanded, or Expanded II. One of six available Combined Memory modules must also be selected and ordered separately. The required power supply for the 19" rack must be specified and can be either the wide range ac version or one of the two dc versions (24 V dc or 125 V dc). The only power supply currently available for the 13" rack is the wide range ac supply. The Expanded II functions require the IC600CB524 Arithmetic Control module, the IC600CB610 8-slot CPU rack, or a 19" CPU rack having a date code later than 10/87, and one of the IC600LX logic memory modules (8K minimum registers.

Artisan Technology Group - Quality Instrumentation ... Guaranteed | (888) 88-SOURCE | www.artisantg.com

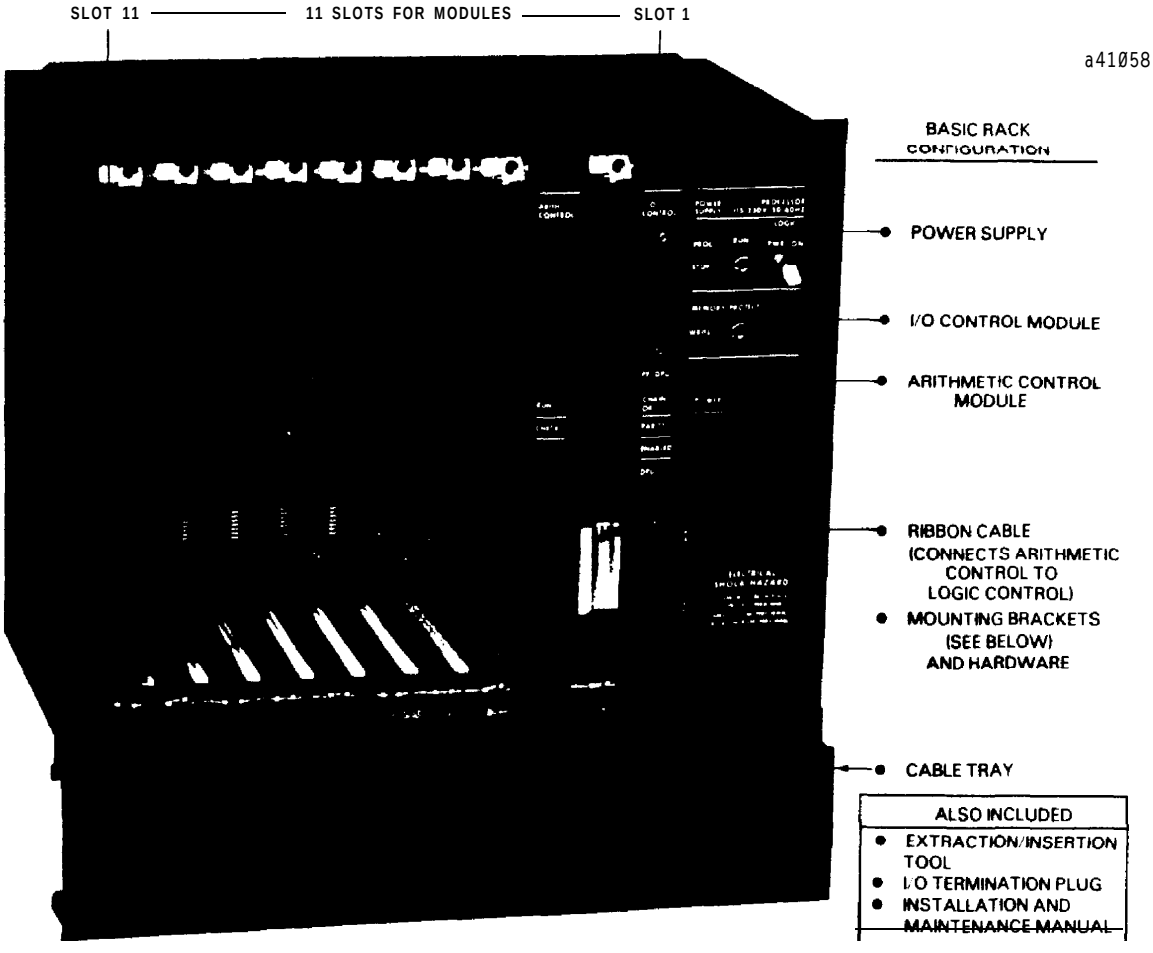

Figure 2.2 BASIC CPU RACK CONFIGURATION FOR THE SERIES SIX PLUS PLC

~6830 124

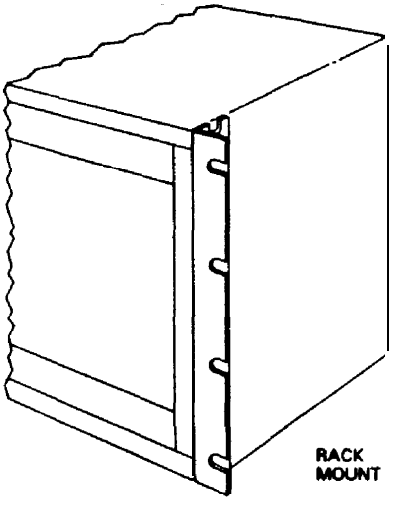

Figure 2.3 BRACKETS IN POSITION FOR RACK MOUNTING

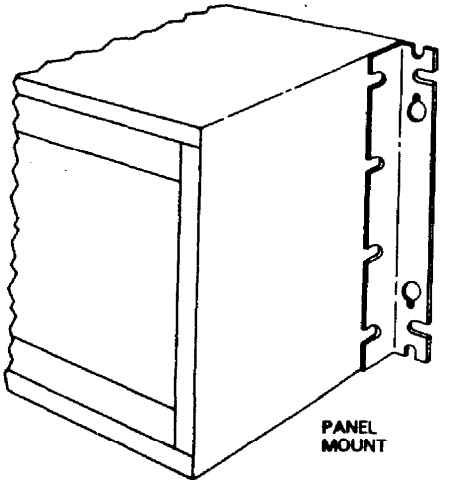

Figure 2.4 BRACKETS IN POSITION FOR WALL OR PANEL MOUNTING

Artisan Technology Group - Quality Instrumentation ... Guaranteed | (888) 88-SOURCE | www.artisantg.com

POWER SUPPLY FOR THE SERIES SIX PLUS PLC

The rack power supply is mounted at the extreme right of the rack as shown in the illustration in figure 2.2. The power supply provides regulated +12, -12 and +5 V dc to the rack backplane. It is used. to power the GE Fanuc supplied modules contained in the rack. Input and Output field devices must be supplied with their own source of power at the proper voltage levels. The power supply is a high-capacity supply and is available for the 19" rack in three versions, wide range ac, 24 V dc, or 125 V dc. The 13" rack requires the wide range ac supply. The current capacity of each power supply is 275 units of load. Each unit of load corresponds to approximately 60 mA of current consumption.

The ac power supply (catalog number IC600PM500) is a wide range switching supply, that will accept an ac input ranging from 95 to 260 V ac at 47 to 63 Hz. The two dc power supplies that are available can be operated directly from a dc power source, such as batteries or inverters, that provide dc power in the range of 20 to 32 V dc (catalog number IC600PM541), or 100 to 150 v dc (catalog number lC6OOPM546). Each power supply has several user items mounted on the faceplate. Figure 2.5 illustrates the power supplies (ac version shown), identifying user items. Ac and dc version faceplates are both shown for reference.

s6830116/117

s6840224/244

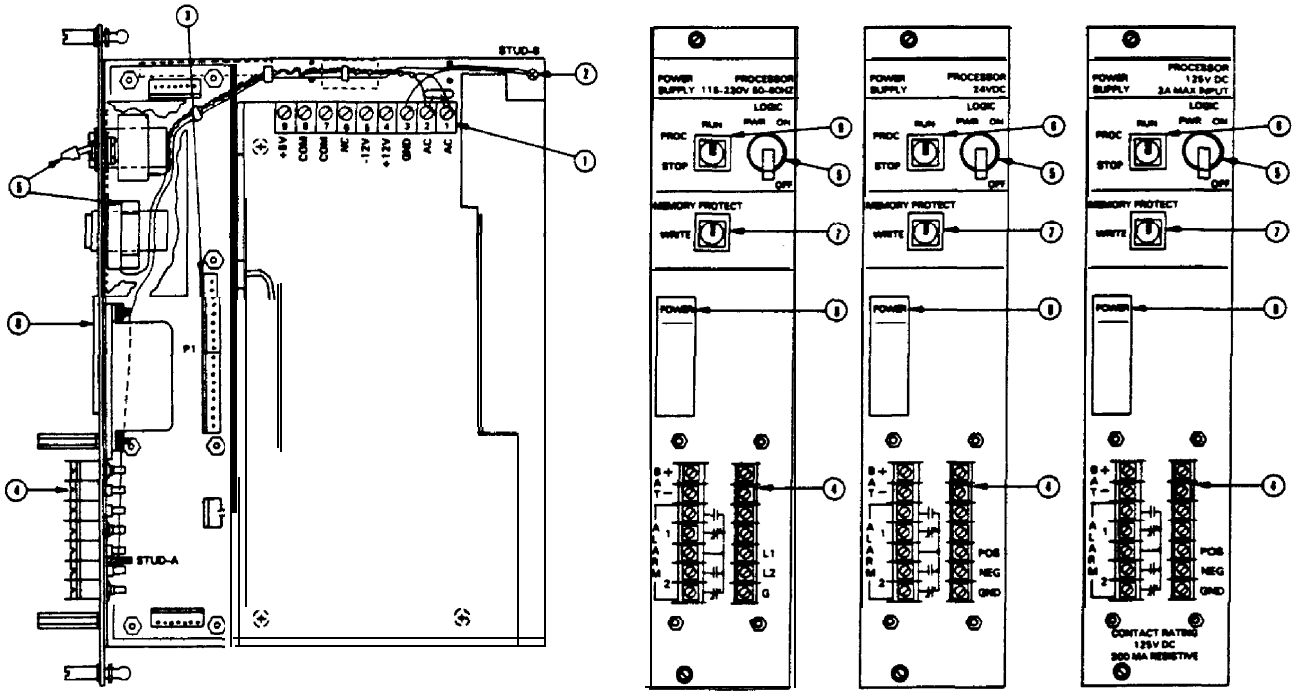

1. Internal Terminal Strip
2. Chassis Ground Terminal
3. 18-Pin Connector: Connects signal cable from rack backplane.
4. Front-Panel Connector Block
5. Power Switch/Circuit Breaker
6. CPU RUN/STOP Key Switch
7. MEMORY PROTECT Key Switch
8. POWER Light.

Figure 2.5 ILLUSTRATION OF POWER SUPPLIES

Artisan Technology Group - Quality Instrumentation ... Guaranteed | (888) 88-SOURCE | www.artisantg.com

Each of the power supply user items shown in the preceding illustration is described below. For detailed information on installation of a power supply, refer to the applicable data sheet in the Data Sheet manual; wide range ac supply (GEK-83505), 24 V dc supply (GEK-90761), or 125 V dc supply (GFK-0065).

Table 2.1 POWER SUPPLY USER ITEMS

USER ITEM	DESCRIPTION
LOGIC POWER SWITCH	This switch is used to switch the ac or dc power source to the supply ON and OFF.
CPU RUN/STOP KEYSWITCH	This keyswitch is used to put the CPU in either the RUN or STOP mode. With the CPU in the RUN mode, normal scanning operation takes place and outputs are activated. In the STOP mode, scanning is halted and outputs are deactivated.
MEMORY PROTECT/WRITE KEYSWITCH	This keyswitch is used to allow user memory to be written to (new program entered or existing program edited) when in the WRITE position. When in the MEMORY PROTECT position, the user memory can not be accessed. This is a safeguard against unauthorized or inadvertent changing of the user program.
POWER LIGHT	This is a visual indicator that the dc voltages provided by the power supply are available and have reached their proper operating levels, The LED is viewed through the translucent lens on the faceplate. ON The voltage levels of the 3 dc outputs (+5, +12 and -12 V dc) are available and are within the specified tolerance. OFF One or more of the 3 dc voltages is out of tolerance.
TERMINAL BLOCK	A terminal block is mounted at the bottom of the power supply faceplate. Two groups of 7 screw terminals are located on the block. These terminals provide the connections for the source of power, either ac or dc, 2 sets of alarm relay contacts and an external auxiliary battery. The auxiliary battery is optional and is used to provide battery back-up of the CMOS-RAM memory on the combined memory module.

Artisan Technology Group - Quality Instrumentation ... Guaranteed | (888) 88-SOURCE | www.artisantg.com

Terminal Block Connections

Figure 2.6 is an illustration of the terminal block. The 3 bottom terminals on the right group of terminals are for connecting the input source of power, either ac or dc, depending on whether an ac or dc power supply is selected. The 4 remaining terminals on the right side have no internal connections to the power supply.

70tmp11
a41063

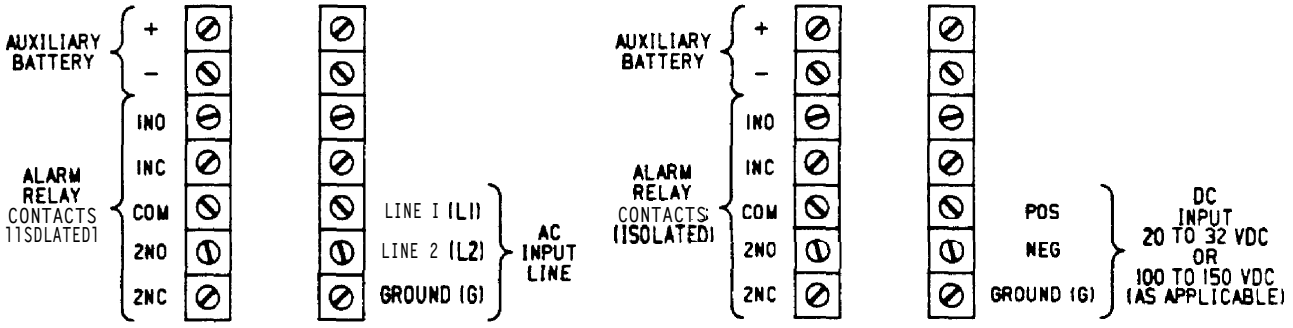

Figure 2.6 CPU TERMINAL BLOCK CONNECTIONS

The optional external auxiliary battery, if included in a system, is connected to the 2 top terminals on the left group of terminals. The auxiliary battery voltage is routed through a regulator in the power supply, which provides a regulated voltage to back-up the CMOS-RAM memory circuitry in the event of a no power condition to the supply.

The remaining 5 terminals on the left group of terminals provide external signals when certain internal faults are detected by the CPU. The minor alarm (terminals 1N0 and 1NC) faults are advisory in nature and do not affect the operation or reliability of the PLC. The major alarm (terminals 2N0 and 2NC) faults are an indication that the CPU has detected a fault affecting normal operation and has halted its scanning in order to prevent unreliable or unpredictable operation of the PLC. If a fault does occur, status indicators on various modules will point to the specific cause of the fault.

NOTE

During normal operation the alarm relays are energized. When an alarm condition is detected, the contacts 1N0 and 2N0 open, and the contacts 1NC and 2NC close.

The alarm relay logic is located on a terminal board in the power supply. The alarm relay provides isolated outputs rated at 115 V ac or 28 V dc, 1 amp resistive load. The major alarm causes the CPU status to be set to stop. The minor alarm causes an error indication to be recorded, but the CPU status is not set to stop. Table 2.2 lists some of the problems that can cause the alarm relays to switch.

Artisan Technology Group - Quality Instrumentation ... Guaranteed | (888) 88-SOURCE | www.artisantg.com

Table 2.2 CONDITIONS CAUSING ALARMS

MAJOR ALARMS	MINOR ALARMS
CPU or I/O parity error	Back-up battery voltage low
CPU self-test failure	
CPU watchdog timer timed out	CPU or I/O power supply turned off
Back-up battery voltage drops below operating level	
Any CPU or I/O power supply voltage out of tolerance	Communications Control or Data Processor error (fault jumpers in or out of circuit)
CPU power supply turned off	
Communications Control or Data Processor error (fault jumpers in circuit)	

Power Supply Specifications

Table 2.3 lists specifications for both the ac and dc power supplies.

Table 2.3 POWER SUPPLY SPECIFICATIONS

Input, ac supply:	95 to 260 V ac, 250 Va maximum Frequency, 47 to 63 Hz
Input, dc supplies:	20 to 32 V dc, 180 Va maximum or 100 to 150 v dc, 180 Va maximum
Output Voltage/Current:	+5 V dc, 16.5 A, maximum +12 V dc, 1.5 A, maximum -12 V dc, 1.0 A, maximum Total power from all outputs must be less than 90 watts
Allowable power interruptions:	ac: 33 mSec minimum, 115 V ac line dc: 10 mSec minimum, 20 V dc line 4 mSec minimum, 100 V dc line
Noise Immunity:	Meets requirement of NEMA ICS 2-230 and ANSI C37.90A
Operating Temperature: Storage Temperature: Humidity:	0° to 60° C (32° to 140°F), (outside of rack) -20° to +70°C (-4° to 158°F) 5% to 95% (non-condensing)
Auxiliary Battery Input: Dimensions: Power Supply	8 to 28 V dc 12.46 x 9.0 x 2.75 inches (317 x 229 x 70 mm)

Artisan Technology Group - Quality Instrumentation ... Guaranteed | (888) 88-SOURCE | www.artisantg.com

Outputs and System Control Signals

The CPU power supply provides 3 dc outputs; +5 V dc, +12 V dc and -12 V dc. It also generates system control signals for use throughout the CPU. The dc voltages are connected directly to the rack backplane. Logic signals are distributed through connectors connected to the backplane. Figure 2.7 is a block diagram of the CPU power supply showing connections to the terminal blocks, dc voltages available, and system control signals to and from the power supply.

a41074

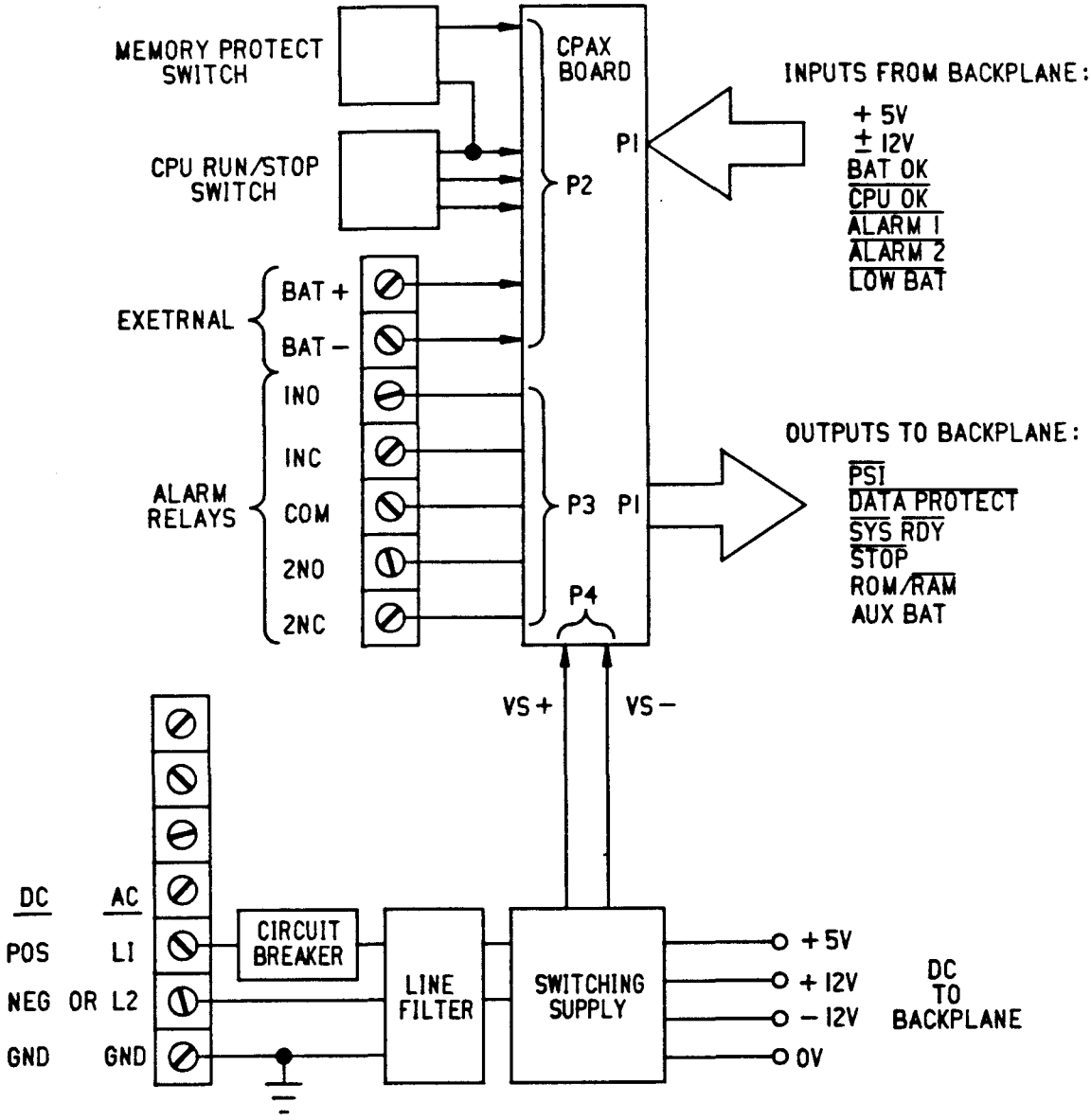

Figure 2.7 CPU POWER SUPPLY BLOCK DIAGRAM

Artisan Technology Group - Quality Instrumentation ... Guaranteed | (888) 88-SOURCE | www.artisantg.com

Power Supply Auxiliary Circuit Board

An auxiliary circuit board (CPAX) is mounted inside the power supply. This circuit board performs several system functions which are summarized below. A block diagram of this board is shown in figure 2.8.

- Senses the levels of the +5, +12 and -12 V dc supplies and provides 3 output signals to the CPU: PSI, DATA PROTECT, and SYS RDY.
- Provides switch debouncing for the RUN/STOP switch located on the front panel.
- Provides control logic and relay isolation for the 2 user alarm signals.
- Provides voltage regulation for a user supplied (6 to 28 V dc) auxiliary back-up battery for the CMOS-RAM memory devices.

7059

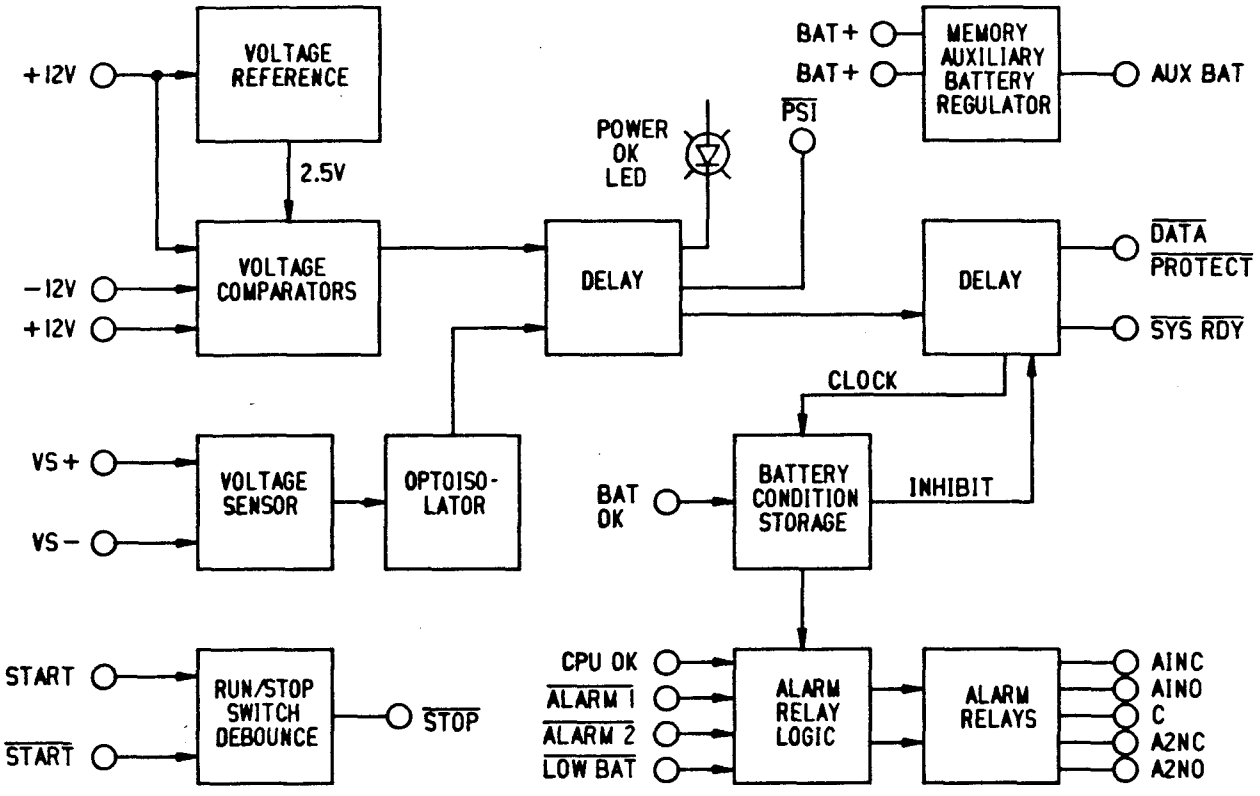

Figure 2.8 AUXILIARY CIRCUIT BOARD BLOCK DIAGRAM

Artisan Technology Group - Quality Instrumentation ... Guaranteed | (888) 88-SOURCE | www.artisantg.com

I/O CONTROL MODULE

The purpose of the I/O Control module (catalog number IC6OOCB503) is to provide an interface between the CPU backplane bus and the main I/O bus. It is also the interface to and controls data transfers between the CPU and certain peripheral devices. Logic on **this module includes command, status, port select and data latches, a status multiplexer, and control and timing circuitry. The I/O Control module must always be placed in slot 1, which is adjacent to the power supply.**

User Connections

There are two 37-pin connectors located on the front of the module. The programming device for the Series Six Plus plugs into the top connector, which is labeled PP/DPU. The bottom connector, labeled I/O, provides the connection to the main I/O chain. The I/O Control module is connected through a parallel I/O cable to the top connector of an I/O Receiver or Advanced I/O Receiver located in the first I/O rack in a CPU station or Local I/O station. The last rack of a CPU I/O station can be located up to 50 feet from the I/O Control module.

If a Redundant Processor Unit (RPU) is to be included in the control system, the bottom connector of the I/O Control module is connected to the CPU1 or CPU2 connector on the RPU's CPU Switch module, depending on whether the CPU is the main or back-up CPU. The main CPU connects to the CPU1 connector and the back-up CPU connects to the CPU2 connector on the RPU. When an RPU is included in a system, the I/O chain (or chains) connects to the I/O Switch module in the RPU, rather then to the I/O Control module.

Status Indicators

There are 4 LED indicators on the front of the module, viewable through the lens on the faceplate. The LED indicators provide system status and are an aid to troubleshooting, should a problem occur.

Table 2.4 I/O CONTROL MODULE INDICATORS

INDICATOR	DEFINITION
CHAIN OK	ON when all stations in the main I/O chain have continuity and have received good output parity.
PARITY	ON when Input data parity is good.
ENABLED	ON when the CPU is in the RUN mode with outputs enabled.
DPU	ON when the optional Data Processor Unit is connected and operating properly.

NOTE

With no I/O chain connected to the I/O Control module, the I/O Terminator plug supplied with each CPU must be connected to the bottom connector in order to terminate the I/O chain.

Artisan Technology Group - Quality Instrumentation ... Guaranteed | (888) 88-SOURCE | www.artisantg.com

User Configurable Jumpers

There are three sets of jumpers located on the module which must be configured during installation. Two sets of these jumpers allow the option of selecting whether the CPU enters the STOP mode with Alarm 1 and 2 activated or with only Alarm 2 activated, if there is a communications window fault during execution of a DPREQ (Data Processor Request) or a SCREQ (Serial Communications Request) window sequence. The third set of jumpers allows selection of DPU present or not present. If DPU not present is selected, the Data Processor Widow portion of the CPU scan will be bypassed.

Figure 2.9 is an illustration of the I/O Control module with user items described in the preceding discussion identified. Installation instructions are provided in Chapter 3.

s6840158

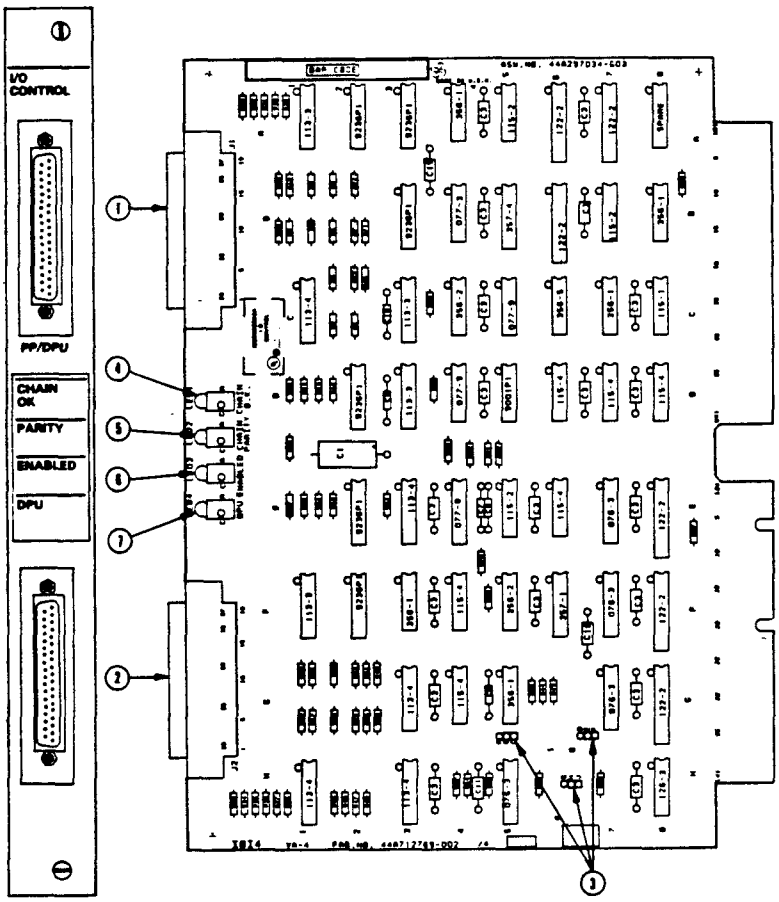

① D-Type 37-Pin Connector to Programmer.

② D-Type 37-Pin Connector to Primary I/O Chain Connects to I/O Receiver or Advanced I/O Receiver module in nearest I/O rack in primary chain.

③ User Selection Jumpers.

④ CHAIN OK Light

On: Continuity, power, and output-data parity are OK at all I/O stations in the primary chain.

Off: A continuity or power problem or output data parity error exists at one or more primary-chain I/O stations.

⑤ PARITY Light

On: Input-data parity is OK at the I/O Control module.

Off: Input-data parity error exists.

⑥ ENABLED Light

On: The outputs are enabled. CPU is operating in the RUN ENABLED mode.

Off: The outputs are disabled. CPU is in the RUN DISABLED or the STOP mode.

⑦ DPU Light

On: Data Processor is OK.

Off: A continuity error or other type of problem exists with the DPU.

Figure 2.9 I/O CONTROL MODULE

Artisan Technology Group - Quality Instrumentation ... Guaranteed | (888) 88-SOURCE | www.artisantg.com

LOGIC CONTROL MODULE

The Logic Control module contains the CPU system clock, a microprogram sequencer, and Programmable Read Only Memory (PROM). It provides timing and control signals to the CPU backplane for use by other modules, and microprogram instructions to the Arithmetic Control module through a ribbon cable. The time base for the timer functions in the PLC are derived from a crystal clock on this module. PROM memory on the module is programmed with an instruction set, which is accessed by the CPU when executing the user programmed instructions. The Logic Control module also contains circuitry which allows the CPU to access all 16K of Register memory.

Three versions of the Logic Control module are available, the difference being the level of the instruction set contained in each one. The Advanced Logic Control module (catalog number IC600CB525) contains instructions that are accessed by the CPU to allow execution of the basic and advanced functions. The Expanded Logic Control module (catalog number IC600CB526) contains instructions in PROM that are accessed by the CPU in order to execute the basic, advanced and expanded functions.

The Expanded II Logic Control module (catalog number IC600CB515) contains all of the instructions that are on the Expanded Logic control module. In addition it provides a dynamic user program memory checksum calculation for enhanced memory checking, has microcode changes to allow faster execution of ladder logic programs, contains new instructions for accessing a new 1/0 system to be available in the future, support of 64K user program, and Auxiliary I/O overrides.

The Logic Control module must be placed in slot 2, immediately to the left of the t/O Control module.

The Logic Control module works in conjunction with the Arithmetic Control module to generate timing and control signals and must be next to it in the rack, since they are linked together through a short length of ribbon cable. This short ribbon cable is included with the basic CPU rack.

NOTE

Do not attempt to operate the system without the ribbon cable connected between the Logic Control and Arithmetic Control modules. If the cable is not connected, the CPU will operate unpredictably.

The Logic Control module has no status indicators or other user accessible items. Figure 2.10 is an illustration of a Logic Control module.

NOTE

The Expanded II Functions require the IC600CB524 Arithmetic Control module, Logic Memory modules IC600LX (8K minimum registers), a 13" rack, or a 19" CPU rack with a date code later than 10/87.

Artisan Technology Group - Quality Instrumentation ... Guaranteed | (888) 88-SOURCE | www.artisantg.com

a40759

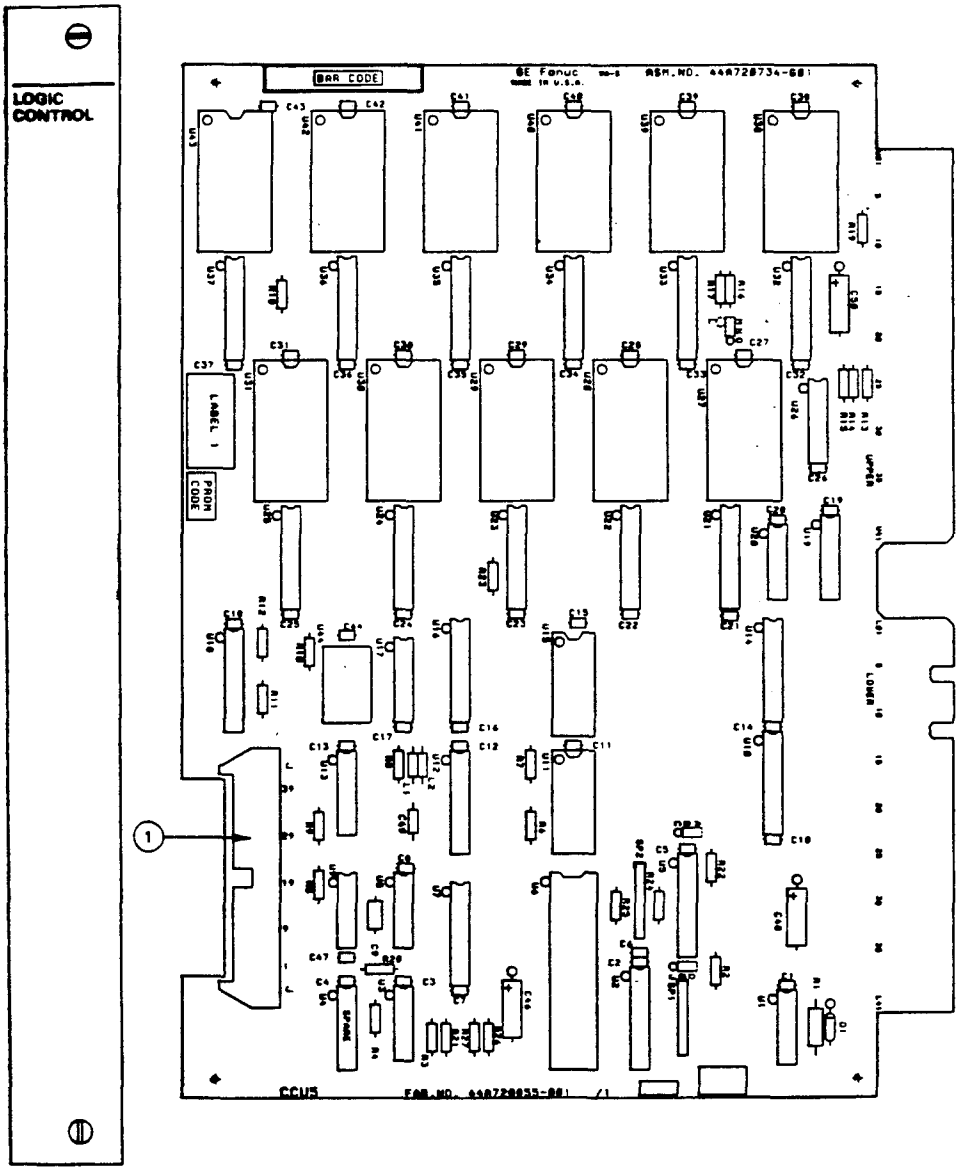

Expanded Logic Control Module

1. *Ribbon Cable Connector – Connects Logic Control Module to Arithmetic Control Module.*

Figure 2.10 EXAMPLE OF LOGIC CONTROL MODULE

Artisan Technology Group - Quality Instrumentation ... Guaranteed | (888) 88-SOURCE | www.artisantg.com

ARITHMETIC CONTROL MODULE

The Arithmetic Control module, catalog number IC600CB500, (IC600CB524 required with Expanded II functions) contains circuitry that performs arithmetic and logical operations on data and address lines. There are 4 hardware registers on the board. The continuity and buffer registers are each 1 bit wide, while the accumulate and preset registers are each 16 bits wide. These registers are operated on internally by the CPU and are not user accessible registers.

The primary hardware for performing the arithmetic and logic functions on this module is a 16 bit Arithmetic Logic Unit. The Arithmetic Logic Unit works in conjunction with the Logic Control module to generate timing and control signals and must be next to it in the rack, since they are linked together through a ribbon cable connector. The AM2903 is a 4 bit expandable bipolar microprocessor slice, which is especially useful for arithmetic oriented processors. In addition, it provides a special set of instructions that ease the implementation of multiplication, division, and other time consuming operations.

The Arithmetic Control module must be placed in slot 3 in the CPU rack, immediately to the left of the Logic Control module.

Status Indicators

There are 2 LED status indicators, labeled RUN and CHECK, on the front of the board which are viewable through the translucent lens on the faceplate. The executive routine in the scan execution sequence contains a self-test that is executed once per scan. The RUN LED, when ON, is an indication that the execution sequence is normal, the self-test has passed, the I/O scan is completed at least once every 300 ms +/-50 ms, and the CPU is in the RUN mode.

The CHECK LED is ON when the self-test has been completed successfully at least once each I/O scan, the system clock is operating normally, or if the scan time is no longer than 300 ms +/-50 ms.

Table 2.5 ARITHMETIC CONTROL MODULE STATUS INDICATORS

INDICATOR	DEFINITION
RUN	ON: Execution sequence proceeding normally, self-test has passed, the I/O scan is completed at least once every 300 ms +/-50 ms and the CPU is in the RUN mode. OFF: CPU is in the STOP mode.
CHECK	ON: Execution sequence proceeding normally, self-test has passed at least once each 300 ms +/-50 ms. CPU can be in RUN or STOP mode. OFF: CPU self-test has not passed within 300 ms +/-50 ms, or user program takes longer than 300 ms to execute. CPU goes to STOP mode and I/O chain is reset.

Artisan Technology Group - Quality Instrumentation ... Guaranteed | (888) 88-SOURCE | www.artisantg.com

NOTE

Do not attempt to operate the system without the ribbon cable connected between the Arithmetic Control and Logic Control modules. If the cable is not connected, the CPU will operate unpredictably.

Figure 2.11 is an illustration of the Arithmetic Control module with the user items discussed on the preceding page identified.

b42223

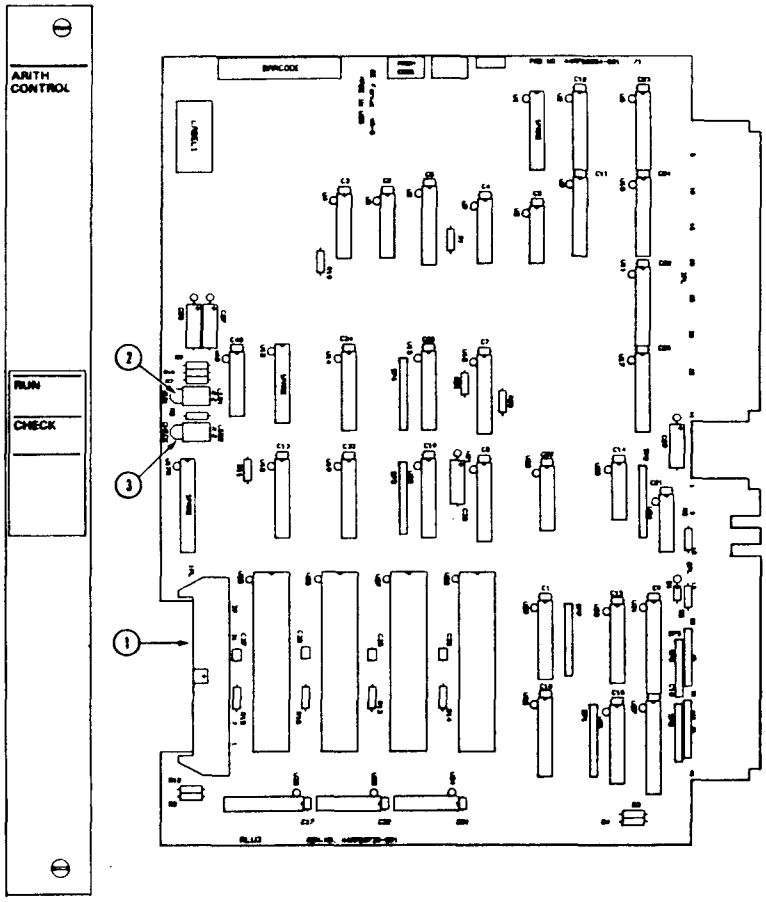

1. Socket for ribbon-cable connection to Logic Control module.

2. RUN Light

   On: CPU execution sequence is proceeding; the self test is passed and the I/O scan is completed at least once each 300 ms ±50 ms). CPU is in RUN mode.

   Off: CPU is in STOP mode.

3. CHECK Light

   On: CPU execution sequence is proceeding; the self-test is passed at least once each 300 ms ±50 ms. CPU could be in RUN or STOP mode.

   Off: CPU self-test has not been passed within 300 ms ±50 ms, or user program takes longer than 300 ms to execute. CPU goes to STOP mode; I/O chain is reset.

Figure 2.11 ARITHMETIC CONTROL MODULE

Artisan Technology Group - Quality Instrumentation ... Guaranteed | (888) 88-SOURCE | www.artisantg.com

COMBINED MEMORY MODULE

All of the Series Six Plus PLC memory configuration, including Internal, Register and Logic (user) memory, is located on the combined memory module. This module contains circuitry to perform memory parity checking, in order to ensure the integrity of the 16-bit memory words in the Series Six Plus rack. This module may be used in a model 60 CPU rack, but the parity checking does not function. The combined memory module is available in 6 versions, which are 5K, 12K, 16K, 24K, 48K, and 80K modules as shown in table 2.6. In addition, the existing combined memory modules for the Series Six PLC model 60 can be used in a Series Six Plus PLC. The faceplate for this module is labeled **LOGIC MEMORY**.

Table 2.6 COMBINED MEMORY MODULES

TOTAL MEMORY	CATALOG NUMBER (1)	LOGIC MEMORY	REGISTER MEMORY
5K	IC600LX605	4K	1K
12K	IC600LX612	4K	8K
16K	IC600LX616	8K	8K
24K	IC600LX624	16K	8K
48K	IC600LX648	32K	16K
80K	IC600LX680	64K	16K

(1) These memory modules are required with the Expanded II function set.

Logic Memory Function

The Logic Memory portion of the combined memory module stores the user entered program, which consists of ladder diagram logic and mnemonic instructions. Logic Memory is made up of 16-bit words each with 2 parity bits as illustrated below.

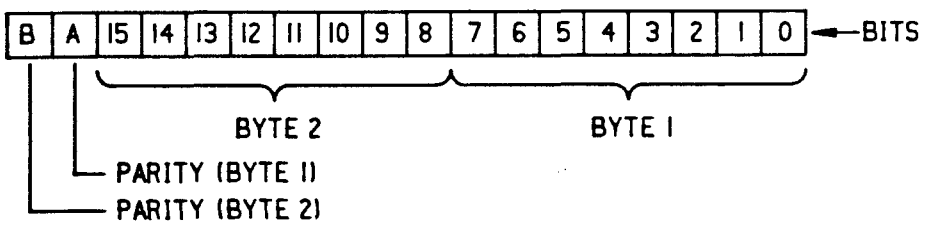

7055

Figure 2.12 BASIC WORD STRUCTURE

Register Memory Function

The Register Memory portion of the Combined Memory is a 16-bit user accessible storage area of memory used for data storage and for data (bit) manipulation by many mnemonic functions. The status of the I/O points, when in the expanded mode, is stored in Register Memory. This memory is available with 1K, 8K, or 16K words of CMOS memory storage locations. Many registers have special significance to system operation. Register memory also has a 2 parity bits. Refer to Chapter 4 for a description of Register Memory mapping.

Internal Memory Function

The Internal Memory portion of the Combined Memory module contains data stored in Table and Scratch Pad formats. The tables stored in internal memory include status, transition, and override.

Artisan Technology Group - Quality Instrumentation ... Guaranteed | (888) 88-SOURCE | www.artisantg.com

The status table stores bits representing the ON or OFF status of the 1000 inputs and 1000 outputs in the main I/O chain when in Normal mode. In the Expanded mode of operation, the status table stores the status bits of the 1000 inputs and 1000 outputs in the main I/O chain from a programming standpoint, but in Channel 0 from a real I/O point-of-view. The transition table stores the logic state of the inputs to counters and one-shots in the main I/O chain when in the Normal mode or for Channel 0, when in the Expanded mode. The override table stores the status of overridden input or output bits in both the Main and Auxiliary I/O chains in the Normal mode. An overridden bit in the status table is not changed when the CPU reads inputs or solves outputs. The internal memory is stored as 8 bits of data and 1 bit of parity.

Detection of Active Overrides in System

With the Expanded II functions, a means of detecting if there are any active overrides in the system is available. Two bits in the Main status table are used for this purpose. Output O1015 is defined as the Override Active in System Enable bit and O1016 is defined as the Override Active in System Report bit. Once each sweep O1015 will be checked by the CPU. tf the bit is not set to a 1, the CPU will skip the active Override search. If the bit is set, the CPU will initiate a search of the Main and Auxiliary Override Tables in search of an active override bit (bit that has been set to a "1"). The search will continue until either an active override is found or the end of the override tables is reached. If an active override is found, bit O1016 will be turned ON (the user can check O1016 for a "1" or a "0" to determine if there are any active overrides in the system). If the end of the override tables is reached without finding an active override, O1016 will be turned OFF. If O1015 is turned OFF, then O1016 will not be modified.

Scratch Pad Items

The Scratch Pad storage area contains miscellaneous data pertaining to CPU operation. The Scratch Pad display, as viewed on the Workmaster computer, includes these items and the current status of each one. Some of the items can be changed by the user, others are configured by the CPU and cannot be altered by the user.

Table 2.7 SCRATCH PAD STORAGE ITEMS

ITEM	DESCRIPTION
CPU ID	A number assigned to the CPU when there is more than one CPU in a communications system
MEMORY SIZE	Number of words of logic memory in the CPU.
CPUMEMORY	State of the Memory Protect key switch on the CPU.
SUBROUTINES USED	Number of subroutines in the user's program.
CPU STATUS	Current operating status of the CPU, either run enabled, run disabled or stop.
FUNCTIONS	Level of the instruction set resident in the CPU either Advanced, Expanded, or Expanded II.
WORDS USED	Length of current user program in 16-bit words.
WORDS AVAILABLE	Number of unused 16-bit words left in user memory.
REGISTERS	Number of 16-bit Register memory locations in CPU.
CPU VERSION	Revision level of the CPU software.
CPU ERROR FLAGS	A group of 24 bits in Scratch Pad memory used by the CPU to indicate the type and location of faults detected by the CPU during its normal operation or self checking.

Artisan Technology Group - Quality Instrumentation ... Guaranteed | (888) 88-SOURCE | www.artisantg.com

Type of Memory Used

The Combined Memory modules use CMOS-RAM integrated circuit memory as the storage devices. CMOS-RAM is an integrated circuit memory that uses low power. CMOS-RAM memory is volatile, i.e, its contents are lost under no-power conditions. In order to maintain the contents of memory when power fails or is turned off, a Lithium-Manganese Dioxide battery (usually referred to as a Lithium battery) is provided as a power back-up for these devices. The Lithium battery is located on the module, along with circuitry to monitor the batteries voltage level.

Battery Status Indicator

The Lithium battery (catalog number IC600MA507) provides about 1 year of data protection under no-power conditions. One of the 2 LEDs on the board is an indication of the battery condition. This LED is labeled, BATTERY. With power applied to the CPU, the LED w ill be ON, if the battery condition is normal. The normal fully-charged voltage of a Lithium battery is 2.95 V dc @ 1 .00 amp-hours.

If the battery voltage is low (between 2.55 V and 2.75 V), the LED will flash. When this happens, the battery should be replaced as soon as possible. The CPU will continue running if the battery voltage is low. If the CPU stops, it can be restarted. If the battery voltage drops below 2.55 V, the LED will turn OFF. If the CPU stops, it cannot be restarted under this condition. Instructions for replacing a defective battery can be found in Chapter 5, System Maintenance.

Table 2.8 COMBINED MEMORY MODULE STATUS INDICATORS

INDICATOR	STATUS	DEFINITION
BATTERY	UN	Condition of Lithium backup battery is normal.
	FLASHING	Battery voltage is low. CPU continues running. Alarm 2 (Advisory) is activated. To protect the memory contents, replace the battery as soon as possible - before It fails.
	OFF	Battery failed. CPU continues running, but will not restart if stopped. Alarm 2 remains activated. Contents of memory wfll be lost if power Is turned off or lost for any reason.
PARITY	ON	Normal operation, no parity errors detected by CPU.
	OFF	Parity error detected in either Logic, Register, or Internal memory. A bit will be set in the CPU Error Flag and displayed on the Workmaster computer screen in the Scratch Pad display An error message will be displayed which will interpret the content of the error flags. An address will be displayed in Hexadecimal format to pinpoint the location of the defective module.

Artisan Technology Group - Quality Instrumentation ... Guaranteed | (888) 88-SOURCE | www.artisantg.com

A jumper on the Combined Memory Module allows the user to use an external auxiliary backup battery connected to the terminal block. With the external battery configuration, the on-board battery need not be connected.

Location in Rack

The Combined Memory Module must be placed in slot 4, which is directly to the left of the Arithmetic Control Module in the Series Six Plus CPU rack.

NOTE

Existing versions of the Series Six PLC Combined Memory module (catalog numbers IC600CM552 and IC600CM554) can be used in a Series Six Plus CPU rack. Additionally, all Series Six Plus PLC Combined Memory modules can be used with a Series Six PLC model 60 CPU, however, there is no parity check with this combination.

Precautions When Handling Memory Modules

When installing or removing a Combined Memory module, it is recommended that you use the extraction/insertion tool (IC600MA504) provided with each CPU.

CAUTION

Relatively small amounts of excess charge can cause very intense electrostatic fields in Metal-Oxide-Semiconductor (MOS) devices, damaging their gate structure. Avoid handling the circuit board under conditions favoring build-up of static electricity. Failure to observe this caution could result in destruction of the CMOS-RAM devices in this module.

A bottom board cover provided with each Combined Memory module acts as an electrical noise shield and helps protect the battery circuits from accidental discharge. This cover should not be removed during operation or handling of the board.

CAUTION

Do not allow the bottom of the module to come in contact with a conductive (metal) surface when the board cover is removed. Failure to observe this caution could result in the discharge of the non-rechargeable lithium battery and the loss of memory contents.

Memory Protection

A two-position key switch located on the power supply is provided for protecting logic and override memory that has been written into. The two positions are MEMORY PROTECT and WRITE. In the WRITE position, the user can write into logic memory to enter or change programs. When in the MEMORY PROTECT position, logic memory cannot be written into, thereby protecting any user program previously entered from being changed or destroyed. Once a program has been entered and debugged, it is advisable to place the key switch in the MEMORY PROTECT position.

Artisan Technology Group - Quality Instrumentation ... Guaranteed | (888) 88-SOURCE | www.artisantg.com

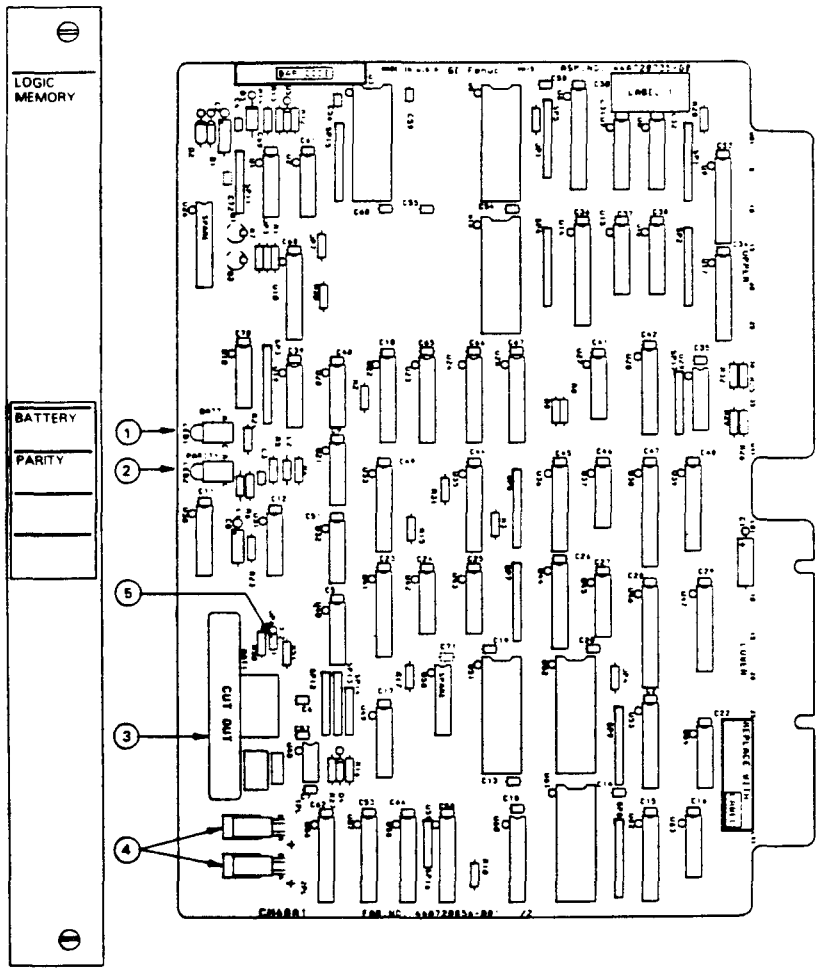

1. **BATTERY** Light

   Steady On: Battery Normal

   Flashing: Battery Low – The CPU continues running. No. 2 (advisory) alarm is activated. To protect the memory contents, replace the battery before it fails. When the light begins to flash, battery failure will occur in approximately 30 days.

   Steady Off: Battery Failed – CPU continues running, but will not restart if stopped. No. 2 alarm remains activated. Memory contents will be lost when power is switched off or lost.

2. **PARITY** Light

   On: Table Memory, Register Memory and Logic Memory Parity is OK.

   Off: Table Memory, Register Memory or Logic Memory parity error exists or board is in a model 60 rack. An error message appears on the Workmaster computer display or in the work area of the Program Development Terminal display.

3. Lithium-Manganese Dioxide Battery.

4. Battery Connectors.

5. External Auxiliary Battery Select

Figure 2.13 TYPICAL COMBINED (LOGIC) MEMORY MODULE

Artisan Technology Group - Quality Instrumentation ... Guaranteed | (888) 88-SOURCE | www.artisantg.com

BUS CONTROLLER MODULE

The Bus Controller module is the required interface between a Series Six Plus PLC and the Genius I/O blocks when they are included in the PLC's I/O system. The Bus Controller module can be placed in any I/O slot in the CPU or in a high-capacity I/O rack located in a CPU station or local I/O station up to 2000 feet (600 meters) from the CPU. Multiple Bus Controllers can be placed in one rack. Since each Bus Controller consumes 20 units of load, up to 5 modules can be placed in a CPU rack, or modules in a high capacity I/O rack.

A Bus Controller can be placed in an I/O rack in a Remote I/O station if the CPU scan time is greater than 10 ms. However, because of the reduced capacity of the serial I/O communications link, window commands would not be supported. Each Bus Controller can interface up to 30 Genius I/O blocks to the Series Six Plus CPU by twisted pair communications up to 2000 feet 600 meters). The only limit to the number of Bus Controllers in any one PLC system is the I/O capacity of the Series Six Plus CPU. Each Bus Controller, similar to any I/O module, has access to all I/O references on its I/O chain.

A 4-segment DIP switch located on the module is used to enable channel selection for Expanded I/O addressing. If Normal (non-expanded) addressing is used or if channel selection is made through I/O Transmitter Modules, no switch setting is necessary.

The Genius I/O bus must be terminated at the Bus Controller by its characteristic impedance. The enhanced version Bus Controller provides three selectable on-board impedances, 100 150 or 750 Ohms Three jumpers (JP1, JP2, and JP3) on the module are used to select one of the listed values, or to select no impedance.

Versions of Bus Controller

Two versions of the Bus Controller are available, they are:

1. Catalog Number IC660CBB901 (IC660CBB903 has enhanced features). Interfaces with the Genius I/O blocks and provides normal Genius I/O status information and Hand Held Monitor support. It requires one byte of input address (8 references) for transfer of its status to the CPU.

2, Catalog Number IC660CBB900 (IC660CBB902 has enhanced features). Provides all functions of the IC660CBB901 Bus Controller plus a wide range of diagnostic data and system functions for the entire Genius I/O system. This Bus Controller requires 6 addresses for diagnostic input data (48 references) provided to the CPU and 4 addresses for command output data (32 references) received from the CPU. Addresses are selected by the DIP switches at the rear of each I/O slot.

For detailed information on the Bus Controller modules, refer to the Genius I/O System User's Manual, GEK-90466.

Artisan Technology Group - Quality Instrumentation ... Guaranteed | (888) 88-SOURCE | www.artisantg.com

COMMUNICATIONS CONTROL MODULES

The Communications Control Modules (CCM2, CCM3, I/O CCM, I/O Link local) provide a serial interface between the Series Six Plus PLC and any intelligent device that can initiate communications based on the CCM protocol and CCM electrical interface requirements. A brief description of each of these modules is provided in this manual. For detailed descriptions of these modules and pertinent data communications information, refer to GEK-25364, which is the Series Six Data Communications Manual, GEK-90505, which is the Supplement To The Data Communications Manual, and GEK-90824, which is the data sheet for the Input/Output Communications Control Module.

Communications Control Module, Type 2 (CCM2)

The CCM2 (catalog number IC600CB516) has 2 serial ports that provide RS-232 and RS-422 electrical interface capability. RS-232 is normally used for direct connections at a maximum distance of 50 feet (15 meters). The RS-422 interface allows direct connection up to 4000 feet (1200 meters). The CCM2 can be connected directly to short haul or telephone line modems through the RS-232 interface, if transmission distances greater than the 4000 feet allowed by RS-422 are required. The CCM2 can operate at speeds up to 38.4K baud, and can originate messages with control by the ladder diagram logic, using the Serial Communications Request (SCREQ).

Examples of intelligent devices that can be interfaced to the CCM2 include:

- Communications Control Module, Type 3 (CCM3)
- A host computer or microprocessor based devices
- Color-graphics terminals
- GEnet Factory LAN

The CCM2 also provides an interface to the following devices:

- A STR-LINK IIA or STR-LINK III tape recorder. These recorders are used to facilitate recording or loading of CPU user's programs at the Series Six Plus PLC location. The STR-LINK III tapes are interchangeable with PDT tapes.
- A handheld Operator Interface Unit (OIU), which allows an operator to monitor and modify the register contents of the CPU, monitor and modify timers and counters, and monitor, modify, and override Input and Output (I/O) points.
- A dumb terminal or printer

The CCM2 is capable of initiating data transfers to and from any Series Six Plus PLC memory type, including register tables, input and output tables, override tables, scratch pad, and user logic. When a Series Six Plus CPU is connected through a CCM2 to a host computer or other device that is not a Series Six Plus PLC, the user must either write or purchase the software necessary to communicate with the CCM2.

STR is a trademark of Electronic Processors, Inc.

Artisan Technology Group - Quality Instrumentation ... Guaranteed | (888) 88-SOURCE | www.artisantg.com

System Configuration

Three types of system configurations are supported by the CCM2: point-to-point, multidrop, and GEnet . A point-to-point configuration allows only two elements to be connected to the same communications line. Using this configuration, the CCM2 protocol allows either peer-to-peer or master-slave communications. In the multi-drop configuration, one CCM2 or host device is configured as the master and one or more CCM2s are configured as slaves; only the master-slave protocol can be used. The GEnet Factory LAN (Local Area Network) is a Local Area Network through which many devices can be connected. A Bus Interface Unit (BIU) allows Series Six Plus PLCs to access the GEnet Factory LAN, and can support a maximum of 4 CCM2s. By using multiple BIUs, a maximum of 254 Series Six Plus PLCs with CCM2s can be connected to the network.

User Items

The CCM2 requires 1 slot in the Series Six Plus PLC rack, and must be installed in slot 5. At the top of the module are 2 switches used during communications with a STR-LINK IIA or STR-LINK III tape recorder. The 2 connectors on the board are both capable of RS-232 and RS-422 operation. J1 is a 25-pin "D" type female connector and J2 is a 9-pin "D" type female connector. If a STR-LINK tape recorder is to be used, it must be connected to the J1 connector. Four LEDs on the board, viewable through the faceplate lens, are indicators of the operating state of the module. Table 2.9 is a description of the indicators. Figure 2.14 is an illustration of the CCM2 module.

Table 2.9 CCM2 STATUS INDICATOR DEFINITIONS

INDICATOR	STATUS	DEFINITION
BOARD OK	ON	Board has passed power-up test and is operating properly.
	FLASHING	Invalid configuration or CPU number.
	OFF	Power-up test failed, indicating a hardware failure.
MATCH OK	ON	Good compare between tape and CPU has been made.
	OFF	Compare of tape with CPU Memory has failed. TAPE OK Indicator also turns off.
DATA OK	ON	Data transmission normal.
	FLASHING	Data is being transferred.
	OFF	Data incorrect because of parity, overrun or framing errors, bad data block or the serial link has timed out. A CCM2/CPU communications failure will cause this light and the BOARD OK light to turn off.
TAPE OK	ON	Tape data transmission normal.
	OFF	Data stream interruption caused by parity, framing or overrun errors, unsuccessful tape comparison or timeout on the tape link.

Artisan Technology Group - Quality Instrumentation ... Guaranteed | (888) 88-SOURCE | www.artisantg.com

GEK-96602

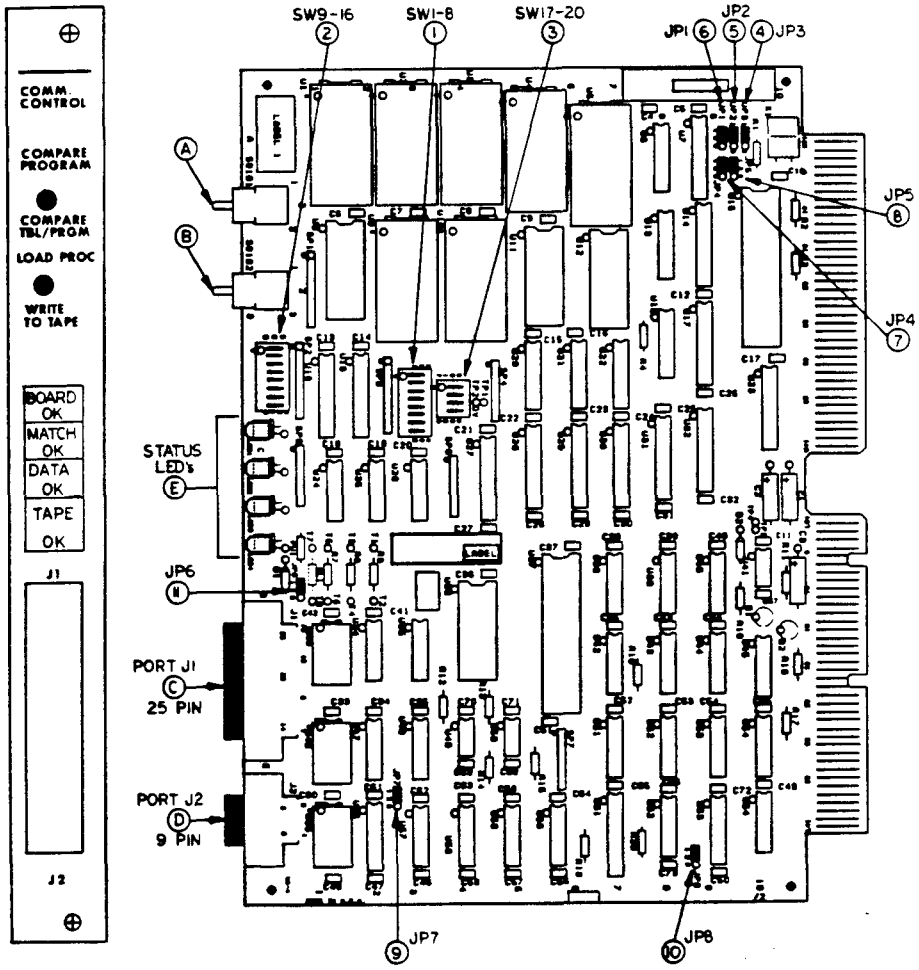

A. Single Pole/Double Throw/Center Off switch (momentary contact): UP position compare tape with CPU user program. DOWN position compare tape with user program and tables.

B. Single Pole/Double Throw/Center Off switch (momentary contact): UP position initiates loading of tape into CPU; DOWN position initiates writing of data from CPU to tape.

C. J1 Connector: 25-pin "D" type female connector for RS-232 and RS-422.

D. J2 Connector: 9-pin "D" type female connector for RS-422 and RS-232.

E. LED Indicators 1 to 4.

1. DIP switch 1 to 8: Configuration selection for port J2.

2. DIP Switches 9 to 16: Configuration selection for port J1.

3. DIP Switches 17 to 20: Miscellaneous selection.

4. Jumper JP3: Always set in 1-2 position.

5. Jumper JP2: Always set in 1-2 position.

6. Jumper JP1: Always set in 1-2 position.

7. Jumper JP4: 1-2 position, OIU DISABLE; 2-3 position, OIU ENABLE.

8. Jumper JP5: Always set in 1-2 position.

9. Jumper JP7: Always set in 1-2 position.

10. Jumper JP8: Always set in 1-2 position.

11. Jumper JP6: 1-2 position, disconnects +5 V from pin 20; 2-3 position, connects +5 V to pin 20 of port J1.

Figure 2.14 ILLUSTRATION OF CCM2 MODULE

Artisan Technology Group - Quality Instrumentation ... Guaranteed | (888) 88-SOURCE | www.artisantg.com

Communications Control Module, Type 3 (CCM3)

The CCM3 (catalog number IC600CB517) provides all of the functions of the CCM2plus the protocol required to communicate with selected process control systems. Physically, the CCM3 is similar to the CCM2. Refer to the illustration, figure 2.14, on the preceding page. Options for baud rate, protocol, turn-around-delay, and parity can be selected for the CCM3 in the same manner as with the CCM2, by hardware, using DIP switches and by software, using configuration registers. The primary difference between the two modules is in the software, which for the CCM3 includes 2 modes of operation: CCM2 mode and CCM3 Remote Terminal Unit (RTU) mode. Information on the installation, operation, and protocol of the CCM3 can be found in GEK-90505, which is the Supplement To The Data Communications Manual.

CCM2 Mode

When the CCM3 is in the CCM2 mode, the CCM3 operates the same as the CCM2 module, except that the following protocol options of the CCM2 are not available to the CCM3:

- RS-422 with clock on port J1
- Test 1 on port J2

This is because the DIP switch settings and the bit pattern for the software configuration registers, which are on the actual CCM2 are used to select the options listed above, are reserved on the CCM3 to select RTU mode for ports J1 and J2 If any protocol selection for a CCM3 port is made other than RTU, that port will operate as a CCM2. When configuring the CCM3 in CCM2 mode, follow the directions found in Chapter 3, Communications Control Module (CCM2) in GEK-25364, which is the Series Six Data Communications Manual.

CCM3 Remote Terminal Unit (RTU) Mode

In RTU mode, the CCM3 is a slave device designed to be used on a link with a host computer or other intelligent device capable of emulating RTU master protocol. When using this mode, the CCM3 is capable of accessing the following Series Six Plus PLC memory types: register tables, input and output tables, override tables, scratch pad and user logic.

In addition, several Serial Communications REQuests which do not use RTU protocol, the unformatted Write and Read Character String commands, can be initiated by application programming when in RTU mode. These communications requests are included in CCM3 (RTU) software for application programming.

Dual Mode Usage

One CCM3 communications port can be configured in CCM2 mode at the same time that the other port is configured in RTU mode. Restrictions regarding the use of two ports in different modes are given in the section, Simultaneous Port Operations, in the CCM3 Supplement, GEK-90505.

Artisan Technology Group - Quality Instrumentation ... Guaranteed | (888) 88-SOURCE | www.artisantg.com

I/O Communications Control Module (I/O CCM)

The I/O CCM (catalog number IC600BF948) is a communications module for use as an additional communications interface between the CPU in a Series Six Plus PLC and external devices. The I/O CCM should be used when the primary communications module (CCM2 or CCM3) has both ports committed and additional ports are required for an application.

The I/O CCM has two ports, labeled PORT 1 and PORT 2, for asynchronous serial communication at data rates from 300 to 19.2K baud using CCM (master, slave, or peer) or RTU (slave only) protocol. Unformatted read and write can also be used. Both ports support RS-232 and RS-422. In addition, Port 1 also supports active or passive 20 mA current loop. The two ports can be independently configured by module hardware.

The I/O CCM does not support STR-LINK tape recorders, the Operator Interface Unit, or port configuration from registers. However, it can interface to most other devices and perform the same tasks as the CCM2 and CCM3 modules. The I/O CCM must be inserted in a high capacity I/O rack or an I/O slot in a Series Six Plus CPU rack.

Detailed information on the I/O CCM can be found in GEK-90824, which is the data sheet for the Input/Output Communications Control Module. Figure 2.15 is an illustration of the I/O CCM.

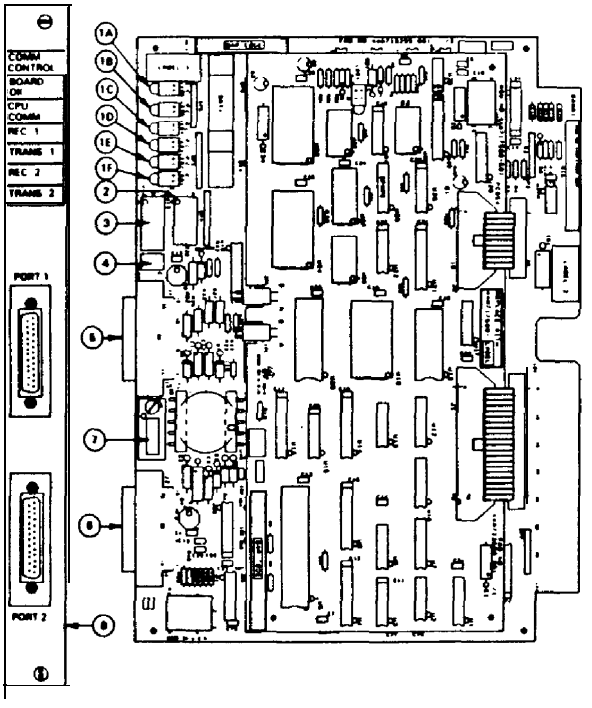

1. LED Status Indicators.
2. Bank A DIP Switches.
3. Bank B DIP Switches.
4. Bank C DIP Switches.
5. J1 Connector: 25pin D-type female connector (Communications Port 1).
6. J2 Connector: 25pin D-type female connector (Communications Port 2).
7. J2 Communication selection DIP package: RS-232 or RS-422 configuration. Read from top of imprinted label.
8. Faceplate.

Figure 2.15 ILLUSTRATION OF I/O CCM MODULE

Artisan Technology Group - Quality Instrumentation ... Guaranteed | (888) 88-SOURCE | www.artisantg.com

I/O Link Local Module

The I/O Link Local module (catalog number IC600BF947) provides a communication link with diagnostics from a Series Six Plus PLC to a slave Series One PLC and Series Three PLC input and output devices. The I/O_Link Local module can be connected to as many as seven remote Series One or Series Three racks (or a combination of both) in a single chain. It can access a maximum of 96 I/O points from a Series One rack and 224 I/O points from each Series Three rack.

The I/O Link Local module can be inserted in the I/O portion of a Series Six Plus CPU rack or in a Series Six high capacity I/O rack. The connection to the Series One or Series Three I/O is made through the I/O Link Remote module in a Series One or Series Three I/O rack.

A maximum of 4 I/O Link Local modules can be installed in the I/O portion of the CPU rack. With this configuration, no other I/O modules can be resident in the CPU rack. This is because of the power consumption (in units of load) of the I/O Link Local modules. A maximum of 5 I/O Link Local module can be installed in a high capacity I/O rack. In this configuration, there are 175 units of load remaining for I/O modules with +5 V dc power only.

The actual physical connection between the I/O Link Local module and the remote Series One or Three racks is a 2-wire (plus ground) RS-422 multidrop. The maximum distance between the I/O Link Local module and the last remote rack in the chain is 3300 ft (1 km).

The I/O Link Local module must be configured for each application by setting DIP switches located on the module. The DIP switches determine the starting address of a configuration table in the CPU.

For detailed information on the use and configuration of an I/O system using the I/O Link Local module and Series One or Three I/O, refer to GEK-90825, which is the Series Six PLC I/O Link Local User's Manual. Figure 2.16 is an illustration of a typical I/O communications link between a Series Six Plus PLC and Series One and Three I/O.

a42084

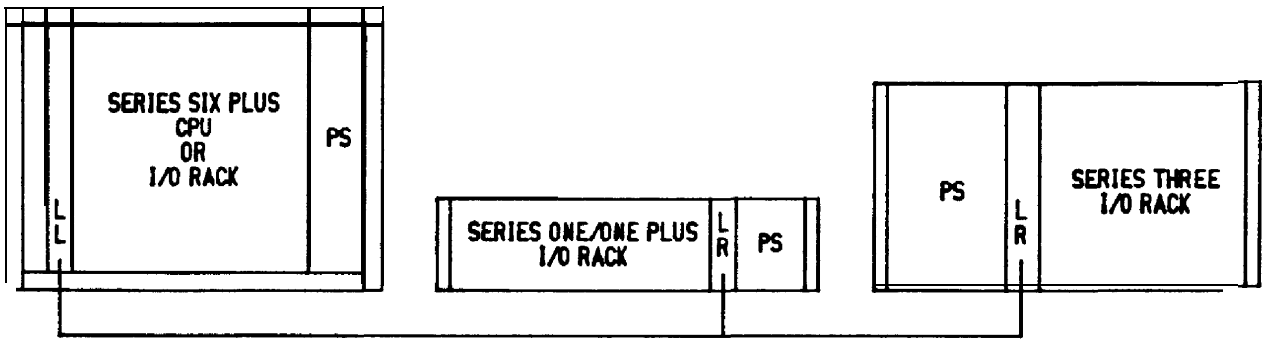

Figure 2.16 I/O LINK LOCAL MODULE TO SERIES ONE OR SERIES THREE REMOTE I/O RACKS

Artisan Technology Group - Quality Instrumentation ... Guaranteed | (888) 88-SOURCE | www.artisantg.com

Figure 2.17 is an illustration of the physical layout of the I/O Link Local module.

a4047 7

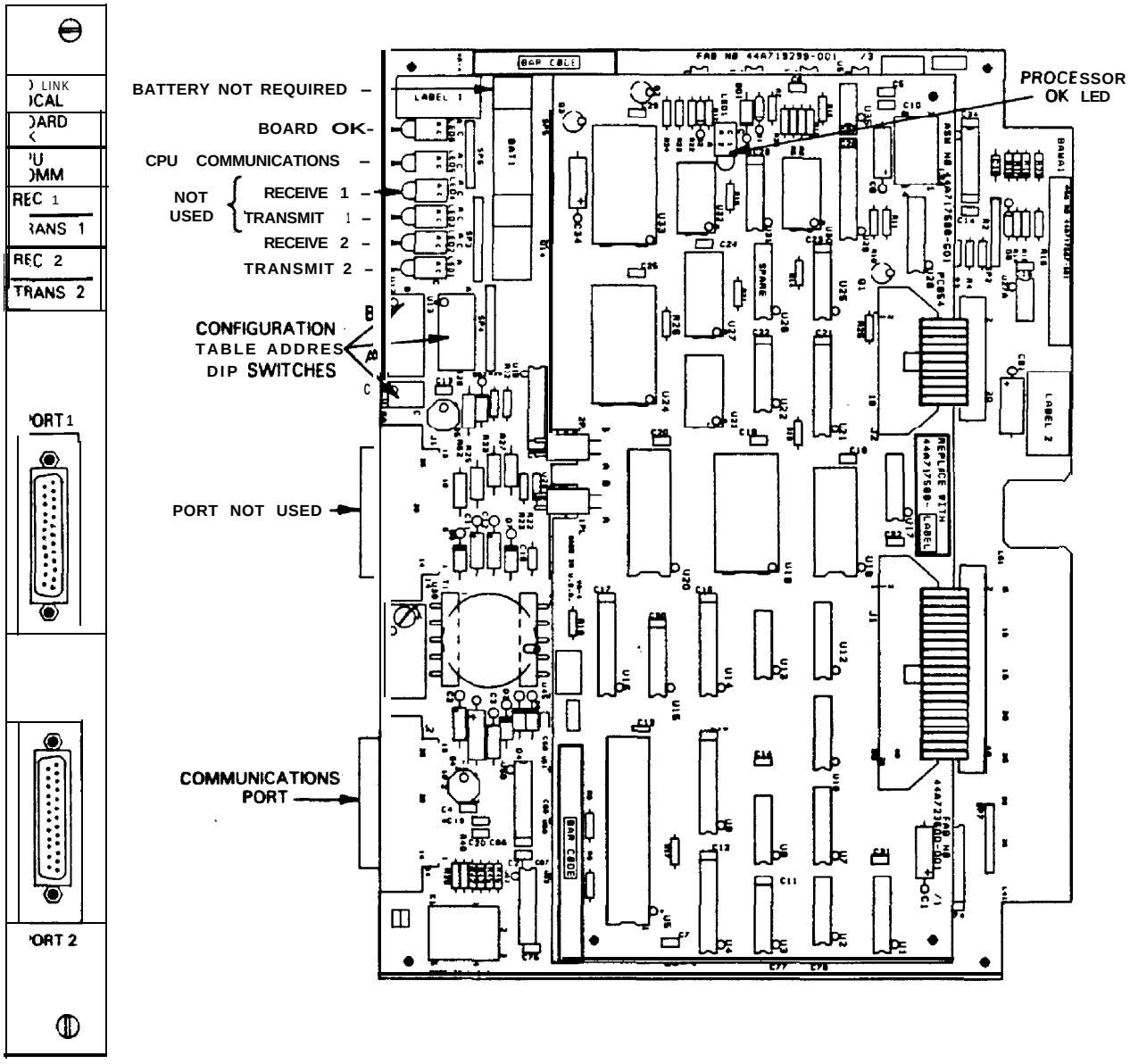

Figure 2.17 I/O LINK LOCAL MODULE

Artisan Technology Group - Quality Instrumentation ... Guaranteed | (888) 88-SOURCE | www.artisantg.com

I/O STRUCTURE FOR THE SERIES SIX PLUS PLC

The I/O structure for the Series Six Plus PLC provides the user with many options of system configurations and a large variety of discrete and special I/O modules designed to fit the needs of virtually any application. Any of the rack-based Series Six I/O modules can be used in a Series Six Plus PLC system and can be placed anywhere within the I/O structure, except that devices such as the ASCII/BASIC module requiring windows from the CPU cannot be used in Remote I/O stations. The 19" CPU rack has 6 slots in which I/O modules may be placed and the 13" rack has 3 slots for I/O modules. When an application requires more I/O than can be contained in the CPU rack, an optional I/O rack or racks can be added. This allows a system to use the maximum I/O points available in a configuration.

I/O RACKS

All I/O modules, other than those in the CPU rack, are housed in an I/O rack. The I/O rack uses the same mechanical packaging as the CPU rack and is available in both 13" and 19" racks. The I/O racks can be mounted in the same manner as the CPU racks and can be either rack or panel mounted. Two 13" racks can be mounted side-by side in a NEMA 12 wide rack. Each rack is supplied with reversible mounting brackets for mounting as required by the user. With the brackets attached to the front of the rack, it can be mounted in a standard 19" or 13" rack, as applicable. By rotating the brackets 90" and mounting them on the rear of the rack, the rack can then be wall or panel mounted.

81pc51

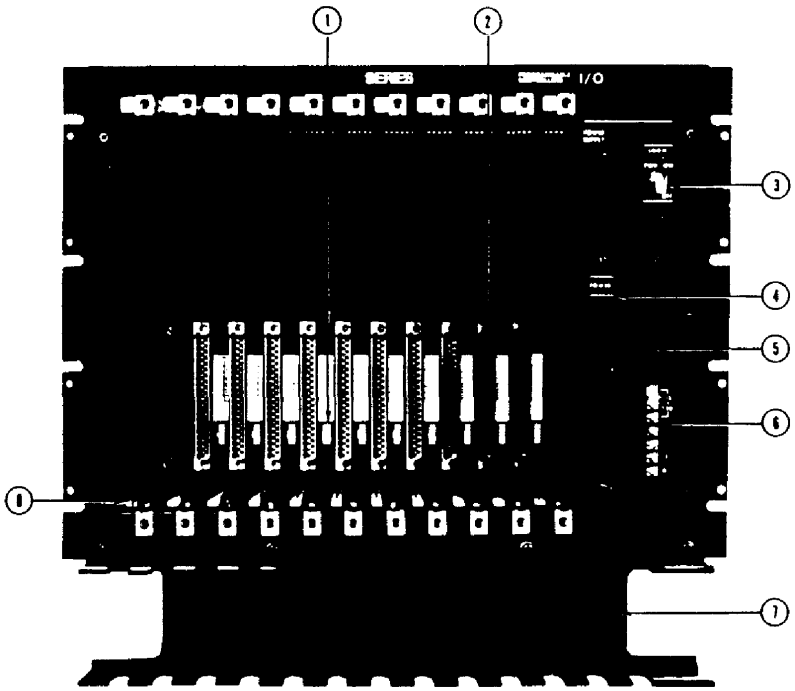

1. 7 Position DIP Switch (10 Per Rack).
2. 41-Pin Connector (11 Per Rack).
3. Logic Power On/Off Circuit Breaker.
4. Power On Indicator.
5. I/O Power Supply.
6. Terminal Board
7. Tray For Containing Field Wiring.
8. Cardguide (11 Per Rack).

Figure 2.18 TYPICAL I/O RACK

Artisan Technology Group - Quality Instrumentation ... Guaranteed | (888) 88-SOURCE | www.artisantg.com

Each I/O rack provides regulated dc power and backplane signals from the power supply for I/O modules, and is available in three versions: ac standard and ac or dc high-capacity (13" rack requires the high-capacity ac supply). The difference being the total current supplied from the power supply. A standard I/O rack provides adequate current for modules for most applications. When an application requires I/O modules that collectively would draw more than 6.1 amps, a high-capacity rack must be used.

Table 2.10 I/O RACK AND POWER SUPPLY SPECIFICATIONS

Rack Dimensions (19", 11 slots)	
Rack Mount	19.0(W) x 14.0(H) x 10.3(D) inches (483 x 356 x 261 millimeters
Panel Mount	20.0(W) x 14.0(H) x 10.3(D) inches 508 x 356 x 261 millimeters
Weight (Empty)	30 Pounds (13 Kg)
Rack Dimensions (13", 8 slots)	
Rack Mount	16.0(W) x 13.25(H) x 9.3(D) inches 406 x 337 x 236 millimeters
Rack Mount with Brackets for standard 19" Rack	19.0(W) x 13.25(D) x 9.3(D) inches 483 x 337 x 236 millimeters
Panel Mount (Brackets on sides)	16.0(W) x 13.25(H) x 9.3(D) inches
Panel Mount (Brackets on Top and Bottom, Side-By-Side Mount	13.25(W) x 16.1(H) x 9.3(D) inches 337 x 410 x 236 millimeters
Power Supply Input Requirements	
AC - Standard, IC600YR501	
Frequency	47 to 63 Hz
Voltage	95 - 132 V ac } Jumper 190 - 269 V ac } Selectable
Maximum load	80 VA
AC - High Capacity, IC600YR511	
Voltage and Maximum Load	95 - 260 V ac (Wide Range), 250 VA
DC - High Capacity, IC600YR514	
Voltage and Maximum Load	20 to 32 V dc, 180 VA
DC - High Capacity, IC600YR546	
Voltage and Maximum Load	100 to 150 V dc, 180 VA
Power Supply Voltages to Rack	
Standard (100 Units of Load) (1)	+5 V dc, 6.1 A (maximum)
High Capacity (275 Units of Load)	+5 V dc, 16.5 A (maximum) +12 V dc, 1.5 A (maximum) -12 V dc, 1.0 A (maximum)
Allowable Power Interruptions	AC: 33 mSec (min) - 115 V ac line DC: 10 mSec (min) - 20 V dc line 4 mSec (min) - 100 V dc line
Operating Temp. (Outside of Rack)	0 to 60°C (32F to 140" F)
Storage Temperature	-20 to +80C (-4 to 176°F)
Humidity (Non-Condensing)	5% to 95%
Noise Immunity	Meets requirements of NEMA ICS 2-230 and ANSI C37.90A
Altitude	Up to 10,000 Feet (3000 meters) above Sea Level

(1) 1 unit of load = 60 mA. Calculations based on worst case, all inputs or outputs on.

Artisan Technology Group - Quality Instrumentation ... Guaranteed | (888) 88-SOURCE | www.artisantg.com

I/O ADDRESSING

Every I/O module must be assigned a unique address to be used when referencing an input or output in the user program. Each I/O slot, except the leftmost slot, has a seven segment DIP (Dual In-line Package) switch associated with it, physically located on the backplane and adjacent to each slot (figure 2.18). These switches, when set, are used to assign a unique address for the Input or Output module placed in that slot. Note that each address can be used two times. since the same I/O point address can be assigned to 1 Input and 1 output module, i.e., I1+0157 and O1+0157. Either an Input or Output module can be placed in any of the 10 addressable slots. The leftmost slot is reserved for an I/O Receiver or Advanced I/O Receiver module, which is required in each I/O rack. Figure 2.19 is an illustration of the DIP switches, showing their location and individual switch values.

NOTE

When referencing an I/O point in a program, a prefix must be added to properly address the applicable I/O chain. Normal mode addresses reference the Main and Auxiliary I/O chains, for example I0234, AO0456, etc. When in the Expanded mode, Normal mode references address Expanded I/O channels 0 and 8, for example I0234, O0346, AI0222, AO0456, etc. Expanded mode references for channels 1 - 7 and 9 - F include the channel number, for example, I3+0101, O3+0101, IB+0234, OB+0567, etc. The individual module DIP switch settings for I/O points 1 to 1000 are the same for each chain or channel, only the prefix is different.

a42080

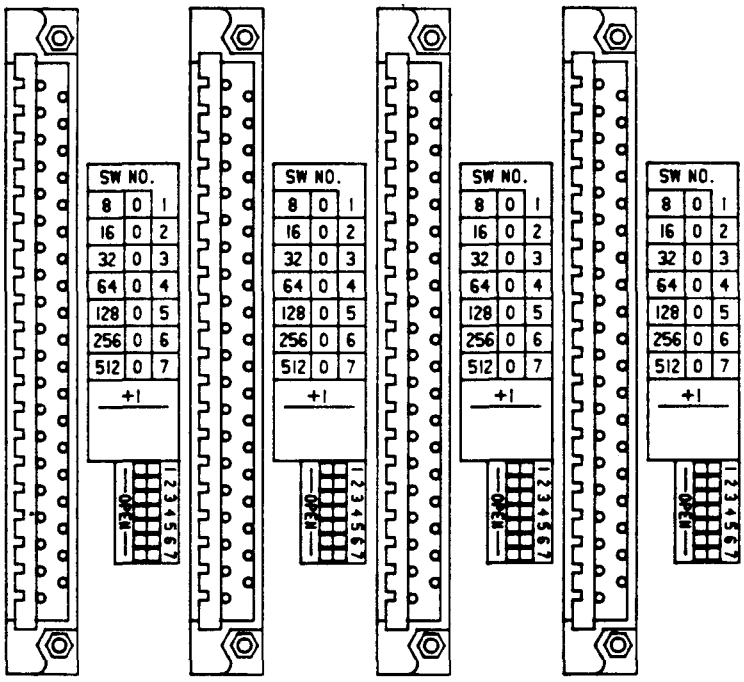

1. Seven Segment DIP Switches, One for Each I/O Slot

Figure 2.19 I/O POINT ADDRESS SWITCHES

Artisan Technology Group - Quality Instrumentation ... Guaranteed | (888) 88-SOURCE | www.artisantg.com

Figure 2.20 shows the DIP switch settings for I/O point selection for 8-circuit I/O modules.

7897

I/O POINT	DIP SWITCH POSITION 7	6	5	4	3	2	1	I/O POINT	DIP SWITCH POSITION 7	6	5	4	3	2	1	I/O POINT	DIP SWITCH POSITION 7	6	5	4	3	2	1
1-8								337-344		X		X		X		673-680	X		X		X		
9-16							X	345-352		X		X		X	X	681-688	X		X		X		X
17-24						X		353-360		X		X	X			689-696	X		X		X	X	
25-32						X	X	361-368		X		X	X		X	697-704	X		X		X	X	X
33-40					X			369-376		X		X	X	X		705-712	X		X	X			
41-48					X		X	377-384		X		X	X	X	X	713-720	X		X	X			X
49-56					X	X		385-392		X	X					721-728	X		X	X		X	
57-64					X	X	X	393-400		X	X				X	729-736	X		X	X		X	X
65-72				X				401-408		X	X			X		737-744	X		X	X	X		
73-80				X			X	409-416		X	X			X	X	745-752	X		X	X	X		X
81-88				X		X		417-424		X	X		X			753-760	X		X	X	X	X	
89-96				X		X	X	425-432		X	X		X		X	761-768	X		X	X	X	X	X
97-104				X	X			433-440		X	X		X	X		769-776	X	X					
105-112				X	X		X	441-448		X	X		X	X	X	777-784	X	X					X
113-120				X	X	X		449-456		X	X	X				785-792	X	X				X	
121-128				X	X	X	X	457-464		X	X	X			X	793-800	X	X				X	X
129-136			X					465-472		X	X	X		X		801-808	X	X			X		
137-144			X				X	473-480		X	X	X		X	X	809-816	X	X			X		X
145-152			X			X		481-488		X	X	X	X			817-824	X	X			X	X	
153-160			X			X	X	489-496		X	X	X	X		X	825-832	X	X			X	X	X
161-168			X		X			497-504		X	X	X	X	X		833-840	X	X		X			
169-176			X		X		X	505-512		X	X	X	X	X	X	841-848	X	X		X			X
177-184			X		X	X		513-520	X							849-856	X	X		X		X	
185-192			X		X	X	X	521-528	X						X	857-864	X	X		X		X	X
193-200			X	X				529-536	X					X		865-872	X	X		X	X		
201-208			X	X			X	537-544	X					X	X	873-880	X	X		X	X		X
209-216			X	X		X		545-552	X				X			881-888	X	X		X	X	X	
217-224			X	X		X	X	553-560	X				X		X	889-896	X	X		X	X	X	X
225-232			X	X	X			561-568	X				X	X		897-904	X	X	X				
233-240			X	X	X		X	569-576	X				X	X	X	905-912	X	X	X				X
241-248			X	X	X	X		577-584	X			X				913-920	X	X	X			X	
249-256			X	X	X	X	X	585-592	X			X			X	921-928	X	X	X			X	X
257-264		X						593-600	X			X		X		929-936	X	X	X		X		
265-272		X					X	601-608	X			X		X	X	937-944	X	X	X		X		X
273-280		X				X		609-616	X			X	X			945-952	X	X	X		X	X	
281-288		X				X	X	617-624	X			X	X		X	953-960	X	X	X		X	X	X
289-296		X			X			625-632	X			X	X	X		961-968	X	X	X	X			
297-304		X			X		X	633-640	X			X	X	X	X	969-976	X	X	X	X			X
305-312		X			X	X		641-648	X		X					977-984	X	X	X	X		X	
313-320		X			X	X	X	649-656	X		X				X	985-992	X	X	X	X		X	X
321-328		X		X				657-664	X		X			X		993-1000	X	X	X	X	X		
329-336		X		X			X	665-672	X		X			X	X								

X = Switch in OPEN Position (Depressed to the Left)

Figure 2.20 DIP SWITCH SETTINGS FOR 8-CIRCUIT MODULES

The I/O addresses are selected by positioning each of the seven rocker switches on a DIP switch package to either the open or closed position. To set a switch to the OPEN position, depress the rocker switch to the left. Each DIP switch setting allows the selection of a starting I/O point reference number and either 8, 16, or 32 consecutive I/O points. The number of consecutive I/O points is determined by the type of I/O module in the slot. Data sheets for modules using more than 8 I/O points include a similar table showing the settings required for that module.

Artisan Technology Group - Quality Instrumentation ... Guaranteed | (888) 88-SOURCE | www.artisantg.com

Normal Mode I/O Addressing

The Series Six Plus PLC allows I/O to be configured in either the Normal I/O mode or the Expanded I/O mode. Selection of the mode is made through the Configuration Menu screen, using Logicmaster 6 software. In the Normal I/O mode, one I/O chain per CPU is permitted (this is the factory default setting). In this mode, available I/O is 1000 Inputs/1000 Outputs in the Main I/O chain, plus an additional 1000 Inputs/1000 Outputs in the Auxiliary I/O chain, if an Auxiliary I/O module is included in the system.

The ON or OFF state of the 1 K Inputs and 1 K Outputs in the main I/O chain is maintained in the I/O Status Table. The ON or OFF states of I/O points in the Auxiliary I/O chain are maintained in the Auxiliary I/O Status Table which is mapped into the first 128 words of Register memory. R0001 to R0064 contains the Auxiliary Output Table, and R0065 to R0128 contains the Auxiliary Input table.

Expanded Mode I/O Addressing

When the Expanded I/Omode is selected, a total of 8K Inputs and 8K Outputs in the Main I/O chain are available to the user. In addition, if the Auxiliary I/O chain is selected (requires an Auxiliary I/O module) 8K Inputs and 8K Outputs are available in the Auxiliary chain. The total real I/O available through the use of both chains is 16K Inputs and 16K Outputs (32K total points). I/O points in the Expanded mode are selected in 1K (1 K tnputs and 1 K outputs) increments, referred to as channels.

An I/O Transmitter module is required for each channel of I/O, with the exception that if channels 0 and 8 are the only Expanded mode channels selected, an I/O Transmitter is not needed since the I/O is scanned the same as the Main and Auxiliary I/O chains in the Normal mode. If more than two channels are to be used, I/O Transmitters are required. A jumper on each I/O Transmitter module must be configured for either Normal mode or Expanded mode. The CPU scans only those channels that have been selected. The channel number to be associated with each I/O Transmitter is selected by setting the first 3 switches (switches 1,2, 3) on the DIP switch package on the backplane adjacent to the module.

Channel Reference Numbering

The channels are numbered from 0 to F; the Main I/O chain channels are referenced 0 through 7 and the Auxiliary I/O chain channels are referenced 8 through F.

The format for addressing I/O in the Expanded mode must include a channel number, either I or O, a real I/O state (+) or internal discrete status (-) reference identifier and the I/O number. The exception to this is for channel 0 and 8; channel 0 programming references are O0001 – O1024 and I0001 – I1024, channel 8 programming references are AO0001 – AO1024 and AI0001 – AI1024). References O0+0001 to O0+1024, I0+0001 to I0+1024 (if Auxiliary Inputs and Outputs are not being used) and O8+0001to O8+1024, I8+0001 to I8+1024 cannot be used as real I/O references, but are available for use as discrete programming references.

Artisan Technology Group - Quality Instrumentation ... Guaranteed | (888) 88-SOURCE | www.artisantg.com

Thus, the format for real I/O points for channel 3 in the Main I/O chain is (for example) I3+0001 to I3+1024 for Inputs and O3+0001 to O3+1024 for Outputs. Each IK channel requires 64 words of memory (64 words x 16 bits = 1024 I/O). Note that although 1024 bits are available in each channel, 0001 to 1000 are used for actual I/O points. 1001 to 1024 are reserved for special use.

Real I/O Memory Allocation

In the Expanded mode, the real I/O points for Channel 0 are scanned on the Main I/O chain (references 10001 - I1024 and O0001 – O1024) and their status is maintained in the Main I/O status table. Channel 8, which is the first Auxiliary I/O channel in Expanded mode, is scanned on the Auxiliary I/O chain (references AI0001 – AI1024 and AO0001 – AO1024) and its I/O status is maintained in Registers R0001 through R0128, which is the Auxiliary I/O status table. Channels 1 through 7 of real I/O are mapped into Registers R0129 through R0961 and the Auxiliary channel real I/O, Channels 9 through F are mapped into Registers R1153 through R2048. This mapping scheme is valid for systems having either 8K or 16K words of register memory. For mapping of 1K or 256 register systems, refer to Chapter 4. There you will find illustrations of memory allocation for each register configuration.

The override tables are associated only with the I, AI, O, and AO references. The transition tables, which are required for operation of one-shot and counter functions, are associated only with the O and AO references.

Internal Discrete Reference Memory Allocation

The internal discrete references (I/O states) for Channels 0 through 7, which can be used for program references, but are not available to real world inputs or outputs, are mapped into Registers R2049 through R3072. The internal discrete references for Auxiliary channels 8 through F are mapped into Registers R3073 through R4097 for systems having 8K or 16K of registers.

Expanded Mode I/O References

Table 2.11 is a list of Expanded Mode I/O point references for each channel and their memory location. There is a total of 66K of discrete references supported by the Series Six Plus PC. These references include 4K in the Main and Auxiliary I/O chain (I, O, AI, AO), 30K of real I/O, and 32K of internal references when in the Expanded mode. Any reference that is not used as a real I/O point can be used for internal reference or retentive data storage (registers).

Artisan Technology Group - Quality Instrumentation ... Guaranteed | (888) 88-SOURCE | www.artisantg.com

Table 2.11 I/O POINT REFERENCES AND REGISTER MAPPING FOR EXPANDED MODE OPERATION

REAL I/O POINTS			INTERNAL DISCRETE REFERENCES	
REGISTER	I/O REFERENCE		REGISTER	I/O REFERENCE
R0001	AO0001 - AO1024	AUX	R2049	O0-0001 - O0-1024
R0065	AI0001 - AI1024	AUX	R2113	I0-0001 - I0-1024
R0129	O1+0001 - O1+1024	M	R2177	O1-0001 - O1-1024
R0193	I1+0001 - I1+1024	A	R2241	I1-0001 - I1-1024
R0257	O2+0001 - O2+1024	I	R2305	O2-0001 - O2-1024
R0321	I2+0001 - I2+1024	N	R2369	I2-0001 - I2-1024
R0385	O3+0001 - O3+1024		R2433	O3-0001 - O3-1024
R0449	I3+0001 - I3+1024	I	R2497	I3-0001 - I3-1024
R0513	O4+0001 - O4+1024	O	R2561	O4-0001 - O4-1024
R0577	I4+0001 - I4+1024		R2625	I4-0001 - I4-1024
R0641	O5+0001 - O5+1024	C	R2689	O5-0001 - O5-1024
R0705	I5+0001 - I5+1024	H	R2753	I5-0001 - I5-1024
R0769	O6+0001 - O6+1024	A	R2817	O6-0001 - O6-1024
R0833	I6+0001 - I6+1024	I	R2881	I6-0001 - I6-1024
R0897	O7+0001 - O7+1024	N	R2945	O7-0001 - O7-1024
R0961	I7+0001 - I7+1024		R3009	I7-0001 - I7-1024
R1025	User Registers		R3073	O8-0001 - O8-1024
R1089	User registers		R3137	I8-0001 - I8-1024
R1153	O9+0001 - O9+1024	A	R3201	O9-0001 - O9-1024
R1217	I9+0001 - I9+1024	U	R3265	I9-0001 - I9-1024
R1281	OA+0001 - OA+1024	X	R3329	OA-0001 - OA-1024
R1345	IA+0001 - IA+1024		R3393	IA-0001 - IA-1024
R1409	OB+0001 - OB+1024	I	R3457	OB-0001 - OB-1024
R1473	IB+0001 - IB+1024	O	R3521	IB-0001 - IB-1024
R1537	OC+0001 - OC+1024		R3585	OC-0001 - OC-1024
R1601	IC+0001 - IC+1024	C	R3649	IC-0001 - IC-1024
R1665	OD+0001 - OD+1024	H	R3713	OD-0001 - OD-1024
R1729	ID+0001 - ID+1024	A	R3777	ID-0001 - ID-1024
R1793	OE+0001 - OE+1024	I	R3841	OE-0001 - OE-1024
R1857	IE+0001 - IE+1024	N	R3905	IE-0001 - IE-1024
R1921	OF+0001 - OF+1024		R3969	OF-0001 - OF-1024
R1985	IF+0001 - IF+1024		R4033	IF-0001 - IF-1024

1. Channel 0 real I/O is scanned on the Main I/O chain (references O0001 - O1024 and I0001 - I1024).
2. Channel 8 real I/O is mapped into Registers 1 - 128 (references AO0001 - AO1024 and AI0001 - AI1024).
3. References O8+0001 - O8+1024, I8+0001 - I8+1024 cannot be used as real I/O references, but are available for use as discrete programming references.
4. Channel 1 - 7 real I/O references are for the Expanded Main I/O Channels.
5. Channel 9 - F real I/O references are for the Expanded Auxiliary I/O Channels.

Artisan Technology Group - Quality Instrumentation ... Guaranteed | (888) 88-SOURCE | www.artisantg.com

I/O SYSTEM CONFIGURATION

A Series Six Plus PLC I/O system can be configured as 3 types of interconnected I/O groupings of racks referred to as stations. The 3 systems (stations) are described in the following pages. I/O racks are connected by interface modules located in the CPU or I/O racks. Interfacing is through the parallel bus channel using a 16-pair shielded cable for CPU I/O stations and Local I/O stations. Interfacing to the Remote I/O station is through a serial communication channel using a 2-pair shielded cable or an RS-232 modem link.

The number of I/O racks and modules in a system is determined by the number of I/O points required by the application. The maximum number of I/O points in a system is determined by the mode of operation, either NORMAL or EXPANDED, and the number of selected channels in the system. Each I/O rack contains a power supply, an interface module and up to 10 additional modules. The station configuration will be shown in detail in the illustration included in this section for each I/O station.

I/O Rack Interconnections

I/O racks are interconnected in a system by using combinations of I/O Receivers, Advanced I/O Receivers, I/O Transmitters, Remote I/O Drivers or Remote I/O Receivers, depending on the number of I/O points required, the grouping, and location of the racks. Racks are grouped together in either a CPU station, a Local I/O station or a Remote I/O station depending on their physical location and distance from the CPU and from other I/O racks.

Each I/O rack requires a receiver which isolates the I/O data cable from the backplane bus and performs error checking. A receiver does not require an address and is normally inserted in the left slot; however, a receiver can be placed in any I/O slot. Two connectors are mounted on each receiver, the top one is for incoming data and the bottom one is used to forward data to a receiver in the next rack of an I/O chain. This method of linking I/O racks together in a station is referred to as a daisy chain. A group of I/O racks in a daisy chain can have no more than 50 feet (15 meters) separating the first rack from the last and there can be a maximum of ten I/O racks in the chain.

The last rack in a daisy chain requires termination of the I/O signals. This is done by configuring the DIP shunts and jumper pack on the last I/O Receiver module in the daisy chain. Optionally, the Workmaster computer can be connected to the bottom connector of the last rack in a CPU station or Local I/O station.

I/O racks separated by no more than 500 feet (150 meters) can be connected from an I/O Transmitter, through a 16 pair cable to an I/O Receiver or Advanced I/O Receiver in the first I/O rack of a chain of no more than ten racks. A total of four Local I/O stations can be connected in this manner; however, the last Receiver can be no more than 2000 cable feet (600 meters) from the originating CPU.

Artisan Technology Group - Quality Instrumentation ... Guaranteed | (888) 88-SOURCE | www.artisantg.com

A Remote I/O system allows I/O racks to be located up to 10,000 feet (3 km) from any rack in a CPU station or a Local I/O station by direct cable connection. A Remote I/O Driver placed in a slot in a CPU station or Local station is connected through a two twisted pair serial cable to a Remote I/O Receiver located in the left slot of a remote station. Any number of Remote I/O Drivers and Remote I/O Receivers can be used in a system. Up to 243 inputs and 248 outputs can be located in a Remote I/O station.

Additionally a CPU station or Local station can be connected to a remote station at distances greater than 10,000 feet (3 Km) by using a communications fink consisting of RS-232 modems.

CPU I/O Station

The CPU I/O station, as illustrated in figure 2.21, consists of a Series Six Plus CPU with up to 10 I/O racks. The racks are daisy chained on the parallel I/O bus (to the I/O Control module) with the last I/O rack located physically no more than 50 feet from the CPU.

Each I/O rack in the chain includes a Power Supply module (standard ac or high-capacity ac or dc in a 19" rack, or high-capacity ac in a 13" rack), an I/O Receiver or Advanced I/O Receiver module and up to 10 additional modules in a 19" rack or up to 7 additional modules in a 13" rack, The modules in the I/O rack are determined by the system configuration required. The modules can be a combination of the following modules: Input modules, Output modules, I/O Transmitter module and Remote I/O Driver module. Each I/O rack must have one, (and only one) I/O Receiver or Advanced I/O Receiver.

If more than 10 I/O racks are required in a system, one or any of the I/O racks in the CPU station may contain any combination of I/O Transmitter or Remote I/O Driver modules for connection to additional I/O racks.

A Workmaster or Cimstar I computer, or PDT can be plugged into the I/O Control module at the CPU, an I/O Receiver or Advanced I/O Receiver in the last I/O rack in a CPU I/O station or a Local I/O station. The Workmaster or Cimstar I computer can also be plugged into an I/O Transmitter in a CPU station or Local I/O station. When connected to an I/O Transmitter, the Workmaster or Cimstar I computer can be connected through the 100, 200 or 500 foot lengths of I/O cable. The PDT can only be used in the Normal mode and only with the Advanced functions.

Artisan Technology Group - Quality Instrumentation ... Guaranteed | (888) 88-SOURCE | www.artisantg.com

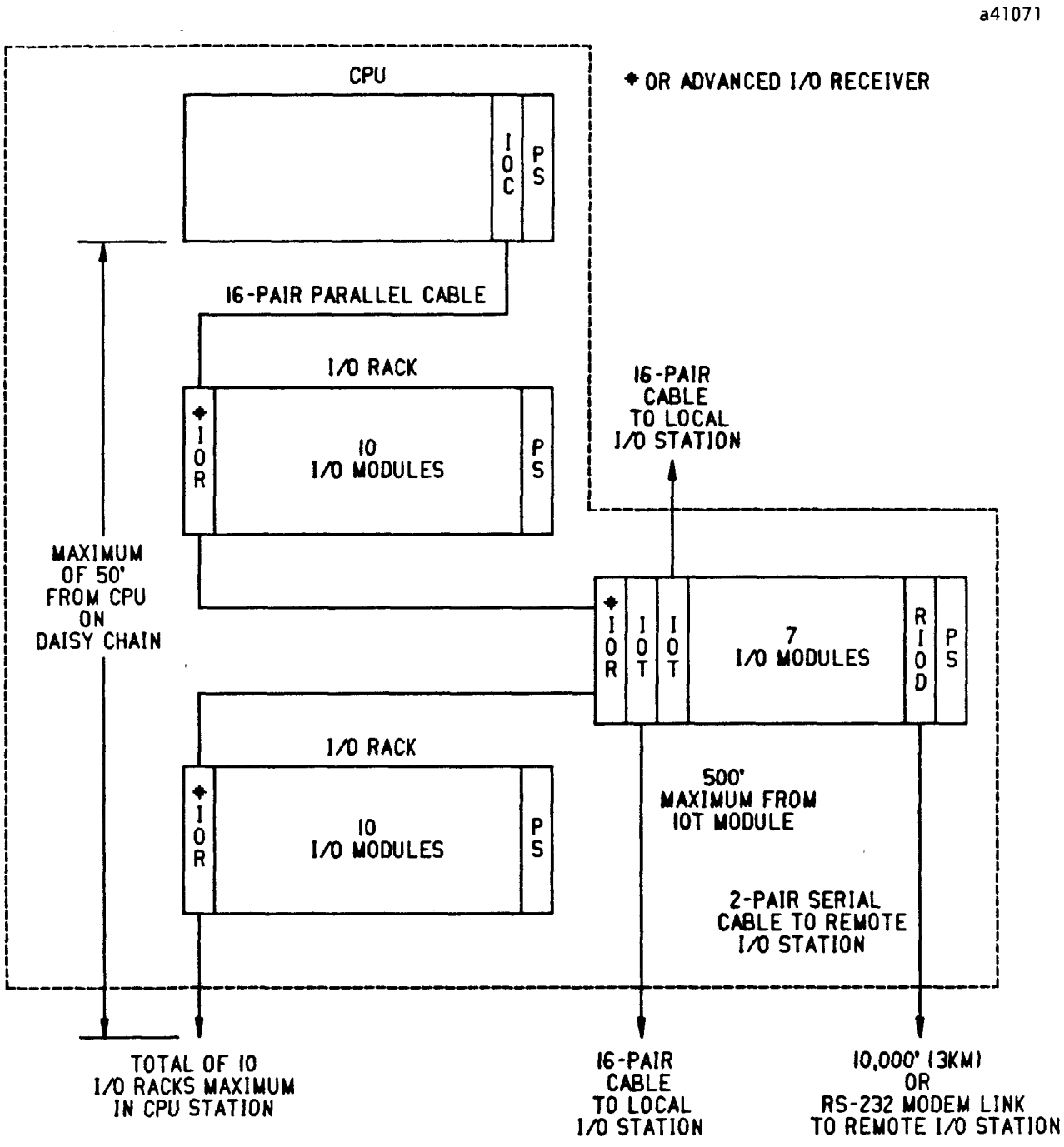

Figure 2.21 CPU I/O STATION

(1) 19" racks are shown. 13" racks can contain a maximum of 8 modules.

Artisan Technology Group - Quality Instrumentation ... Guaranteed | (888) 88-SOURCE | www.artisantg.com

Local I/O Station

A Local I/O station can have up to 10 I/O racks daisy chained on the parallel bus channel. No more than 50 feet of cable can separate the first and last rack in a Local I/O station. A Local I/O station is linked to a CPU, a CPU I/O station or another Local I/O station. The interface is from an I/O Transmitter module to an I/O Receiver or Advanced I/O Receiver module. The I/O Receiver module may be located a maximum of 500 feet from the I/O Transmitter module. The last Local I/O station in a chain can be a maximum of 2000 feet (four I/O Transmitter links) from the originating I/O Control or Auxiliary I/O module in the CPU station.

A Workmaster or Cimstar I computer, or PDT (PDT - Normal mode with Advanced functions only) can be plugged into any Local I/O station. This scheme allows the programming device to be located up to 2000 feet from the CPU. Each I/O rack in the Local I/O station can have the same combination of modules as the I/O racks in a CPU station. The illustration shows configurations for 19" racks, 13" racks can contain a total of 8 modules.

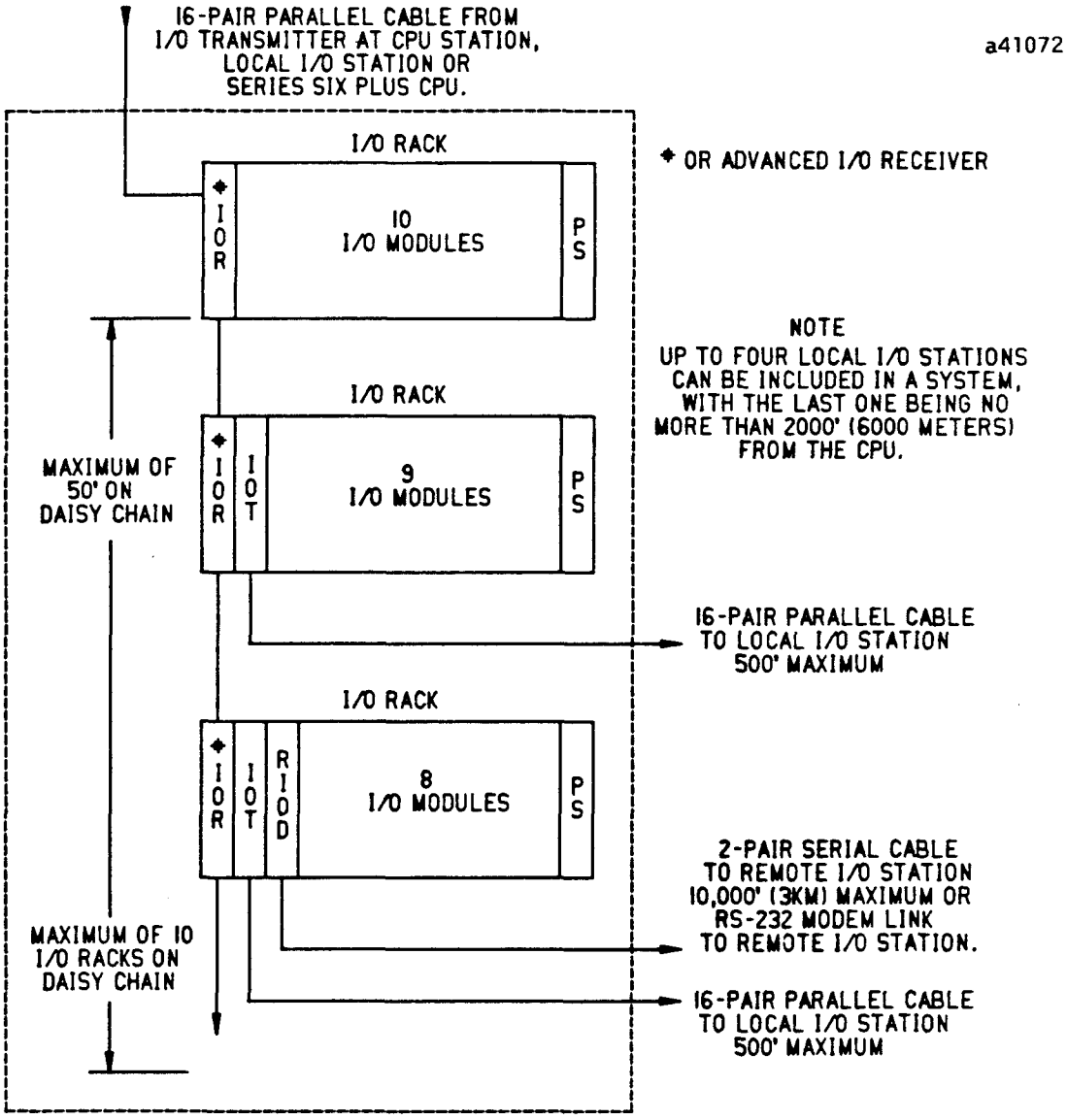

Figure 2.22 LOCAL I/O STATION

Artisan Technology Group - Quality Instrumentation ... Guaranteed | (888) 88-SOURCE | www.artisantg.com

Remote I/O Station

A Remote I/O station consists of I/O racks connected in a daisy chain through the parallel I/O bus. A combination of I/O modules with a total of either 120 inputs and 120 outputs or 248 inputs and 248 outputs (jumper selectable) can be located in a Remote I/O station. The first and last rack in a Remote I/O station daisy chain can be separated by no more than 50 feet (15 meters) of cable.

In addition to the racks on the daisy chain an I/O Transmitter located in a rack in the Remote I/O station can be the first in a link of I/O Transmitters connecting to additional groupings of racks. An I/O Transmitter can be connected to the first rack in a group of racks by a 16-pair parallel cable with a length up to 500 feet (150 meters). Up to four links can be connected in this manner, thereby extending the Remote I/O station an additional 2000 feet (600 meters).

NOTE

> The total number of I/O points assigned to a Remote I/O station (either 120/120 I/O or 248/248 I/O) cannot be exceeded regardless of the rack configuration.

A Remote I/O station connects to an upstream I/O rack in either a CPU station, Local I/O station or to an I/O slot in a CPU rack. The connection is made through a serial communication channel by a two-twisted pair shielded cable or through an RS-232 compatible modem link. The system interface module in the CPU rack, the CPU I/O station or Local I/O station is a Remote I/O Driver and the system interface module in the Remote I/O station is a Remote I/O Receiver.

The serial communications link to the Remote I/O station can be up to 10,000 feet (3 Km) using a two-twisted pair cable. With an RS-232 modem link, the distance between local and remote I/O is virtually unlimited.

NOTE

> A Remote I/O Driver module cannot be installed in a Remote I/O station. A Workmaster or Cimstar I computer, or PDT cannot be connected to a Remote I/O stat ion.

Figure 2.23 illustrates a typical configuration for a Remote I/O station. The illustration shows how a Remote I/O station can be extended an additional 2000 feet (600 meters) by using I/O Transmitters to connect additional racks to the parallel bus.

Artisan Technology Group - Quality Instrumentation ... Guaranteed | (888) 88-SOURCE | www.artisantg.com

a41073

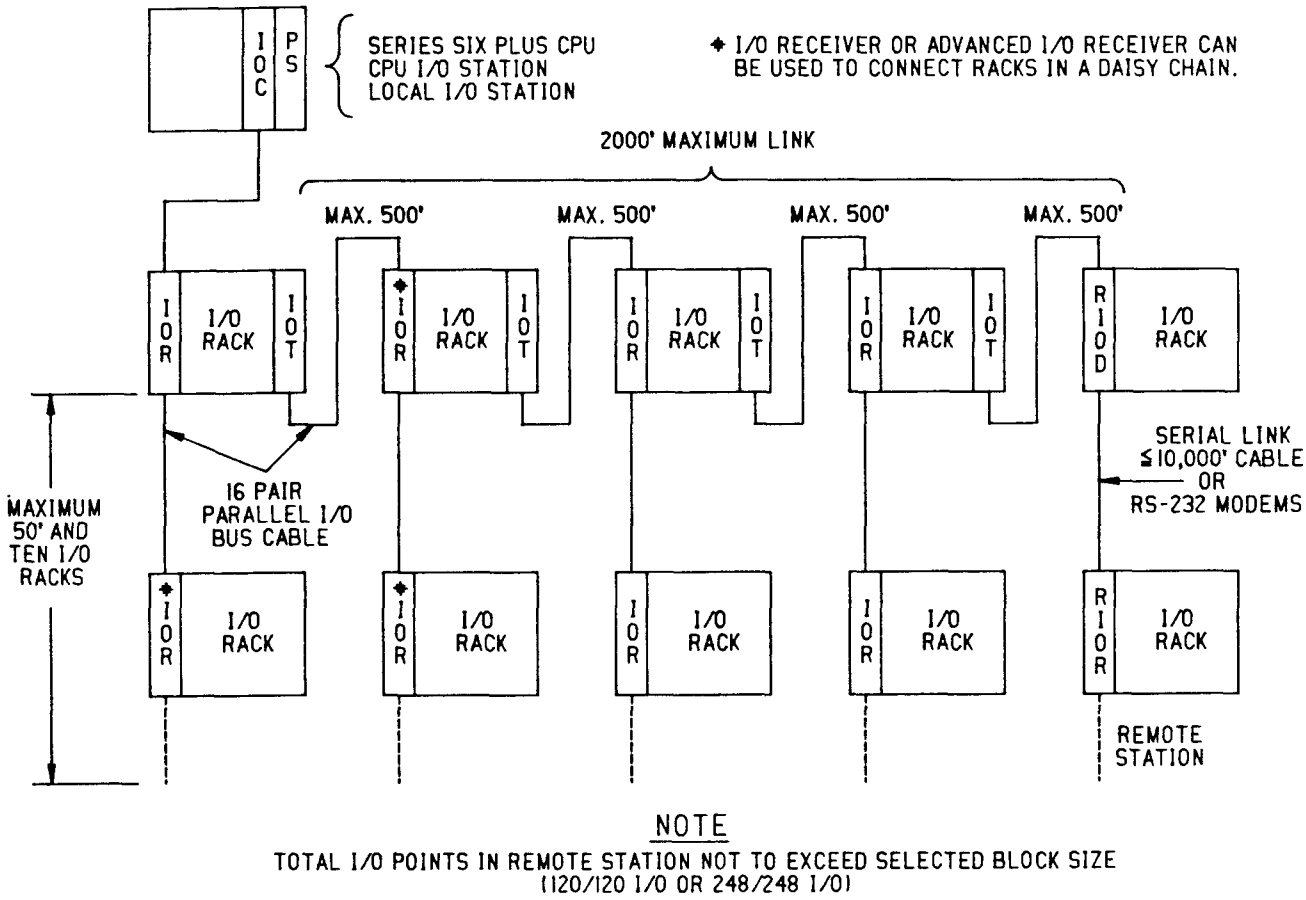

NOTE

TOTAL I/O POINTS IN REMOTE STATION NOT TO EXCEED SELECTED BLOCK SIZE (120/120 I/O OR 248/248 I/O)

NOTE

Total I/O Points Not To Exceed Selected Block Size (120/120 I/O or 248/248 I/O).

Figure 2.23 REMOTE I/O STATION CONFIGURATION

Artisan Technology Group - Quality Instrumentation ... Guaranteed | (888) 88-SOURCE | www.artisantg.com

I/O INTERFACE MODULES

The I/O interface modules are used to connect I/O racks to the CPU and I/O racks to I/O racks. Table 2.12 is a list of the I/O interface modules, including catalog numbers and basic descriptions. A more detailed description of each module is provided in the following pages.

Table 2.12 I/O INTERFACE MODULES

MODULE NAME	CATALOG NUMBER	DESCRIPTION
I/O RECEIVER	IC600BF800	Interfaces the parallel I/O bus to the I/O modules located in an I/O rack. Required in each I/O rack, except the first rack in a Remote I/O station.
ADVANCED I/O RECEIVER	IC600BF830	Performs same interface functions as the I/O Receiver, plus adapted for situations requiring additional diagnostics.
I/O TRANSMITTER	IC600BF900	Interfaces a rack in a CPU station or Local I/O station to a Local I/O station, downstream, at distances up to 500 feet. Contains configurable jumpers to allow selection of either NORMAL or EXPANDED I/O modes. Each transmitter can drive one I/O channel (1K Inputs and 1K Outputs).
REMOTE I/O DRIVER	IC600BF901	Interfaces a rack in a CPU or Local I/O station to a Remote I/O station located at distances up to 10,000 feet by direct cable; greater distances by RS-232 modem link.
REMOTE I/O RECEIVER	IC600BF801	Interfaces a Remote I/O station through a serial link from a Remote I/O Driver.

Artisan Technology Group - Quality Instrumentation ... Guaranteed | (888) 88-SOURCE | www.artisantg.com

I/O Receiver

The function of the I/O Receiver (figure 2.24) is to connect the I/O chain parallel bus to the I/O modules in an I/O rack. I/O racks are connected in a station (grouping of I/O racks) by linking I/O Receivers together through a 16-pair twisted cable. No more than 10 racks can be connected in a station. A linking of racks in this configuration is referred to as a daisy chain. The total cable length in a daisy chain originating from the I/O Control module in a CPU station or the originating I/O Receiver in a Local I/O station can be no more than 50 feet (15 meters).

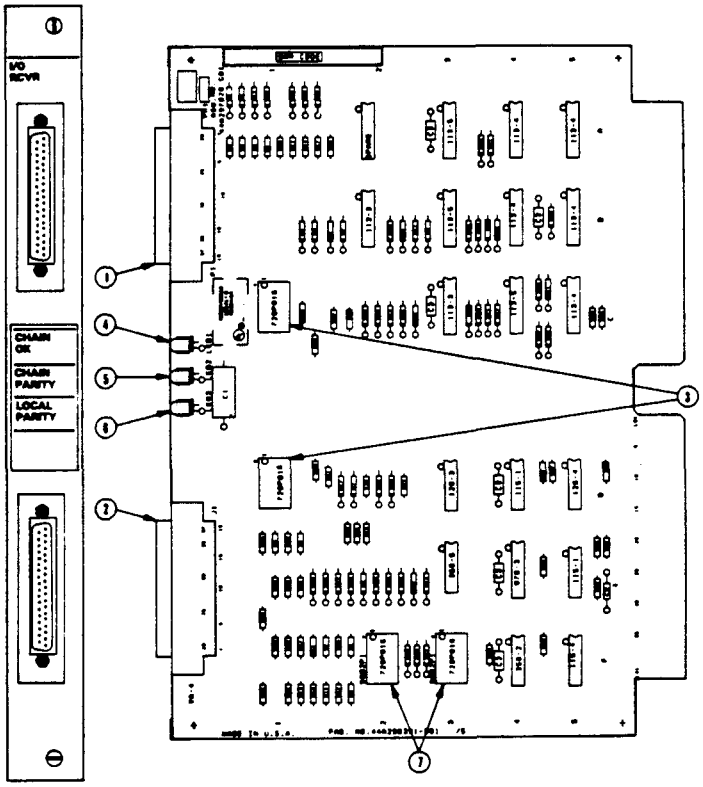

s6840113

1. P1: D-Type 37-Pin Connector to Upstream I/O Receiver, Advanced I/O Receiver, I/O Transmitter, I/O Control, or Remote I/O Receiver Module.
2. J1: D-Type 37-Pin Connector to Downstream Receiver Module.
3. Locations C1 and D1:
   Jumper-pack or DIP-shunts are installed in these locations.
4. CHAIN OK Light:
   On: Power is OK in this and all downstream racks and stations, and continuity is OK to all downstream points.
   Off: At least one of these conditions is not met.
5. CHAIN PARITY Light:
   On: Output parity is OK at all downstream stations which are connected through an I/O Transmitter in this rack.
   Off: There is an output parity error at one (or more) of these stations.
6. LOCAL PARITY Light:
   On: Output parity is OK at this module.
   Off: This module has detected an output parity error.
7. Locations F3 and F4:
   DIP-SHUNT and JUMPER-PACK Sockets:

Figure 2.24 I/O RECEIVER USER ITEMS

Artisan Technology Group - Quality Instrumentation ... Guaranteed | (888) 88-SOURCE | www.artisantg.com

The I/O Receiver module receives signals through the parallel bus link, modifies the signals to update the status of inputs and outputs, then relays those signals to the next rack in a chain. Racks can be connected when they are more than 50 feet (15 meters) from a CPU by connecting an I/O Receiver in the first rack of the distant grouping to an I/O Transmitter through a 16-pair twisted cable on the parallel bus. The length of this cable can not exceed 500 feet (150 meters). This distant grouping of racks at the end of a parallel bus cable is referred to as a Local I/O station. Again, up to 10 I/O racks can be daisy-chained in a Local I/O station with no more than 50 feet (15 meters) of cable separating the first and the last rack.

The maximum distance an I/O Receiver can be located from the originating I/O Control or Auxiliary l/O Control module is 2000 cable feet (600 meters). In a Remote I/O station, an I/O Receiver is used when connecting racks on the daisy chain in the station if more than one I/O rack is required in the station.

An l/O Receiver is normally installed in the leftmost slot of an I/O rack; however, it could be inserted into any I/O slot in an l/O rack if required. An I/O Receiver can be installed in any I/O rack except the first I/O rack in a Remote l/O station, this rack requires a Remote l/O Receiver.

I/O Chain Signal Continuation or Termination

Before installation of an I/O Receiver in an I/O rack, it must be determined if the module is to be in the last rack of an I/O station daisy chain or in a rack within the chain. An I/O Receiver, as received from the factory, is configured to continue the l/O chain signals through the module toward the next I/O Receiver in the chain. If the module is to be the last I/O Receiver in the daisy chain a jumper pack must be removed from its socket at location D1 and DIP shunts inserted into the sockets at locations C1 and D1. When installed in these locations, the DIP shunts wiII cause the I/O chain signals to terminate. Figure 2.25 shows the location of these jumpers.

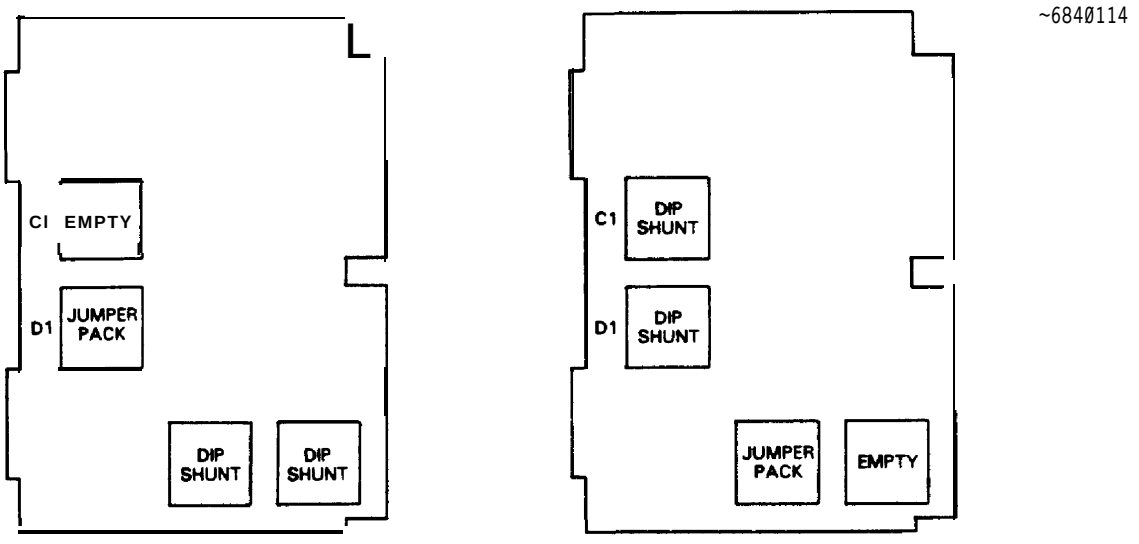

Factory Setting
(Cont inues l/O Chain Signals)

Last l/O Rack in Daisy Chain
(Terminates l/O Chain Signals)

Figure 2.25 l/O RECEIVER DIP SHUNT/JUMPER RACK CONFIGURATION

Artisan Technology Group - Quality Instrumentation ... Guaranteed | (888) 88-SOURCE | www.artisantg.com

If an I/O Receiver should be removed from the last rack in a daisy chain and moved to a rack upstream, the jumper pack and DIP shunts must be reconfigured to continue the I/O chain signals. Conversely, if an I/O Receiver is moved from a rack within the chain to the last rack in the chain, the jumper pack and DIP shunts must be reconfigured to terminate the I/O chain signals.

When a jumper pack is not inserted in location D1 or the DIP shunts are not installed in locations Cl and D1, they should be inserted in spare sockets located at the bottom of the printed circuit board. These spare sockets are in board locations F2 and F3.

Module Connections

Two 37 pin D-type connectors are mounted on the front edge of the module. The bottom connector connects to downstream I/O racks. The top connector connects to the next upstream I/O rack, to an I/O Transmitter at the opposite end of a parallel bus cable, or to an I/O Control module in' a CPU rack.

Status Indicators

There are three edge-mounted LEDs which provide a visual status of certain fault indications on the I/O chain. The LEDs are viewed through the lens on the faceplate. Table 2.13 defines the status provided by each LED.

Table 2.13 I/O RECEIVER STATUS INDICATORS

INDICATOR	DEFINITION
POWER ON	ON when station power is present, continuity is present and all stations downstream are OK.
CHAIN PARITY	ON when all downstream statlons have received good parity.
LOCAL PARITY	ON when the I/O Receiver has received good output parity.

Artisan Technology Group - Quality Instrumentation ... Guaranteed | (888) 88-SOURCE | www.artisantg.com

Advanced I/O Receiver

The Advanced I/O Receiver module allows the I/O connected to a Series Six Plus CPU to be more versatile in how I/O failures are detected and enables the Series Six Plus CPU to respond to these faults. When using this module, all levels of Series Six Plus software can be programmed using relay logic to respond to I/O faults, such as a power supply failure or a break in the I/O cable. When this module is used with CPU software level 105 or above, relay logic can also be used to address the problems of input and output parity errors.

If any of the advanced diagnostics are to be used, an Input and Output address must be selected by setting two sets of DIP switches located on the board. The Inputs provide status information to the CPU relative to the Advanced I/O Receiver. The state of the output data is controlled by CPU relay logic programmed by the user. Any valid I/O address can be selected. The Input and Output addresses do not have to be the same; however, identical addresses can be selected.

In many applications it is desirable to allow the user program to decide whether the CPU should stop on an I/O system error or continue to run under controlled conditions. This module allows that decision to be made. A decision can also be made to select a particular I/O chain (usually the chain that contains the fault) to be shut down while allowing the balance of the system to continue to run.

The Advanced I/O Receiver module provides status information accessible to the CPU user program indicating where in the I/O system an error occurred, and what type of error it was. Using this information the CPU can be programmed to respond in a controlled manner based upon the type of error detected. Errors sensed by this module include input and output parity, power supply failure, and I/O cable failures.

Module Connections

The Advanced I/O Receiver module has two 37-pin connectors available through the faceplate, The top connector receives an I/O cable that is connected to an upstream I/O rack or directly to the CPU. If coming from another upstream I/O rack, it may be connected to a standard or Advanced I/O Receiver module, or to a Local I/O Transmitter module. The bottom connector can be left unconnected, connected to a standard or Advanced I/O Receiver module, or be connected to a Workmaster computer or Program Development Terminal. Any of the modules mentioned above can be connected and intermixed to meet the requirements of a given application.

On both the standard and Advanced I/O Receivers, the top and bottom connectors are connected together internally, thus, data signals can pass through them even though the I/O rack may be non-functional. In the Advanced module, data can also pass through even if the power supply is turned off.

Artisan Technology Group - Quality Instrumentation ... Guaranteed | (888) 88-SOURCE | www.artisantg.com

I/O Signal Continuation or Termination

Located on the Advanced I/O Receiver module are two identical DIP resistor pacs. The location of these DIP pacs determines if the module is used in an intermediate I/O rack or used in the last rack of an I/O chain. The module is configured for use in an intermediate rack when the DIP resistor pacs are located in sockets U7 and US (default positions). When configured as the last rack in an I/O chain, the resistor pacs must be located in sockets U12 and U50 The resistor pacs are identical and thus can be interchanged.

Figure 2.26 is an illustration of the Advanced I/O Receiver, showing the location of user items.

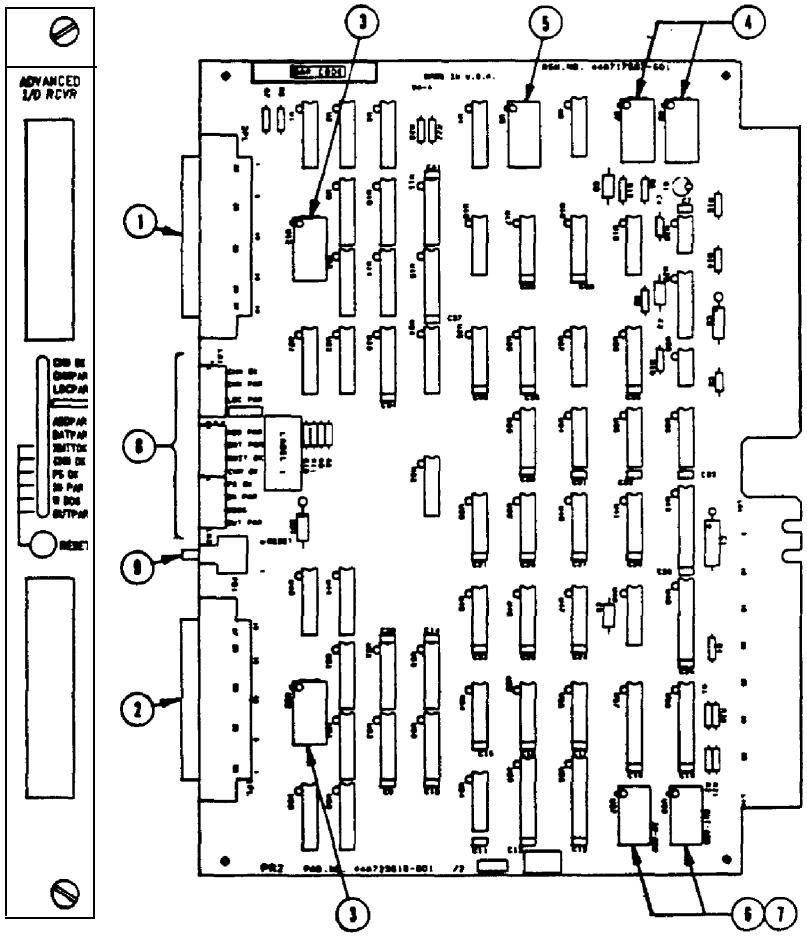

a40205

1. D-type 37-pin connector to upstream modules.
2. D-type 37-pin connector to downstream modules.
3. Resistor pac locations for last I/O rack in chain.
4. Resistor pac locations for intermediate I/O rack in chain.
5. Dip switch for selection of module options.
6. Dip switch for selection of Input address.
7. Dip switch for selection of Output address,
8. Location of 12 LED diagnostic indicators.
9. Location of external Reset pushbutton.

Figure 2.26 LOCATION OF USER ITEMS

Artisan Technology Group - Quality Instrumentation ... Guaranteed | (888) 88-SOURCE | www.artisantg.com

Status and Diagnostic Indicators

Twelve LED diagnostic indicators, visible through the faceplate, are mounted on the Advanced I/O Receiver module. These LED's are used to indicate status and the results of diagnostic routines executed by the module. The last six indicators are latched-in (or turned off) when a fault is sensed as some faults may be transitory or intermittent. These latched-in fault indications can be reset (if the fault is cleared) by depressing the RESET pushbutton that is accessible through the faceplate, or by CPU logic sending a latch reset signal through the I/O chain. This signal is read by the module via the I/O addresses that have been previously set and enabled. Cycling the power of the rack that contains the module will also reset the LED indicators. Note that the power supply OK LED indicator will be latched off when this is done. The following table describes the function of each diagnostic indicator.

Table 2.14 STATUS AND DIAGNOSTIC INDICATOR DEFINITIONS

CHN OK	CHAIN OKAY, ON if power is okay in all downstream racks, and if cable continuity is okay to all downstream racks; OFF if one of the above conditions is not met.
CHNPAR	CHAIN PARITY, ON 1f Output Parity is okay on rack backplane; OFF if Output Parity Error is sensed from a Local Transmitter or Remote I/O Driver in this rack.
LOCPAR	LOCAL PARITY, ON if Output Parity 1s okay in this rack; OFF if this module has detected an Output Parity Error entering from an upstream rack.
BLANK	The state of this LED is controlled by CPU logic and transmitted to the module via its I/O address. The default state of this LED is ON.
ADDPAR	ADDRESS PARITY, ON if no error 1s detected in the I/O address transmitted from the CPU through the I/O chain; OFF if a Parity Error is detected in the I/O address transmitted from the CPU. Successful retransmission of the address will clear the Parity Error.
DATPAR	DATA PARITY, ON if no error is detected in the I/Ø data transmitted from the CPU through the I/O chain; OFF if a Parity Error is detected in the I/O data transmitted from the CPU. Successful retransmission of data will clear Parity Error.
XMITOK	TRANSMIT OKAY, ON if power is okay and cable continuity is okay to all downstream racks connected to a Local Transmitter or Remote I/O Driver module that is located in this rack; latched OFF if the above conditions are not met in one or more of the connected racks.
CHN OK	CHAIN OKAY, ON if power and cable continuity is okay to all downstream racks directly connected to this Advanced I/O Receiver; latched OFF if the above conditions are not met in one or more of the connected racks.

Artisan Technology Group - Quality Instrumentation ... Guaranteed | (888) 88-SOURCE | www.artisantg.com

Table 2.14 STATUS AND DIAGNOSTIC INDICATOR DEFINITIONS (Continued)

PS OK	POWER SUPPLY OKAY, ON If power supply in this rack is within tolerance; latched OFF if power supply should fall out of tolerance. LED will-be latched off when power is applied to power supply.
IN PAR	INPUT PARITY, the source of Input Parity Error is determined by the settings of SW6 and SW7 of the diagnostic dip switch; the LED is ON if no Input Parity Error is sensed; latched OFF if an Input Parity Error is sensed from either a Local I/O Transmitter or Remote I/O Driver module mounted In this rack, or from any downstream I/O rack that may be connected directly to the Advanced I/O Receiver module in this rack.
W DOG	WATCH DOG TIMER, ON when communications to CPU is okay; latched OFF if the module has not communicated to the CPU within the last one second.
OUTPAR	OUTPUT PARITY, ON if no Parity Error is detected in either the I/O address or I/O data transmitted from the CPU; latched OFF if a Parity Error is detected. This is a latch for ADDPAR and DATPAR indicators previously discussed.

For detailed information on operation of the Advanced I/O Receiver, refer to GEK-90771, which can be found in the Series Six Data Sheet Manual, GEK-25367.

I/O Transmitter

The I/O Transmitter module (figure 2.27) provides an interface between the rack backplane signals and the I/O bus to a downstream Local I/O station. In addition, the mode of operation, either NORMAL or EXPANDED, must be specified by jumper configuration. In the NORMAL mode, there is 1 Main and 1 Auxiliary I/O chain (maximum of 2000 Inputs/2000 Outputs) per CPU. In the EXPANDED mode, there are up to 8 I/O chains (16 with Auxiliary I/O) per CPU. In this configuration, up to 16K Inputs and 16K Outputs (including Auxiliary I/O), are allowed per system. In the EXPANDED mode, if only Channels 0 and 8 are selected, an I/O Transmitter is not required to drive those channels. However, if more than 2 channels are selected, each channel must be driven by an I/O Transmitter* *Any I/O Transmitters located downstream from the first one in a link must be configured to the N0RMAL mode of operation. In other words, if an I/O Transmitter in the CPU rack or the first I/O rack has been configured for EXPANDED mode, any other I/O Transmitters on that link must be configured for NORMAL mode. Likewise, when the first I/O Transmitter in a link is configured to the NORMAL mode, all other IIO Transmitters downstream must also be configured to the NORMAL mode.*

An I/O Transmitter must be used to interface to a Local I/O station if I/O racks are required beyond the capacity of a CPU station (10 I/O racks), an existing Local I/O station or a Series Six Plus CPU rack. Any number of I/O Transmitters can be installed in a rack as long as the I/O load for the rack and the distance limitations are not exceeded. An I/O Transmitter can be installed in a Remote I/O station and linked to additional I/O Transmitters up to 2000 feet 600 meters), thereby extending the Remote I/O capability by that distance. Each I/O Transmitter link cannot exceed 500 feet (150 meters). No more than four I/O Transmitter links can be used with the 2000 foot limitation on the parallel I/O chain.

Artisan Technology Group - Quality Instrumentation ... Guaranteed | (888) 88-SOURCE | www.artisantg.com

Data received at the CPU from each I/O Transmitter is placed in the input status table for input bits IX+1017 through IX+1024 for the addressed channel. The data in this status byte is: bits 1-3, channel number; bit 4, card present; bits 5 and 6, set to 0; bit 7, fault trap enable; bit 8, fault present. If the I/O Transmitter does not respond when addressed, nothing will be written to the input locations for that channel. The channel will be scanned regardless of whether the module responded or not.

When the I/O Transmitter receives its address in the output data (to address 127 (I/O points 1017-1024)) during the I/O scan it connects its channel, as selected by DIP switch setting, to the CPU's I/O chain, thereby enabling its I/O channel. When the data to address 127 is changed to a value other than the DIP switch setting, the I/O Transmitter disconnects its I/O channel from the CPU's I/O chain. When the value 80H (Hexadecimal) is written to address 127 by the CPU, it is interpreted as a command to all of the I/O Transmitters to connect their channels to the CPU's I/O chain (but will not cause them to send input data to the CPU).

a40757

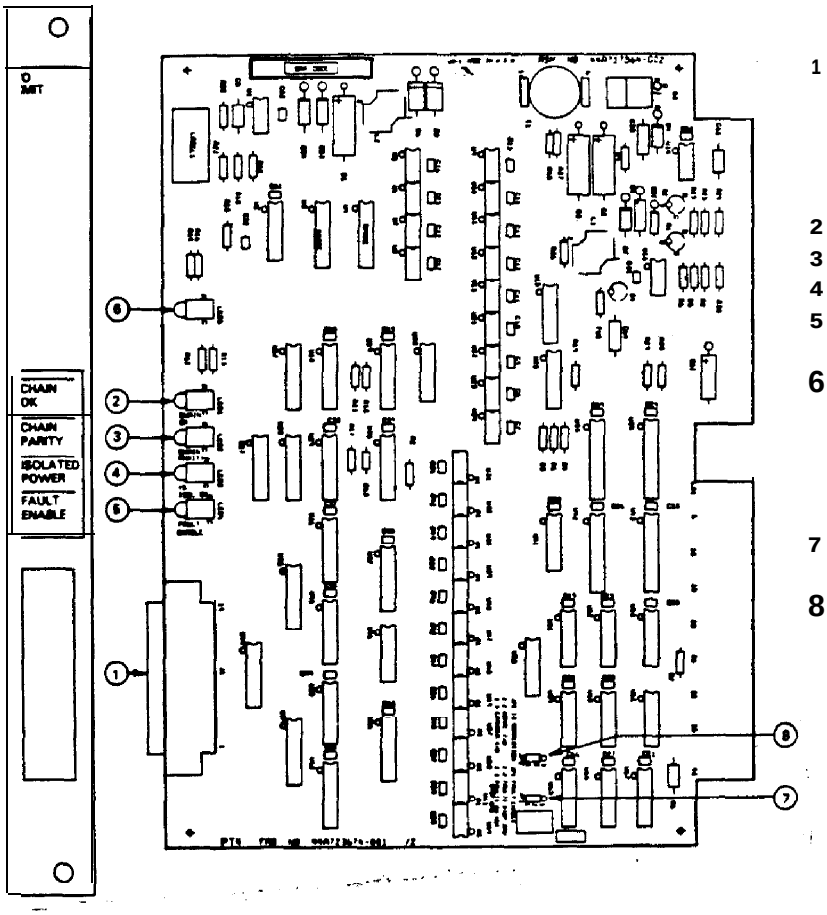

1 D-Type 37-Pin Connector to I/O Receiver or Advanced I/O Receiver in Downstream Local I/O station.

2 CHAIN OK Light:
3 CHAIN PARITY Light:
4 ISOLATED POWER Light:
5 FAULT ENABLE Li ght:

6 CHAIN ACTIVE LIGHT:
Not visible with faceplate in place, for use in system set up only. ON for EXPANDED I/O MODE.

7 FAULT ENABLE/DISABLE Selector:

8 NORMAL/EXPANDED I/O SELECTOR:

a. Place the jumper (JP2) over pins 1-2 for NORMAL I/O. One nonselectabl e I/O chain.

b. Place the jumper (JP2) over pins 2-3 for EXPANDED I/O Selectable 1 to 8 chains.

Figure 2.27 I/O TRANSMITTER MODULE

Isolation Circuitry

The I/O Transmitter translates the I/O rack backplane signals into isolated, balanced signals at a level suitable for transmission up to 500 feet (150 meters) and with sufficient power to drive up to 10 I/O Receivers. Optocouplers on the module isolate signals passing through the module and a DC to DC converter provides a +5V dc isolated supply voltage to those circuits connected to the parallel I/O bus. This method of isolation ensures that all Local I/O stations are electrically isolated from each other and from the CPU station.

Artisan Technology Group - Quality Instrumentation ... Guaranteed | (888) 88-SOURCE | www.artisantg.com

Location in Rack and I/O Channel Addressing

An I/O Transmitter can be installed in any card slot in an I/O rack except the leftmost slot which is normally reserved for an I/O Receiver. The seven segment DIP switch on the backplane adjacent to the selected slot for the module does not need to be set for an I/O address, since an I/O Transmitter does not require an I/O address. However, the first 3 (1, 2, and 3) switches on the DIP switch package must be set to select an I/O channel number, when required by system configuration.

Status Indicators

A monitor circuit checks the output level of the isolated +5V dc supply. If the output is not within its specified tolerance, the monitor circuit causes the I/O Transmitter to shut down. An LED indicator (ISOLATED POWER) is on when the voltage is within tolerance. The status of other LED indicators are defined in table 2.15.

Table 2.15 I/O TRANSMITTER STATUS INDICATOR DEFINITIONS

INDICATOR	DEFINITION
CHAIN OK	ON when station power is OK and continuity is present to all downstream stations.
CHAIN PARITY	ON when output parity is OK at all downstream stations.
ISOLATED POWER	ON when the output voltage of the +5V dc isolated power supply is within tolerance.
FAULT ENABLE	ON when the module has been configured to stop the system for a local fault condition.
CHAIN ACTIVE	This LED is not visible through the faceplate. Used for set up only. When ON, indicates that the EXPANDED I/O chain is active.

Configuration Jumpers

Two items are configurable by placing a jumper plug over the desired set of pins. By configuring JP1, the user can select to enable the system stop for a local fault or not to stop the system on a local fault. The second jumper plug, JP2, is used to select the I/O mode of operation for this module, either NORMAL I/O (one non-selectable I/O chain) or EXPANDED I/O (1 to 8 selectable I/O channels).

Connector

One 37 pin D-type connector is mounted on the bottom front edge of the circuit board. A 16-pair parallel cable plugged into this connector in a Series Six Plus CPU, a CPU station or a Local I/O station connects to the first I/O Receiver or Advanced I/O Receiver in a local I/O station at a distance not to exceed 500 feet (150 meters).

Artisan Technology Group - Quality Instrumentation ... Guaranteed | (888) 88-SOURCE | www.artisantg.com

REMOTE I/O SYSTEM

A Remote I/O system allows a Series Six Plus system to have an I/O capability that extends beyond the limit of the 2000 feet (600 meters) maximum distance allowed with the parallel I/O bus. A Remote I/O system can be located a maximum of 10,000 feet (3 Kilometers) from a CPU, a CPU station, or a Local I/O station when using a two twisted-pair serial cable. In addition a Remote I/O system can be transmitted over voice grade telephone lines through RS-232 or RS-422 compatible modems to a location a great distance from the originating I/O station.

System Connections

A Remote I/O system consists of a Remote I/O Driver, a two twisted-pair serial cable or modems and a Remote I/O Receiver. The Remote I/O Driver is installed in an I/O slot in a CPU, a CPU station or a Local I/O station. The Remote I/O Driver is then connected by cable or a modem link to a Remote I/O Receiver in the first slot of the first I/O rack in a Remote I/O station.

If the Remote I/O Driver and Remote I/O Receiver are to communicate over a modem link, the Remote Receiver module must be installed in a High Capacity I/O rack and the Remote Driver must be in either a High Capacity I/O rack or a CPU I/O slot, since a 12 V dc source must be available to conform to RS-232 specifications. Figure 2.28 illustrates the two methods of system configuration described above.

b4106fi

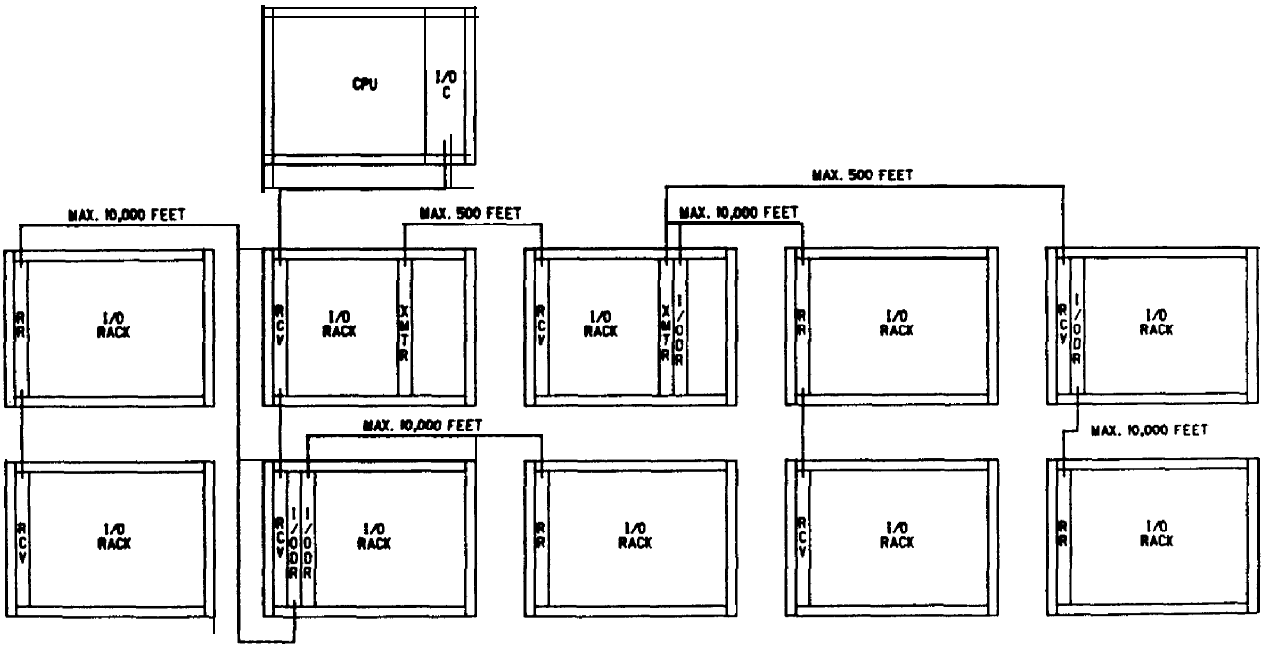

*When connecting to a Remote I/O station through modems (RS-232 interface) the Remote I/O Driver and Remote I/O Receiver must be installed in High-Capacity I/O racks.

Figure 2.28 TYPICAL REMOTE I/O SYSTEM CONNECTIONS

Artisan Technology Group - Quality Instrumentation ... Guaranteed | (888) 88-SOURCE | www.artisantg.com

Remote System Response Time

The response time of a Remote I/O system is slightly delayed because of the distance when using up to the 10,000 foot (3Km) maximum cable length. The response time is delayed further when connection to the Remote I/O is made through the communications link using modems. Part of the delay is due to the fact that the Remote I/O Driver stores output and input data and provides this data when needed to the Remote I/O Receiver and the CPU. This store and forward technique results in a one sweep delay.

NOTE

A one sweep delay for inputs can be avoided if a DO I/O instruction is executed for the Remote I/O prior to executing any logic using remote inputs.

System response times to the Remote I/O for each of the valid baud rates are summarized in table 2.16. The times as listed are approximate maximum response times and may vary slightly from system to system. These response times are due to hardware considerations related to communications between a Remote I/O Driver and a Remote I/O Receiver (component tolerance, cable length, etc.).

Table 2.16 TYPICAL SYSTEM RESPONSE TIMES TO REMOTE I/O

Quantity of I/O in Block	110	300	1200	2400	9600	19.2K	57.6K	
120 I/O	.6 sec	2 sec	.5 sec	.25 sec	70 ms	40 ms	20 ms	(1)
Output Delay	10 sec	4 sec	.9 sec	0.5 sec	.1 sec	60 ms	25 ms	(2)
Input Delay								
248 I/O	11 sec	2 sec	1 sec	.5 sec	.14 sec	75 ms	30 sm	(1)
Output Delay	18 sec	4 sec	1.6 sec	.9 sec	.2 sec	.1 sec	46 ms	(2)
Input Delay								

(1) +1 sweep for all baud rates
(2) +2 sweeps for all baud rates

REMOTE I/O ADDRESSING

A Remote I/O system normally responds to a block of 128 inputs and 128 outputs or 256 inputs and 256 outputs. However, eight inputs and eight outputs are used by the Remote I/O Driver for system status information, thus allowing a total of either 120 inputs and outputs or 248 inputs and outputs. The block of either 120 I/O or 248 I/O is selected by positioning of a jumper on the Remote I/O Driver module.

Artisan Technology Group - Quality Instrumentation ... Guaranteed | (888) 88-SOURCE | www.artisantg.com

The unique I/O points (addresses) for each module in a Remote I/O station are selected by setting the seven segment DIP switch on the backplane adjacent to each slot in the I/O rack. However, all I/O points selected must be within the block selected for the Remote I/O station. The I/O points in a remote system must be within one of the blocks as listed in table 2.17.

Table 2.17 I/O POINT RANGES IN REMOTE I/O STATIONS

120 Inputs/120 Outputs	248 Inputs/ 248 Outputs
1 - 128 129 - 256 257 - 384 385 - 512 513 - 640 641 - 768 769 - 896 897 - 1000 (1)	1 - 256 257 - 512 513 - 768 769 - 1000 (2)

(1) This block selected allows 96 inputs and 96 outputs.
(2) This block selected allows 224 inputs and 224 outputs.

The address selected for the Remote I/O Driver can fall anywhere within the range of I/O points in a block. All I/O modules in a Remote I/O station (including the Remote I/O Driver) must have switches 5, 6 and 7 (120 I/O) or 6 and 7 (248 I/O) set the same. By doing this all modules in a Remote station are thus tied to that particular Remote I/O Driver. More than one Remote I/O station can be programmed to the same I/O block; however, each Remote Driver must have its own unique address. Each Input module must also have a unique address; output module addresses can be duplicated. Unused I/O points in a Remote I/O station can be used by another Remote I/O station, a Local I/O station, a CPU station or a CPU I/O slot.

Printed Circuit Board Jumpers

There are several printed circuit board jumper plugs which must be properly configured for operation of a Remote I/O system. Jumper plugs are located on both the Remote I/O Driver and the Remote I/O Receiver. Factory configuration of these jumpers is set for the following options.

- **120 Inputs and 120 Outputs**
- **Connection up to 10,000 feet (3Km) using two twisted pair serial cable**
- **Baud rate - 57.6Kb**
- **Halt CPU on communications failure or Remote I/O parity error.**
- **Turn all outputs off on communications failure**
- **Odd serial parity**

If a block of 248 Inputs and 248 Outputs, or the Remote I/O system is to be linked with RS-232 compatible modems, or any of the other options are to be changed, the printed circuit board jumper plugs must be reconfigured. Refer to the applicable data sheet in the Series Six Data Sheet manual, GEK-25367, for board jumper configuration.

Artisan Technology Group - Quality Instrumentation ... Guaranteed | (888) 88-SOURCE | www.artisantg.com

Remote I/O Driver

The Remote I/O Driver module provides control and data signals to a Remote I/O station. Circuitry on this module converts output data from parallel to serial and input data from serial to parallel, Specifically, a Remote I/O Driver connects the I/O structure in a CPU, a CPU station or a Local I/O station to a Remote I/O station through a serial communications channel by direct connection with a two twisted-pair cable or a communications link using RS-232 compatible modems.

With two twisted-pair cable, the Remote I/O station can be located up to a maximum of 10,000 feet (3 km) from the Remote I/O Driver. A communications link using modems allows connection over a much greater distance. An I/O Transmitter located in a rack in the Remote I/O station can be the first of a link of up to four 500 foot (150 meters) links using f/O Transmitters, thereby extending the remote capability an additional 2000 feet (600 meters).

a41069

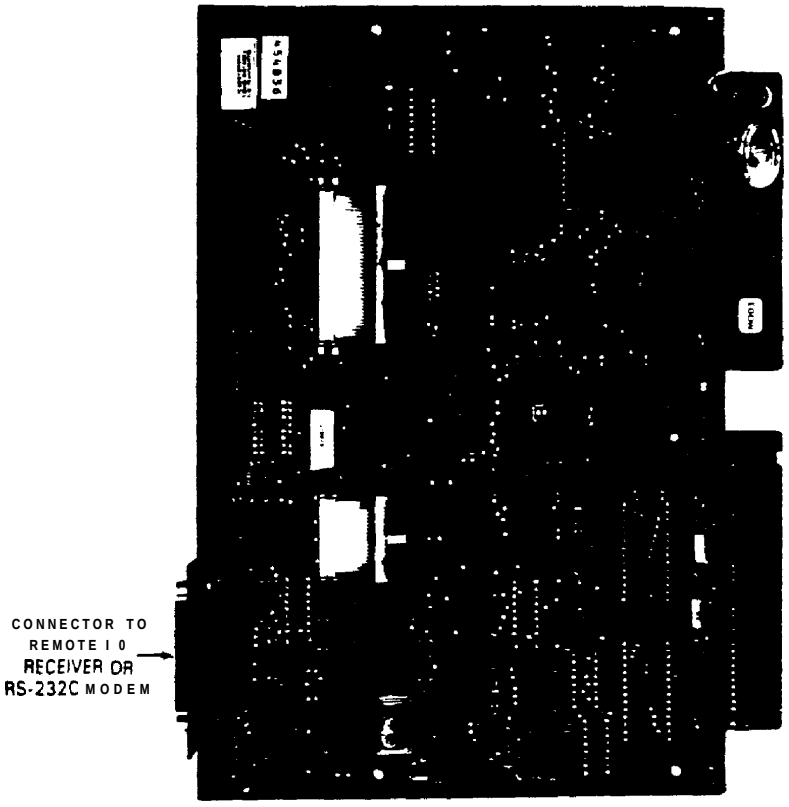

Figure 2.29 REMOTE I/O DRIVER MODULE

The Remote I/O Driver can drive up to 248 Inputs and 248 Outputs. A Remote I/O Driver module can be installed in any unused I/O slot in a CPU station, a Local I/O station or a CPU (except the left most slot in an I/O rack which is reserved for a Receiver module). If connection to the Remote I/O station is to be made through a modem link, the Remote I/O Driver must be installed in a high capacity I/O rack. This is necessary since the RS-232 specification requires +I2 and -12 V dc for operation.

Artisan Technology Group - Quality Instrumentation ... Guaranteed | (888) 88-SOURCE | www.artisantg.com

Remote I/O Driver Addressing

A block of addresses for the Remote I/O station is established by setting the seven segment DIP switch adjacent to the slot selected for the Remote I/O Driver. For a block of 120 I/O, switches 5, 6, and 7 are set to select the block and for 248 I/O, switches 6 and 7 are set to select the block of I/O addresses. All I/O modules in the Remote I/O station connected to a Remote I/O Driver must then have the corresponding DIP switch segments set in the same configuration as the Remote I/O Driver. In all cases switches 1 to 4 or 1 to 5 (in addition to 5, 6, 7 or 6, 7) are configured to set a unique address for each module in the Remote I/O station; i.e. 1-8, 249-256, 673-680, etc.

A unique I/O reference (address) must also be set for the Remote I/O Driver and can be the first of any group of eight consecutive valid I/O references within the selected block. The eight input references provide status information which can be monitored on the programmer by observing the byte in the applicable Input Status Table (Normal mode or Channel 0) or Register location associated with the I/O channel in the EXPANDED mode. The eight output references are for future use.

Table 2.18 REMOTE I/O DRIVER STATUS BYTE

INPUT	I/O REFERENCE	INFORMATION PROVIDED
1	10297 (1)	Input toggles every time new input data is transferred to the CPU.
2	IO298	Reserved
3	10299	Reserved
4	10300	Remote Parity Ø= Parity error in Remote I/O station. 1 = Remote parity good.
5	10301	Remote OK Ø= Fault in Remote System (Power supply failure, parity error, etc.) 1 = Normal operation, Remote I/O OK
6	10302	Link OK Ø= Error detected with communications between Remote I/O Driver and Receiver. 1 = Communications link good.
7	10303	Local OK Ø = Fault in Remote I/O Driver module. 1 = Remote I/O Driver operation normal.
8	100304	Heartbeat This input cycles from Ø to 1 (0/1/0/1, etc.), changing with each I/O scan when Remote I/O is operating normally. If any input status (4-7) is set to zero, cycling stops and the status will contain the last valid data received (Ø or 1).

(1) I/O references shown are typical, and are only used as an example.

Artisan Technology Group - Quality Instrumentation ... Guaranteed | (888) 88-SOURCE | www.artisantg.com

Status Indicators

There are four LED status indicators viewed through the faceplate lens. The four LEDs display the same status information as that indicated by the state of Inputs 4 through 7 in table 2.18. These indicators and their meanings are listed below in table 2.19 in the same order as they appear on the module faceplate.

Table 2.19 REMOTE I/O DRIVER STATUS INDICATORS

INDICATOR	DEFINITION
LOCAL OK	ON Remote I/O Driver module operating normally. OFF Fault in Remote I/O Driver.
LINK OK	ON Communications link between this module and Remote Receiver good. Of Communications error between this module and Remote Receiver.
REMOTE OK	ON Remote system is operating normally. OFF Fault exists in Remote I/O system. (Power supply failure, cable loose, module not seated properly, etc.
REMOTE PARITY	ON Remote system has no parity errors, operation normal, OFF Parity error detected in Remote I/O system, CPU will stop unless option, jumper on this module is set for CPU to RUN when error detected.

Option Jumpers

Several jumpers located on this module are used for configuration of various options necessary for system and module operation. Table 2.20 lists the factory and alternate settings for the Remote I/O Driver options.

Table 2.20 REMOTE I/O DRIVER OPTION SETTINGS

OPTION	FACTORY SETTING	OPTIONAL SETTING
Block Size	120 Inputs/120 Outputs	248 Inputs/248 Outputs
Baud Rate	57.6 Kb	UserSelected
Serial	Yes/Odd	Yes/Even or No
CPU Status on Communications Failure	STOP CPU	Allow CPU to RUN
Remote I/O Parity Error	STOP CPU	Allow CPU to RUN
Communications Link	Two Twisted Pair To 10,000 feet (3 Km)	RS-232 Modem Link

Artisan Technology Group - Quality Instrumentation ... Guaranteed | (888) 88-SOURCE | www.artisantg.com

Remote I/O Receiver

The Remote I/O Receiver module is the interface to the serial communications link for a Remote I/O station. It is physically located in the first rack in a Remote I/O station, normally in the left slot since the Remote I/O Receiver does not require an I/O address (there is no DIP switch on backplane adjacent to the left slot).

A Remote I/O Receiver connected to a Remote I/O Driver through a two twisted pair cable can be installed in any I/O rack. If connection to the Remote I/O station is to be through a communications link using RS-232 compatible modems, then the Remote I/O Receiver must be installed in a high capacity I/O rack.

a41067

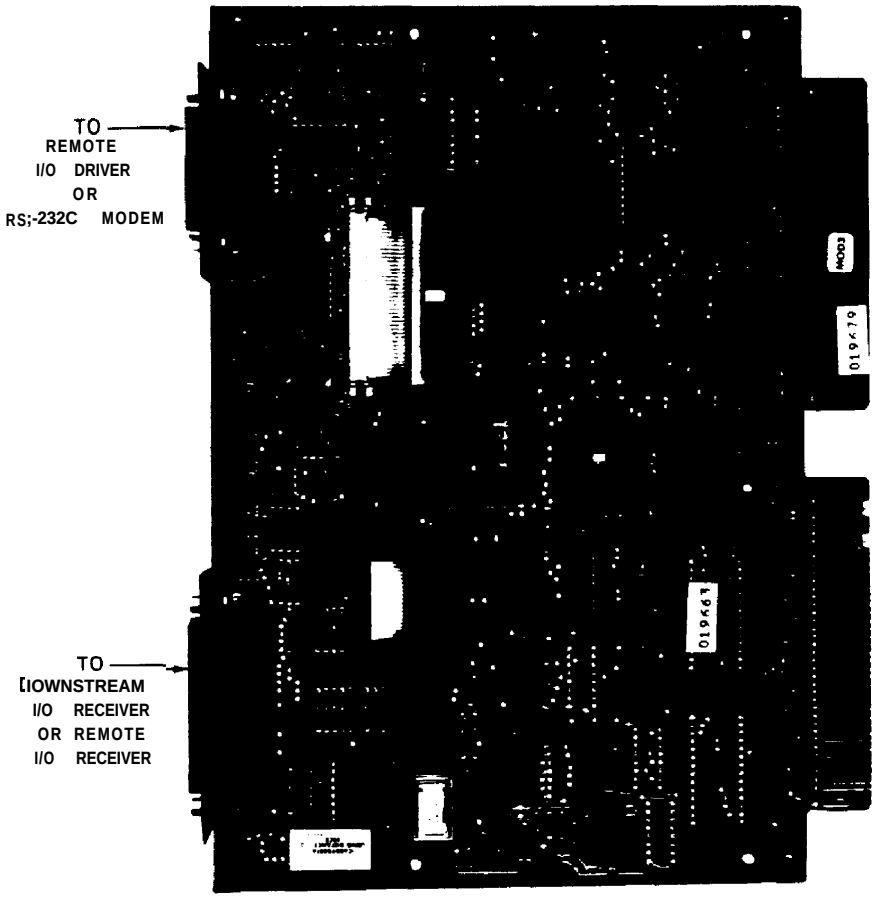

Figure 2.30 REMOTE I/O RECEIVER MODULE

Circuitry on this module converts output data from serial to parallel and converts input data from a parallel to a serial format: The Remote I/O Receiver also isolates the serial data cable from the backplane bus and provides error checking circuitry. If more than one I/O rack is required in a Remote I/O station, the additional racks are daisy chained to the Remote I/O Receiver through I/O Receivers or Advanced I/O Receivers.

Artisan Technology Group - Quality Instrumentation ... Guaranteed | (888) 88-SOURCE | www.artisantg.com

Connectors

A Remote I/O Receiver has two edge mounted D-type connectors. The top connector (25 pin) connects to a Remote I/O Driver at the opposite end of the serial communications link using a two twisted-pair cable or to a modem located no more than 50 feet (15 meters) from the Remote I/O Receiver.

The lower connector (37 pin) provides a connection through a 16-pair parallel bus cable to an I/O Receiver or Advanced I/O Receiver module located in the next downstream rack in a Remote I/O station. If no connection is to be made to the lower connector, the I/O chain signals must be terminated. This is done by reconfiguring three jumper plugs on the printed circuit board which performs the same function as reconfiguring the jumper pack and DIP shunts on an I/O Receiver or Advanced t/O Receiver module.

Status Indicators

The Remote I/O Receiver has four LED indicators visible through the faceplate lens. The legends on the faceplate lens are the same as those on the Remote I/O Driver.

Table 2.21 REMOTE I/O RECEIVER STATUS INDICATOR DEFINITIONS

INDICATOR		DEFINITION
LOCAL OK	ON	Remote I/O Driver module operating normally.
	OFF	Communications fallure or addressing difference between Local and Remote Stations.
LINK OK	ON	Communications link between this module and Remote I/O Driver established and valid.
	OFF	Communicat!ons failure between this module and Remote I/O Driver.
REMOTE OK	ON	Remote system Is operating normally.
	OFF	Fault in Remote I/O system. (Illegal address block, loose connection, power supply failure)
REMOTE PARITY	ON	Remote system operating normally with no parity errors.
	OFF	Parity error detected 1n Remote I/O system.

Option Jumpers

There are several circuit board jumpers on this module which are used for option selection and 1/0 chain signal termination. Jumpers are factory set prior to shipment and must agree with the Remote I/O Driver to which the Remote I/O receiver is connected. Table 2.22 lists the factory and alternate settings for the Remote I/O Receiver options.

Artisan Technology Group - Quality Instrumentation ... Guaranteed | (888) 88-SOURCE | www.artisantg.com

Table 2.22 REMOTE I/O RECEIVER OPTtONS

OPTION	FACTORY SETTING	CHOICES
Baud Rate	57.6 Kb	User selected
Parity	Yes/Odd	Yes/even or no
Communications Failure at Remote I/O	Turn all outputs Off	Hold all outputs at last state
I/O Chain Signals	I/O Chain Signals have continuity through this module.	Terminate I/O chain Signals at this module

Instructions for reconfiguring any of the circuit board jumpers to change options can be found in the applicable data sheet (see GEK-25367, Series Six Data Sheet manual) for this module. Jumper options are required when selecting the RS-232 option and are listed in the chapter on installation in this manual. In addition, there are jumpers reserved for future expansion or production testing and should not be changed.

AUXILIARY I/O SYSTEM

The Auxiliary I/O system allows the total number of I/O points in a Series Six Plus PLC system to be doubled. If an Auxiliary t/O module is inserted into slot 6 or 7 of a CPU rack, an l/O system functionally identical to the main I/O system can be originated at the CPU. The Auxiliary l/O chain is scanned in parallel with the Main I/O chain. The Auxiliary I/O chain does not increase the total CPU scan time.

The structure of the Auxiliary I/O system provides the Series Six Plus CPU with an additional 1000 inputs and 1000 outputs when operating in the NORMAL I/O mode of operation. Thus, the total I/O capacity of the Series Six Plus PLC when in the NORMAL I/O mode, with the Auxiliary l/O system selected is 2000 inputs and 2000 outputs.

If the Auxiliary I/O module and the EXPANDED I/O mode of operation have been selected, an additional 8000 Inputs and 8000 Outputs are available to the PLC system. This configuration provides a total I/O capacity of 16,000 real inputs and 16,000 real outputs.

The Auxiliary I/O module can be used in either a Series Six Plus CPU rack, or in a Series Six model 6000 CPU rack. When used with the Series Six model 6000 CPU, the maximum I/O is 2000 Inputs and 2000 Outputs. A group of 4 DIP shunts must be inserted in one of two locations, determined by which CPU the module is to be used with, either Series Six Plus or Series Six model 6000.

All information pertaining to use of Input and Output modules, I/O interface modules, cable type and distance allowed between racks and stations is applicable when configuring ***an Auxiliary I/O system. Inputs and Outputs in the Auxiliary I/O chain can be overridden as in the Main I/O chain, (with the Expanded II instruction set), when in the Normal mode. When in Expanded I/O mode, only Channel 8 (AI/AO) has overrides.***

Artisan Technology Group - Quality Instrumentation ... Guaranteed | (888) 88-SOURCE | www.artisantg.com

A standard I/O cable, catalog number IC600WDXXX (where XXX is a 3 digit number corresponding to the selected cable length), provides the connection to the Auxiliary I/O chain and is made to a connector located at the bottom of the faceplate of the module. The cable is connected from the Auxiliary I/O module, through the I/O cable, to the top connector on the I/O Receiver or Advanced I/O Receiver in the first I/O rack in the Auxiliary I/O chain.

b40762

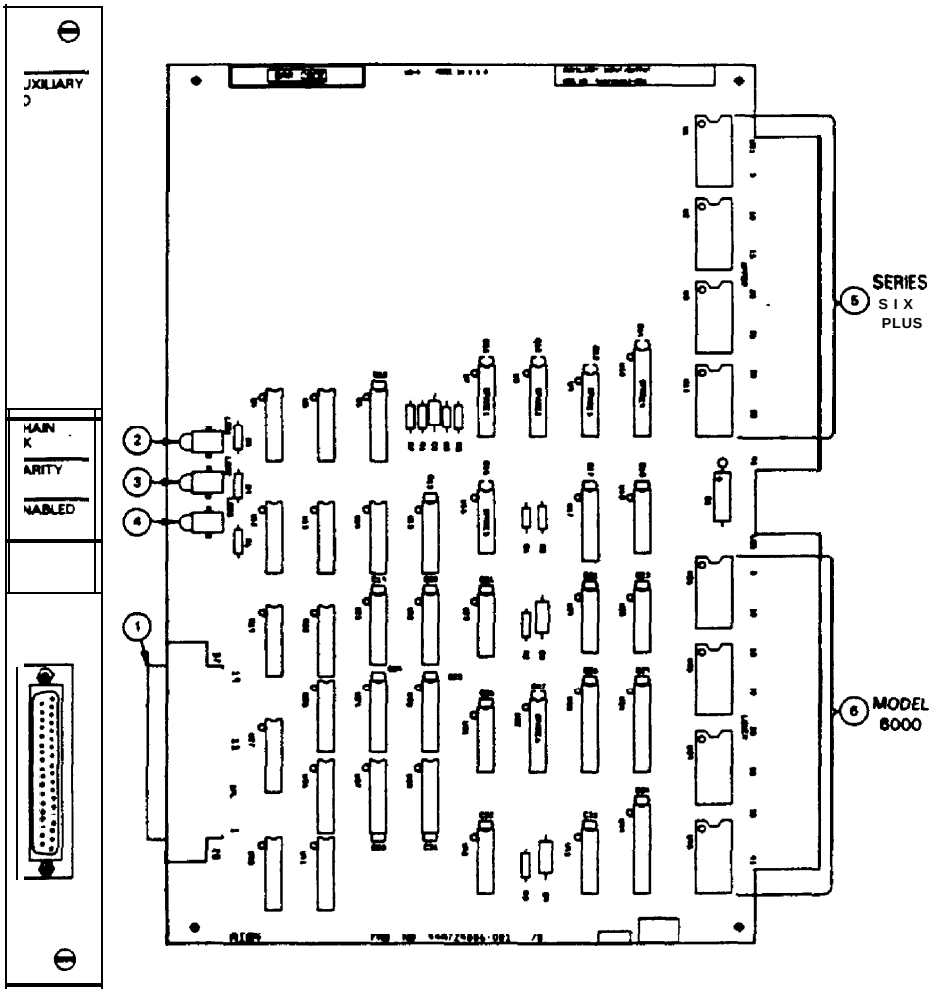

1. D-Type 37 pin Connector to Auxiliary I/O Chain connects to I/O Receiver or Advanced I/O Receiver in nearest I/O rack in auxiliary chain.
2. CHAIN OK LED
   - On: Continuity, power, and output data parity are OK at all I/O stations in the auxiliary chain.
   - Off: A continuity, power problem or output data parity error exists at one or more auxiliary chain I/O station(s).
3. PARITY LED
   - On: Input data parity is OK at the Auxiliary I/O module.
   - Off: Input data parity error exists.
4. ENABLED LED
   - On: The outputs are enabled. CPU is operating in the RUN ENABLED mode.
   - Off: The outputs are disabled. CPU in the RUN DISABLED or the STOP mode.
5. Shunt location A (Factory installed locat ion)
6. Shunt location B

Figure 2.31 AUXILIARY I/O MODULE BOARD LAYOUT

Artisan Technology Group - Quality Instrumentation ... Guaranteed | (888) 88-SOURCE | www.artisantg.com

WORKMASTER COMPUTER TO SERIES SIX PLUS PLC CONNECTIONS

The Workmaster computer can communicate with a Series Six Plus PLC using either a parallel or serial version of the Logicmaster 6 software. The methods of connection from the Workmaster computer to the Series Six Plus PLC are described in the following paragraphs.

Workmaster to Series Six Interface Adaptor Boards

This is a two-board option which provides high speed parallel communications between the Series Six Plus PLC and the Workmaster computer through the Logicmaster 6 software. One board is the WorkmasterlSeries Six Interface board (IC640BSS303) which contains the circuitry necessary to format and transfer data between a Workmaster computer and a Series Six Plus PLC. This board requires a long slot for instaflation.

The other board in the set is the Workmaster/Series Six Terminator board (IC640BLD304), which contains the circuitry to terminate and protect data lines between the Series Six Plus PLC and the Workmaster computer. This board requires a short slot for installation. There are two DIP rocker switches on the board which must be configured as described below.

These two boards are connected together inside of the Workmaster computer by a 34-wire ribbon cable. The boards can-be installed in any 2 unused slots in the Workmaster computer with the requirements that the full-size board must be installed in a long slot and the half-size card be installed close enough for the ribbon cable to reach. These boards should be installed as instructed in the Workmaster Guide to Operations Manual, GEK-25373.

Connection to I/O Control or I/O Receiver Modules

The factory setting for the DIP switches on the Terminator board is ALL of the switches set to the OFF (open) position. This is the correct setting for connecting a Workmaster computer to the I/O Control module in the CPU rack or to an I/O Receiver or Advanced I/O Receiver in a CPU station or Local I/O station. The maximum distance for this type of connection is 10 feet (3 meters).

Connection to an I/O Transmitter Module

When ALL of the switches are set to the ON (closed) position, the parallel I/O bus is properly terminated for long distance communications through an I/O Transmitter module up to 500 feet (150 meters) away. With this configuration, the I/O Transmitter module must be dedicated to communicating with the Workmaster computer.

WARNING

All of the DIP switches on the Terminator Board must be set properly as described above. Failure to do so may result in the Series Six Plus CPU stopping in an incorrect state or incorrect operation of the I/O bus which may cause the outputs to be directed to an incorrect state.

Artisan Technology Group - Quality Instrumentation ... Guaranteed | (888) 88-SOURCE | www.artisantg.com

The valid connections for the Workmaster computer to the parallel I/O chain are illustrated in figure 2.32.

a41085

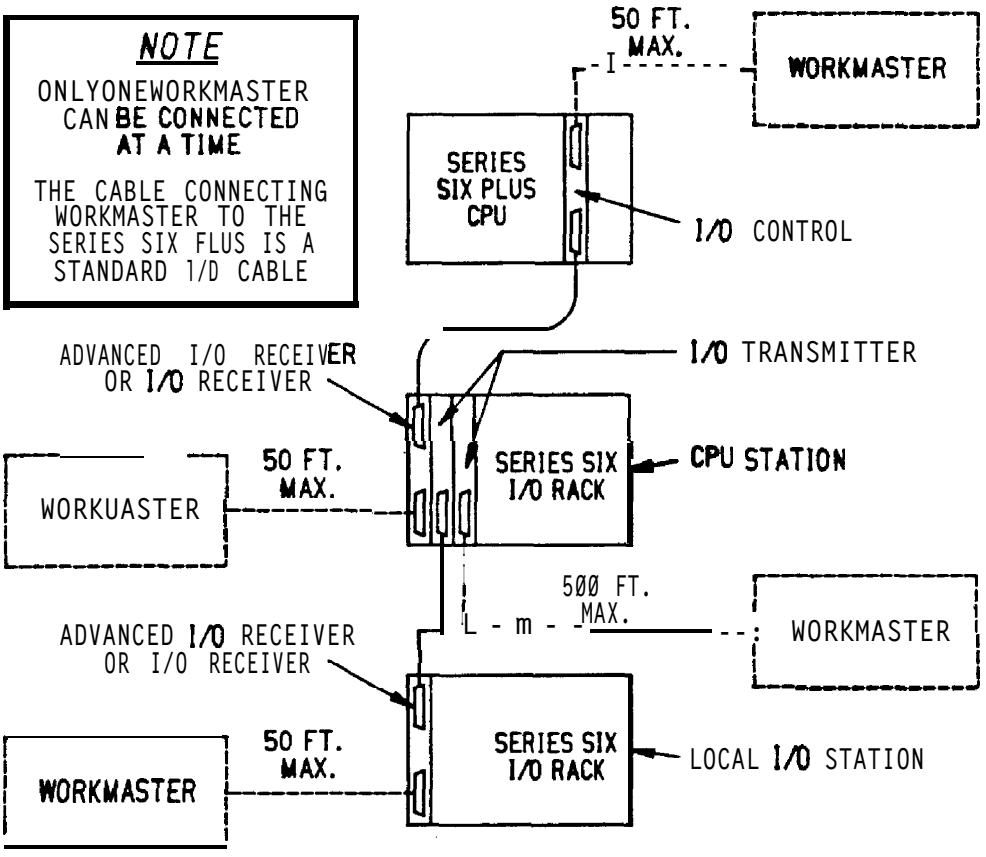

Figure 2.32 WORKMASTER COMPUTER CONNECTIONS TO THE SERIES SIX PLUS PLC

Connecting Cable

The cable to be used for connecting the Workmaster computer to a Series Six Plus PLC is a standard parallel I/O bus cable. Following is a list of catalog numbers for these cables.

CATALOG NUMBER	CABLE LENGTH
IC600WD002	2 feet (0.6 meters)
IC600WD005	5 feet (1.5 meters)
IC600WD010	10 feet (3.0 meters)
IC600WD025	25 feet (7.5 meters)
IC600CJD050	50 feet (15.0 meters)
IC600WD100 (1)	100 feet (30.0 meters)
IC600WDZ00 (1)	200 feet (60.0 meters)
IC600CJD500 (1)	500 feet (150,0 meters)

(1) To be used only for direct connection to a dedicated I/O Transmitter module in a Series Six Plus PLC system.

Artisan Technology Group - Quality Instrumentation ... Guaranteed | (888) 88-SOURCE | www.artisantg.com

Connections Using the Serial Version of Logicmaster 6

The Workmaster computer can also communicate with a Series Six Plus PLC using the serial version of Logicmaster 6 software. The Workmaster computer must be connected to the CCM2 in the Series Six Plus CPU rack or to a CCM3 operating in the CCM2 mode. The CCM3 catalog number must be IC6OOCB517C or later.

The CCM2 must be configured for Workmaster protocol. Cable connection to the CCM2 is to the COM1 port on the Workmaster computer. The location of the COM1 port is determined by the type of communication to be used.

When point-to-point communications over distances less than 50 feet (15.0 meters) is used, connection at the Workmaster computer is made to the 9-pin connector on the Combination Adapter card.

If point-to-point communications over distances greater than 50 feet or multidrop communications are used, the Asynchronous/Joystick card must be used in the Workmaster computer. When this configuration is used, the Combination Adapter card must be configured as COM2, and the Asynchronous/Joystick card configured as COM1.

For more detailed information on installation and configuration of the above cards, refer to the Logicmaster 6 User's Manual, GEK-25379.

USING THE CIMSTAR I COMPUTER WITH A SERIES SIX PLUS PLC

The CIMSTAR I computer can also be used as the programming device with a Series Six Plus PLC. It can run either the parallel or serial version of the Logicmaster 6 software. The serial version does not require any additional equipment added to the CIMSTAR I computer. The parallel version requires installation of an additional board set. Both versions require GE-DOS version 1 or later, which is equivalent to MS-DOS version 3.2. This version of DOS is supplied with the computer. Refer to GEK-25379, the Logicmaster 6 Programming and Documentation Software User's manual, Chapter 2 and Appendix A, and GEK-90527, the CIMSTAR I Industrial Computer Reference Manual, for further information on the CIMSTAR I computer hardware requirements and use.

Parallel Version of Logicmaster 6 Software

The parallel version communicates with a Series Six Plus PLC through a standard I/O interface cable, as with the Workmaster computer. The following board set must be installed in the CIMSTAR I computer for parallel communications with a Series Six Plus PLC:

- A Workmaster/Series Six interface board (IC640BSS303)
- A Workmaster/Series Six Terminator board (IC640BLD304)

This board set was previously described under "Workmaster to Series Six Interface Adapter Boards".

Artisan Technology Group - Quality Instrumentation ... Guaranteed | (888) 88-SOURCE | www.artisantg.com

Serial Version of Logicmaster 6 Software

The serial version, when installed in a CIMSTAR I computer, communicates with a Series Six Plus PLC over a serial communications channel to a CCM module in the Series Six Plus PLC. Communication is possible over a long distance using a wide range of baud rates, either with or without modems. The system can communicate with a single CCM module and CPU, or be used in a multi-drop configuration having up to eight CCM modules and CPUs.

PROGRAMMING A SERIES SIX PLUS PLC WITH AN IBM PC

The IBM PC version of the Logicmaster 6 software can be used to program a Series Six Plus PLC when installed in an IBM PC, IBM PC-XT, or IBM PC-AT computer that meets the following requirements:

- 640K of RAM memory
- PC-DOS version 2.1 or later for the IBM PC and PC-XT. PC-DOS version 3.1 or later for the IBM PC-AT.
- Either a color or monographics monitor adapter card. The software will also support the Enhanced Graphics Adaptor (EGA) card.

The Logicmaster 6 software for the IBM PC version is available as a set of three 5.25 inch 360K diskettes. Performance of the software with other versions of DOS or on other IBM PC-compatible computers is not guaranteed. The system supports the IBM monochrome adaptor board and the asynchronous communications adaptor board. It does not support serial communications adaptors based on the 8250 UART.

An IBM PC-based Logicmaster 6 system communicates with a Series Six Plus PLC through the serial ports, to a CCM module in the Series Six Plus CPU rack. The IBM PC version of Logicmaster 6 software communicates and functions in the same way as does the serial version for the Workmaster computer.

REDUNDANT PROCESSOR UNIT

The Redundant Processor Unit (RPU) monitors the CPU and I/O. When the RPU detects a failure of the CPU or I/O, it switches to a backup CPU and (optionally) to a backup I/O chain. For more information about the module, refer to the Redundant Processor Manual (GEK-25366).

I/O Addressinq for the RPU

Originally, the RPU used pre-assigned inputs and outputs in the Main I/O Status Tables. These inputs and outputs could not be changed. The upgraded version of the RPU uses hardware-selectable I/O addresses.

IBM is a registered trademark of International Business Machines Incorporated

Artisan Technology Group - Quality Instrumentation ... Guaranteed | (888) 88-SOURCE | www.artisantg.com

The older type of RPU should not be used in a system with Expanded I/O addressing. The older RPU uses 8 outputs (O1017 through O1024) to control its operations. Setting O1017 in the Master will cause transfer to the Back-up CPU (if it is available). If O1022 is set, outputs from the Main I/O Status Tables and the Override Table are transferred from the Master to the Back-up. If O1023 is set, register R0254 is transferred from the Back-up to the main CPU. If O1024 is set, a block of registers starting at the address specified by the value in register R0255, and ending at the value in register R0256 will be transferred from the Master to the Back-up. The 8 inputs (I1017 through I1024) and 8 outputs O1017 through O1024) are always mapped into the Main I/O Status Table. Of the 8 inputs, only input 1024 is used. It is set to "1" if the associated CPU is the backup.

Only the upgraded model RPU should be used in an Expanded I/O system. In Expanded addressing, an I/O Transmitter Module in either channel 0 or channel 1 will write data into the references formerly assigned only to the RPU. For example, for channel 0, the status of the I/O Transmitter module maps into Main I/O at addresses I1017 through I1024. However, I1024 is the input normally used by the RPU to specify the end of the register block to be transferred from the Main CPU to the Back-up CPU. The upgraded model RPU features jumper-selectable addressing. This allows greater memory access, and permits assignment of non-conflicting I/O addresses to the RPU.

Program References for the I/O Transmitter Module

If the Expanded mode is enabled, the module uses the references listed below. If Expanded mode is disabled, the module operates without the additional diagnostics, and does not use any I/O references.

Channel Return Status Memory Locations

MAIN I/O CHAIN		AUXILIARY I/O CHAIN	
Channel	Location	Channel	Location
0	I1017-I1024	8	R128 (high byte)
1	R256 (high byte)	9	R1280
2	R384	A	R1408
3	R512	B	R1536
4	R640	C	R1664
5	R768	D	R1792
6	R896	E	R1920
7	R1024	F	R2048

Expanded Addressing for a System with an RPU

Formerly, the Redundant Processor Unit was required to use input I1024, outputs O1017, O1022, O1023, and O1024, and registers R254-256. Referring to the list above, you can see that there is a conflict with the channel status return memory locations for channels 1 and 2. Using channel 0 or 1 results in information from the I/O Transmitter module on that channel being written into references assigned to the RPU. To avoid this conflict, a system with Expanded I/O addressing should use the enhanced version of the RPU.

Artisan Technology Group - Quality Instrumentation ... Guaranteed | (888) 88-SOURCE | www.artisantg.com

CHAPTER 3
INSTALLATION INSTRUCTIONS FOR THE SERIES SIX'" PLUS PROGRAMMABLE LOGIC CONTROLLER

INTRODUCTiON

This chapter contains information which will aid in installing the Series Six Plus Programmable Logic Controller and preparing the system for use, Included are instructions for unpacking/packing, inspecting, installing in a rack or panel, setting internal switches, and connecting cables. *At the end of this chapter is a start-up procedure for the Series Six Plus CPU to be followed when bringing up a new CPU for the first time.*

QUALITY CONTROL

Each Series Six Plus PLC undergoes a thorough quality control inspection and extensive system testing before being shipped. Each part of a system undergoes environmental and operational tests before leaving the factory.

PACKAGING

The method of packing and shipping the components of a Series Six Plus PLC system are outlined in this section.

- CPU racks are shipped to include the following modules and other components: Power Supply, I/O Control, and Arithmetic Control modules, I/O Terminator plug, board extraction/insertion tool, and rack mounting brackets and screws. The power supply, I/O Control module and Arithmetic Control modules are seated in their proper slots in the rack. The ribbon cable for connecting the Arithmetic Control to the Logic Control modules is connected to the Arithmetic Control module. Blank faceplates must be ordered separately for the remaining slots and are shipped separately.

- The CPU rack is inserted into 2 halves of foam plastic sections. This is then placed in an antistatic plastic bag along with the rack mounting brackets, hardware for mounting the brackets, a printed circuit board extraction/insertion tool, an I/O Terminator plug and the Series Six Plus User's Manual. This package is then placed in a shipping container.

- The Combined Memory, Logic Control and any optional modules are shipped in a separate container. Each module is placed in the bottom of a two-section foam plastic package. Two inserts are provided, one for the printed circuit board and one for its faceplate. The top section is added and this package is inserted into a sleeve. Either 2, 5 or 10 module packages are then placed in a shipping container.

- I/O racks are shipped with only the power supply in place. The I/O racks and I/O modules are packaged the same as the CPU rack and modules.

Artisan Technology Group - Quality Instrumentation ... Guaranteed | (888) 88-SOURCE | www.artisantg.com

The Workmaster or Cimstar I industrial computer is packed in a separate shipping container. It is recommended that the shipping containers and all packing material be saved in the event that it becomes necessary to transport or ship any part of the system.

VISUAL INSPECTION

Upon receiving your Series Six Plus PLC system, carefully inspect all shipping containers for damage during shipping. If any part of the system is damaged, notify the carrier immediately. The damaged shipping container should be saved as evidence for inspection by the carrier.

It is the responsibility of the consignee to register a claim with the carrier for damage incurred during shipment. However, GE Fanuc – NA will fully cooperate with the customer should such an action be necessary.

PREINSTALLATION CHECK

After unpacking the Series Six Plus CPU and I/O racks, all modules, the Workmaster computer, and any peripherals that have been ordered as part of a system, it is recommended that serial numbers of the CPU, Workmaster computer, and any peripherals be recorded. The serial numbers are required if Product Service should need to be contacted for any reason during the warranty period of the equipment.

Verify that all components of the system have been received and that they agree with your order, If the system received does not agree with your order call your PtC Distributor or GE Fanuc – NA sales representative for further instructions.

RACK INSTALLATION

The Series Six Plus CPU can be rack, panel or wall mounted. A set of mounting brackets is included with each rack and can be mounted on either the front or rear of each rack. The method for mounting the brackets is determined by the system mounting configuration. Dimensions and placement of the mounting brackets for racks are shown in figures 3.1 and 3.2.

Artisan Technology Group - Quality Instrumentation ... Guaranteed | (888) 88-SOURCE | www.artisantg.com

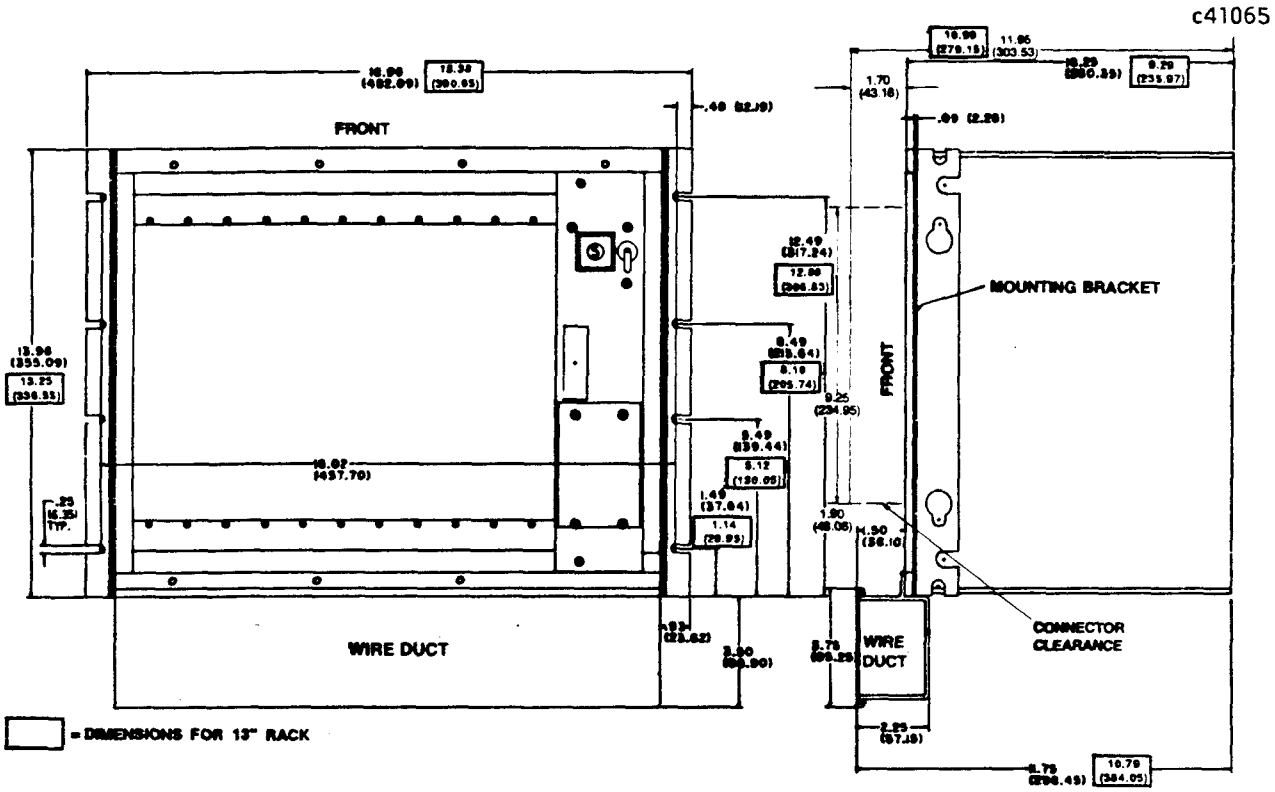

Figure 3.1 RACK MOUNTING (19" RACK)

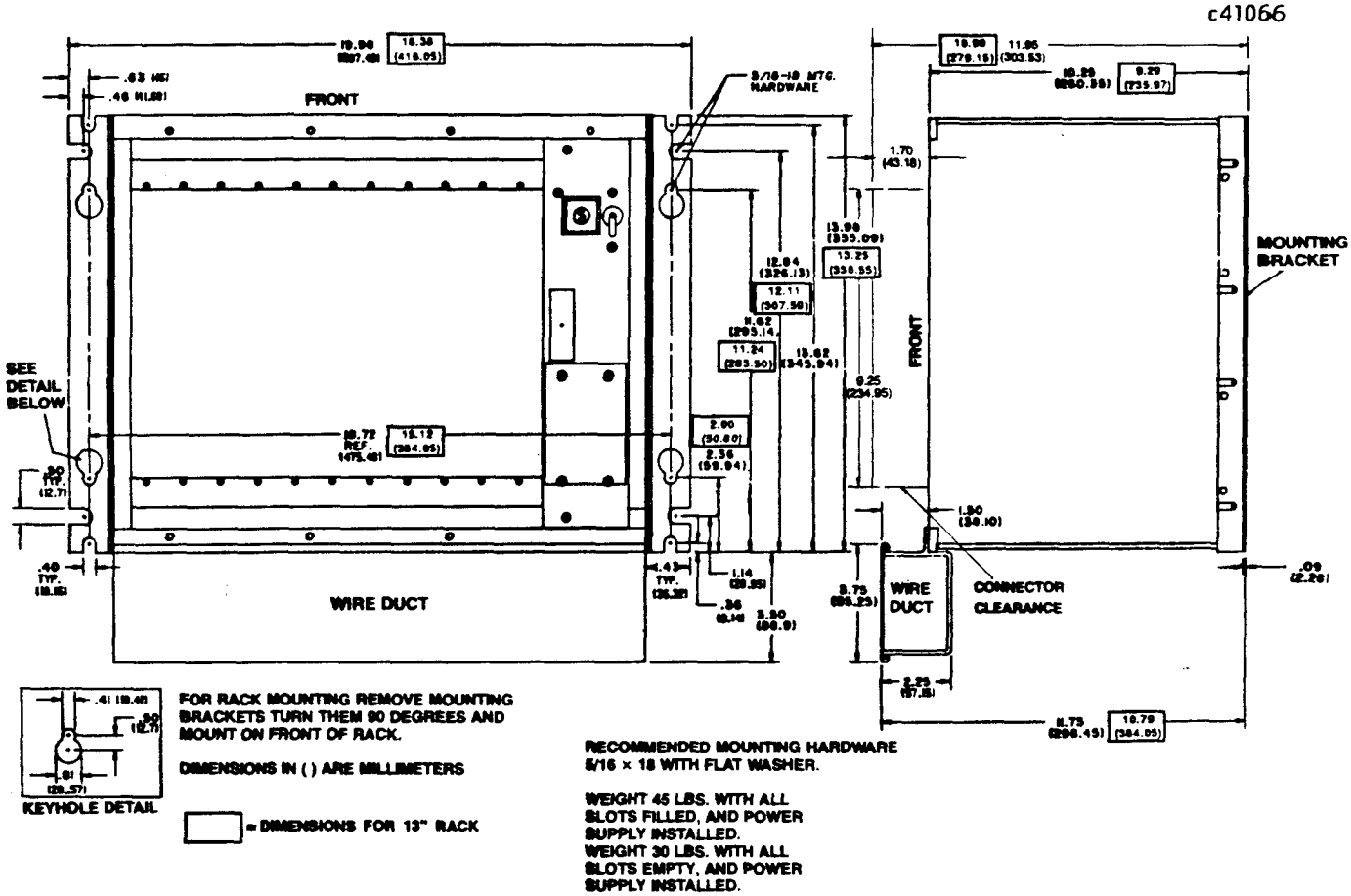

Figure 3.2 WALL OR PANEL MOUNTING (19" RACK)

Artisan Technology Group - Quality Instrumentation ... Guaranteed | (888) 88-SOURCE | www.artisantg.com

EXTRACTION/INSERTION TOOL

The printed circuit board extraction/insertion tool (board puller), Catalog No. IC600MA504 included with your Series Six Plus CPU should always be used when installing or removing a module. The boards in the CPU require an insertion force of about 50 lbs. (22.68 Kg) and the I/O boards require about 25 lbs. (11.34 Kg). Use of the extraction/insertion tool should alleviate any problems of possible board damage which could be caused by hand insertion or removal. Refer to figure 3.3 for identifying features of this tool.

a41115

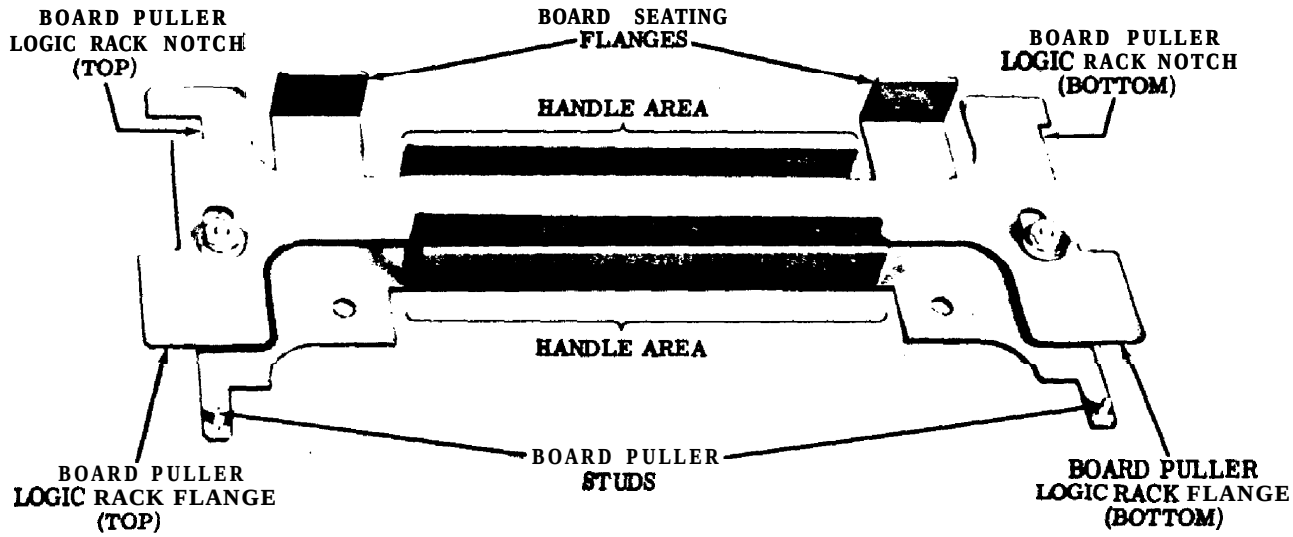

Figure 3.3 EXTRACTION/INSERTION TOOL

NOTE

It is recommended that power to any rack be turned off before attempting to install or remove any printed circuit board.

Artisan Technology Group - Quality Instrumentation ... Guaranteed | (888) 88-SOURCE | www.artisantg.com

Inserting a Printed Circuit Board

The following instructions should be followed when inserting a printed circuit board into its slot in a rack.

- **Grasp the board firmly with your hand and insert it into the cardguide.**
- **Align the board with the connector(s) on the rack backplane and slide it towards the connector(s) until it has started to seat.**
- **insert the board puller Logic Rack Notch (Top) into the short siot beside the top of the solder side of the board. Insert the Logic Rack Notch (Bottom) into the short slot beside the bottom of the solder side of the board. See figure 3.4 for proper toof positioning for insertion of a board.**
- **Grasp the handle area of the board puller with either hand and squeeze it until you feel the board seat. Visually inspect the board to be sure it has seated properly. Remove the tool.**

a42067

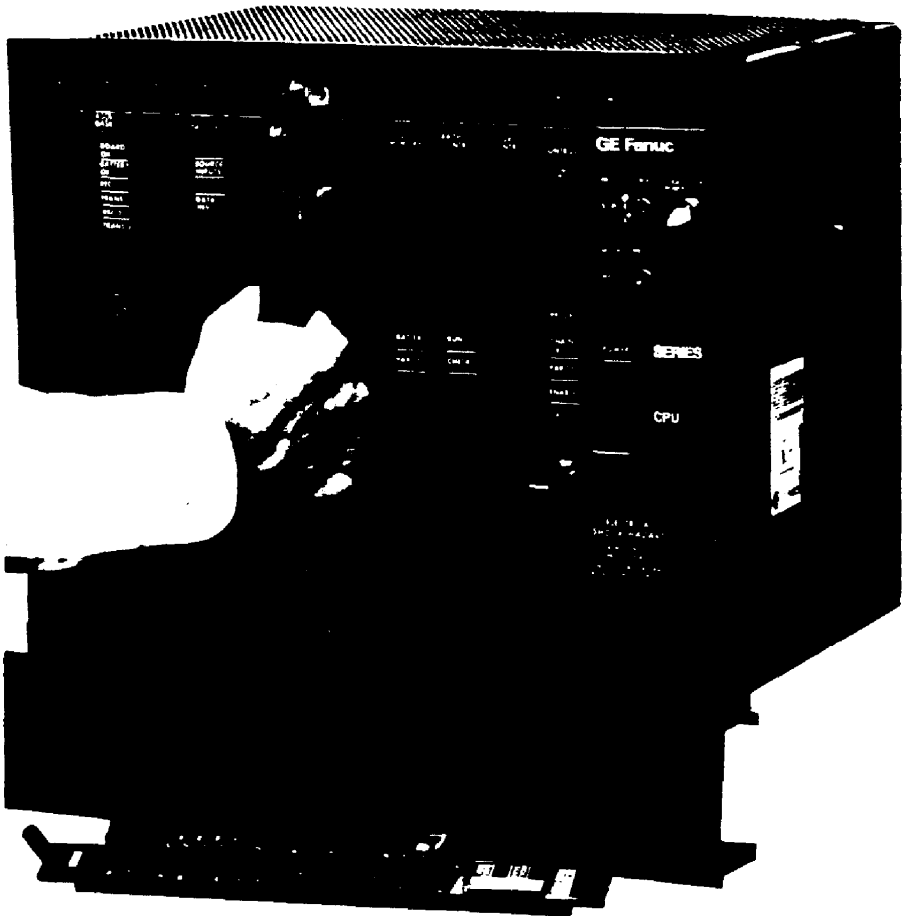

Figure 3.4 POSITION OF EXTRACTION/INSERTION TOOL FOR BOARD INSERTION

Artisan Technology Group - Quality Instrumentation ... Guaranteed | (888) 88-SOURCE | www.artisantg.com

Removing a Printed circuit Board

The following instructions should be followed for proper removal of a printed circuit board from its slot.

- **Insert the board puller studs into the printed circuit board from the solder side of the board. Ensure that the board puller surface is flat against the printed circuit board. The board puller is now 180 degrees reversed from the position for inserting a board. See figure 3.5 which shows proper positioning of the tool.**

- **Grasp the handle area with either hand and squeeze it. The board should break loose from the connectors and set loose in the cardguides.**

- **Remove the board puller and slide the board out of its slot. Handle the board carefully.**

a41080



Figure 3.5 POSITIONING THE EXTRACTION/INSERTION TOOL FOR BOARD REMOVAL

MODULE INSTALLATION

The modules for your system should now be installed in their proper slots in the CPU and I/O racks. Before installation some of the modules may require configuration of switches or jumpers. Figure 3.6 is provided as a guide to proper module location in the CPU rack.

Artisan Technology Group - Quality Instrumentation ... Guaranteed | (888) 88-SOURCE | www.artisantg.com

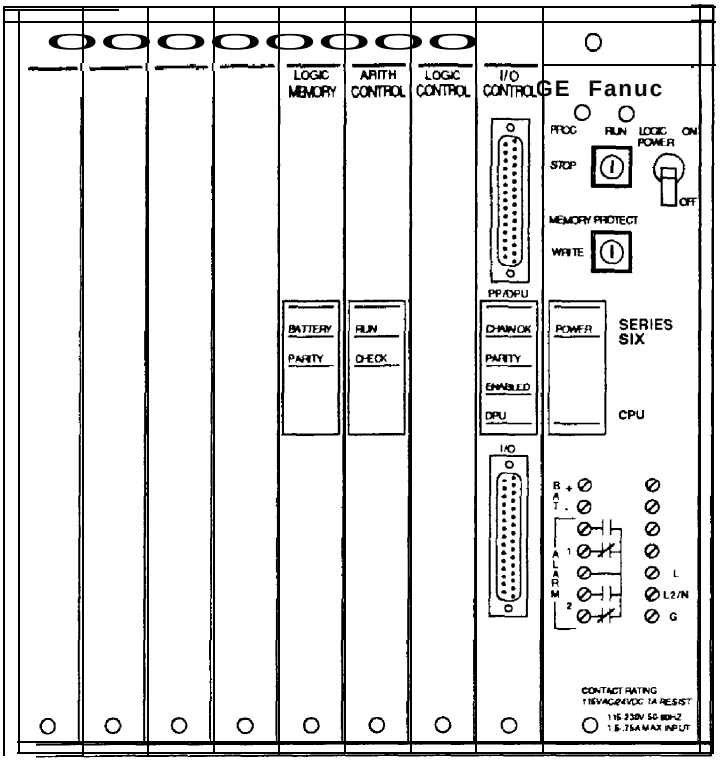

c42214
c42218

13" CPU RACK

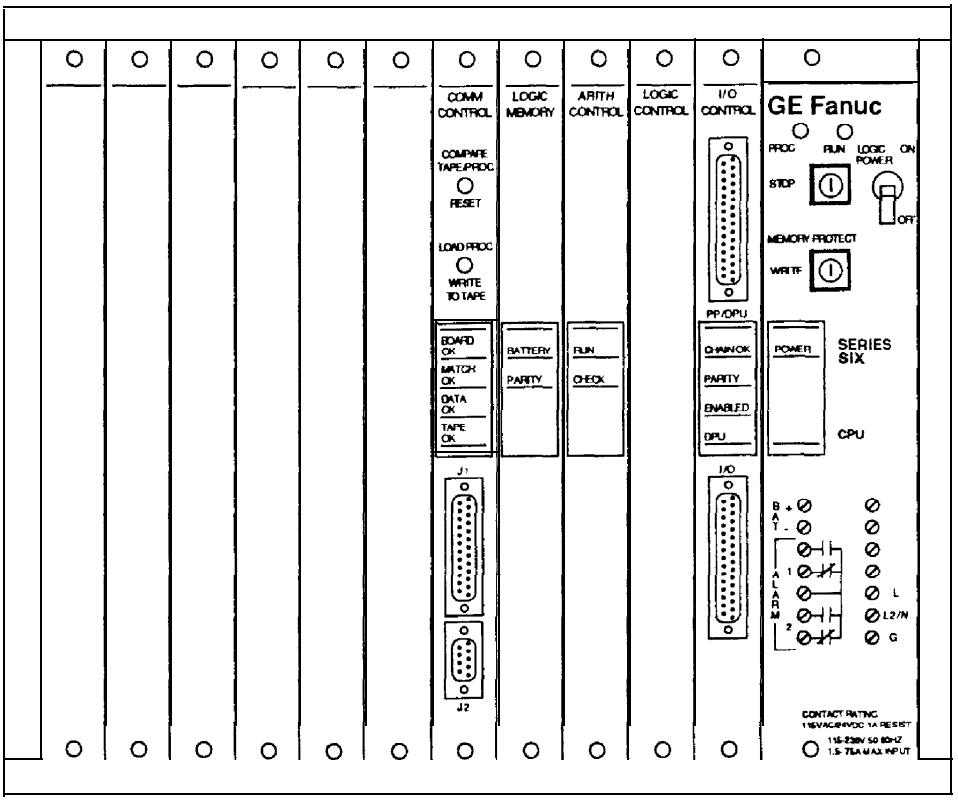

19" CPU RACK

Figure 3.6 CPU MODULE LOCATION GUIDE

Artisan Technology Group - Quality Instrumentation ... Guaranteed | (888) 88-SOURCE | www.artisantg.com

Combined Memory Module

The Combined Memory module for the Series Six Plus PLC combines the functions of internal memory, register memory and logic memory on one module. The Combined Memory module, should be unpacked and removed from its sleeve. Remove the blank faceplate (if in place) from the slot where the module is to be installed. The Combined Memory module should then be inserted into slot 4, which is immediately to the left of the Arithmetic Control module. After installing the module, install the faceplate, which is imprinted with the legend LOGIC MEMORY. The Combined Memory module is a required option, and is available in 6 different versions as shown below in table 3.1. The Combined Memory modules used in the Series Six model 60 PLC (IC600CM552 and IC600CM554) can also be used in a Series Six Plus PLC, but do not provide parity checking.

Table 3.1 COMBINED MEMORY MODULES

CATALOG NUMBER	MEMORY TYPE		TOTAL MEMORY
	LOGIC	REGISTER	
IC600LX605	4	1	5
IC600LX612	4	8	12
IC600LX616	8	8	16
IC600LX624	16	8	24
IC600LX648	32	16	48
IC600LX680	64	16	80

Battery Installation

Before installing a memory module in a CPU rack, the Lithium-Manganese Dioxide battery must be connected unless an external auxiliary back-up battery is to be used. These modules are shipped from the factory with the battery connector disconnected from the battery. When connecting a battery, the following procedure is recommended. Refer to figure 3.7, which shows a mounted, connected battery.

- **The battery mounting location is located at the bottom front of the memory module on the component side of the module.**
- **If the battery is not mounted, firmly place it in its mounting clip with the cable end facing toward the battery connectors.**
- **Connect the battery cable to one of the battery connectors.**
- **The memory module is now ready for installation into the CPU rack.**

Artisan Technology Group - Quality Instrumentation ... Guaranteed | (888) 88-SOURCE | www.artisantg.com

External Auxiliary Battery Selection

If an auxiliary back-up battery is to be used with your system, a jumper on the board must be properly configured. This jumper is JP6 and is located next to the Lithium battery. Factory default is – no auxiliary battery present (JP6 over pins 1 and 2). To change the selection to auxiliary battery present, place JP6 over pins 2 and 3. In order to use this feature, the user must supply a battery with the proper voltage (6 to 28 V dc) connected to the auxiliary battery terminals on the power supply terminal block.

a42221

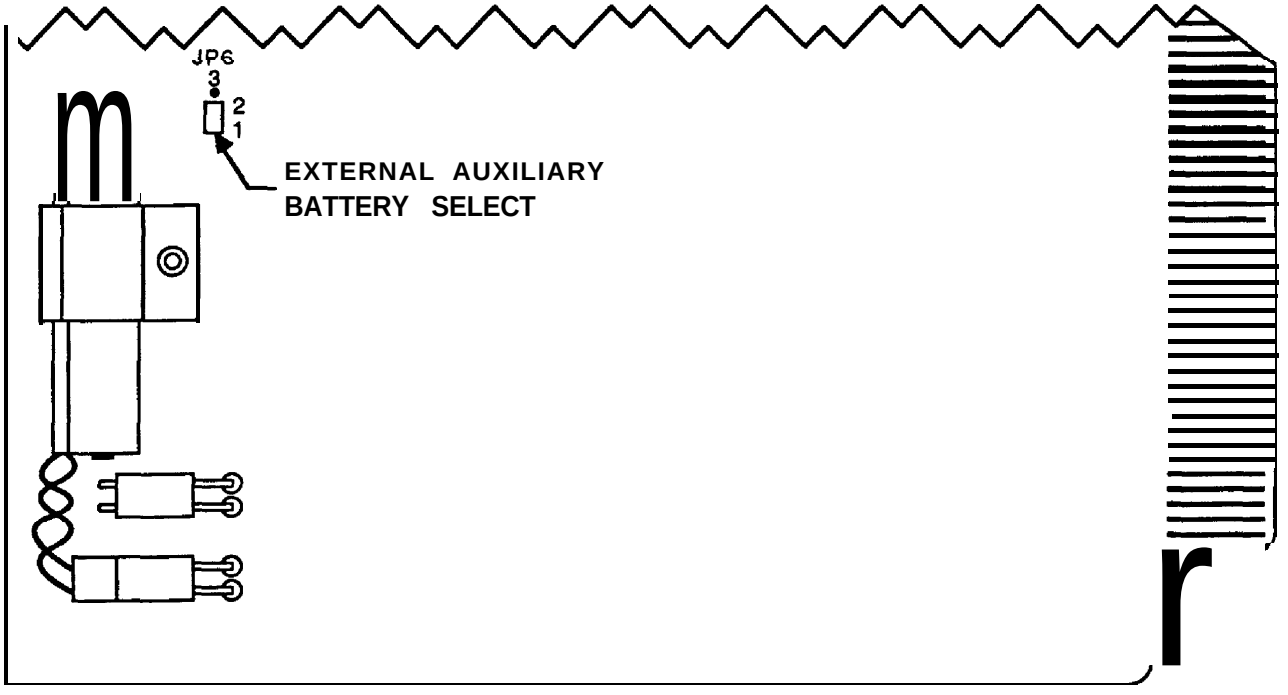

Figure 3.7 MEMORY BOARD BATTERY CONNECTiON

CAUTION

Relatively small amounts of excess charge can cause very intense electrostatic fields in metal-oxide-semiconductor (MOS) devices, damaging their gate structure. Avoid handling the circuit board under conditions favoring the buildup of static electricity. Failure to observe this caution could result in the destruction of the CMOS RAM devices in this module.

Artisan Technology Group - Quality Instrumentation ... Guaranteed | (888) 88-SOURCE | www.artisantg.com

CAUTION

Do not allow the bottom of a module to come into contact with a conductive (metal) surface when the board cover is removed. Failure to observe this caution could result in the discharge of the non-rechargeable lithium battery and the loss of memory contents.

When installing a Combined Memory module or any module, position the component side of the board to your right (towards the CPU power supply). Figure 3.8 shows proper orientation of a printed circuit board.

a41136

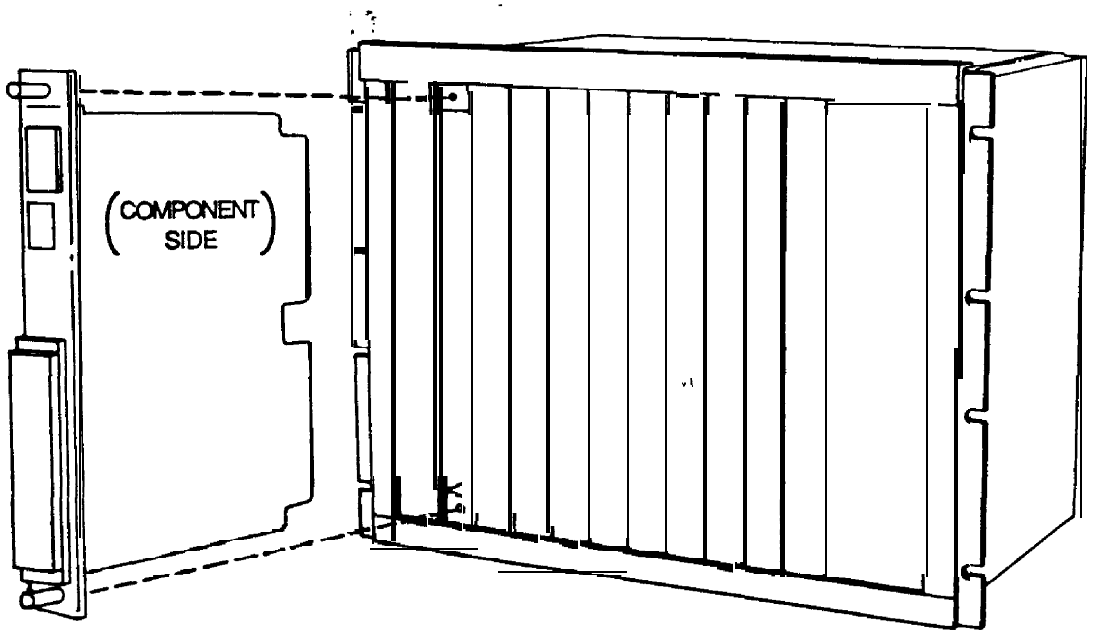

NOTE

Proper orientation of printed circuit boards is with component side towards the power supply.

Figure 3.8 PRINTED CIRCUIT BOARD ORIENTATION IN A RACK

Install the faceplate by placing the faceplate in the proper position and while pushing in, turn the quarter-turn thumbscrew clockwise until it feels secure.

Artisan Technology Group - Quality Instrumentation ... Guaranteed | (888) 88-SOURCE | www.artisantg.com

Arithmetic Control Module
Logic Control Module – Advanced, Expanded, or Expanded II

None of these modules have any devices needing user configuration. The selected Logic Control module should be installed in slot 2, which is the second slot to the left of the power supply.

The Arithmetic Control module should be installed in slot 3, immediately to the left of the Logic Control module.

A short length of ribbon cable is used to interconnect these two modules through sockets on the lower front edge of each printed-circuit board. Refer to figure 3.9. Ensure that this cable is in place and that the connectors are seated properly.

NOTE

Operation of the system without the ribbon cable connected between the Arithmetic Control and Logic Control modules will result in unpredictable operation by the CPU.

a41079

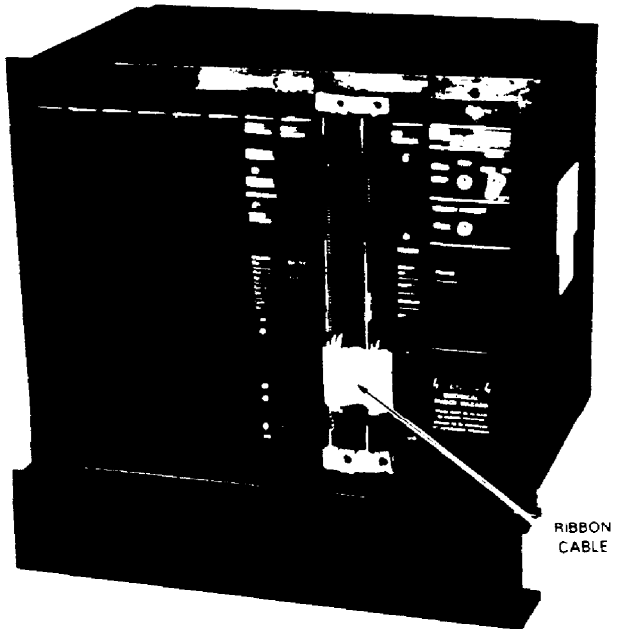

figure 3.9 LOGIC CONTROL TO ARITHMETIC CONTROL RIBBON CABLE

NOTE

To prevent unpredictable operation of your Series Six Plus CPU, the CPU should be powered-down before installing or removing either module or the connector.

Artisan Technology Group - Quality Instrumentation ... Guaranteed | (888) 88-SOURCE | www.artisantg.com

I/O Control Module

The I/O Control module should be inserted in slot 1, immediately to the left of the power supply. The I/O Control module contains three labeled jumper terminals, which are for selection of board options. These jumpers are located on the lower right of the component side of the printed circuit board (with component side towards you and LEDs and connectors to the left).

The jumper configuration and definitions are indicated in the following table. To change a configuration, move the jumper plug to the correct pins. Jumpers should be configured to conform to the requirements for a particular application.

Table 3.2 I/O CONTROL OPTION JUMPERS

JUMPER	POSITION	DEFINITION
B	A-B	DPU Present
B	A-C	DPU Not Present
E	D-E	DPU Fault Trips Alarm No. 1 and Alarm No. 2. CPU Stops
E	E-F	DPU Fault Trips Alarm No. 2. Provides an Advisory Indication.
H	G-H	Communications Control Fault Trips Alarm No. 1 and Alarm No. 2. CPU Stops.
H	H-J	Communications Control Fault Trips Alarm No. 2. Provides an Advisory Indication.

The I/O Control connects to an I/O Receiver or Advanced I/O Receiver in the first I/O rack in a CPU I/O station through a 16 pair parallel cable. Location of the 3 jumpers on the lower part of the board is shown below.

a41076

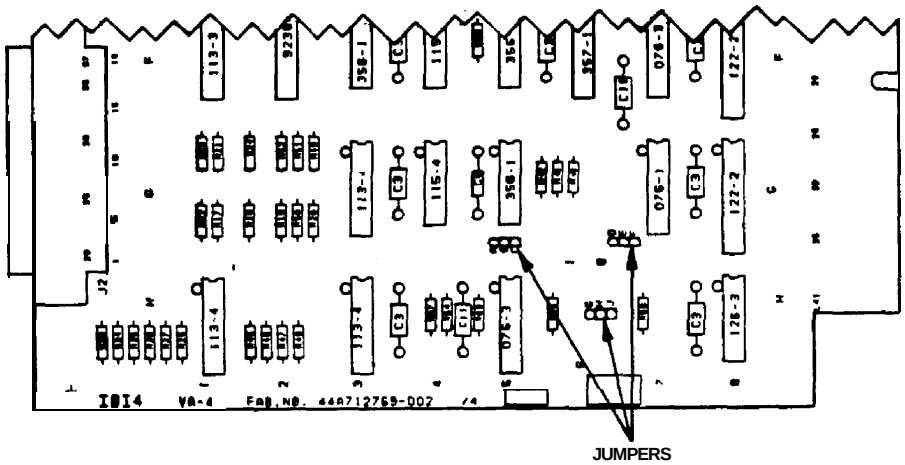

Figure 3.10 I/O CONTROL MODULE JUMPER LOCATION

Artisan Technology Group - Quality Instrumentation ... Guaranteed | (888) 88-SOURCE | www.artisantg.com

Auxiliary 1/O Module

The Auxiliary I/O module is available as an option and is required if an Auxiliary I/O chain is to be included in a Series Six Plus PLC system. The Auxiliary I/O module can be used in either a Series Six Plus CPU rack, or in a Series Six model 6000 CPU rack.

When used with the Series Six Plus PLC in the Expanded mode of operation, up to 8000 Inputs and 8000 Outputs are available on the Auxiliary I/O chain (in addition to the 8000 Inputs and 8000 Outputs on the Main I/O chain). When used with the Series Six model 6000 CPU, the maximum available I/O is 2000 Inputs and 2000 Outputs.

A group of 4 DIP shunts must be inserted in one of two locations, determined by which CPU the module is to be used with, either Series Six Plus or Series Six model 6000.

The Auxiliary I/O module can be installed in slot 5, 6 or 7 depending on whether or not the GEnet Factory LAN Series Six Network Interface 2-slot option is selected. If the LAN communications option is not selected, install the Auxiliary I/O module in slot 5. The Auxiliary I/O module connects to the first I/O rack in a CPU I/O station in the Auxiliary I/O chain through a standard 16-pair parallel bus cable.

Communication Control Modules

If a Communications Control Module, either CCM2 or CCM3, has been selected as an option, it should be installed in slot 5, immediately to the left of the Combined Memory module.

There are jumpers or DIP switches on the Communications Control Modules which should be configured to set operating parameters for the module. For complete details on configuration of any of the communications modules, refer to the applicable manual as listed below.

- CCM2 GEK-25364 Series Six Data Communications Manual
- CCM3 GEK-90505 Supplement to the Series Six Data Communications Manual

Artisan Technology Group - Quality Instrumentation ... Guaranteed | (888) 88-SOURCE | www.artisantg.com

CPU Power Supply

The CPU power supply, which is installed at the factory, has 2 terminal boards located on the lower part of the faceplate. Refer to figure 3.11 which is an illustration of the terminal boards and their connections. Remove the protective cover and make the following connect ions.

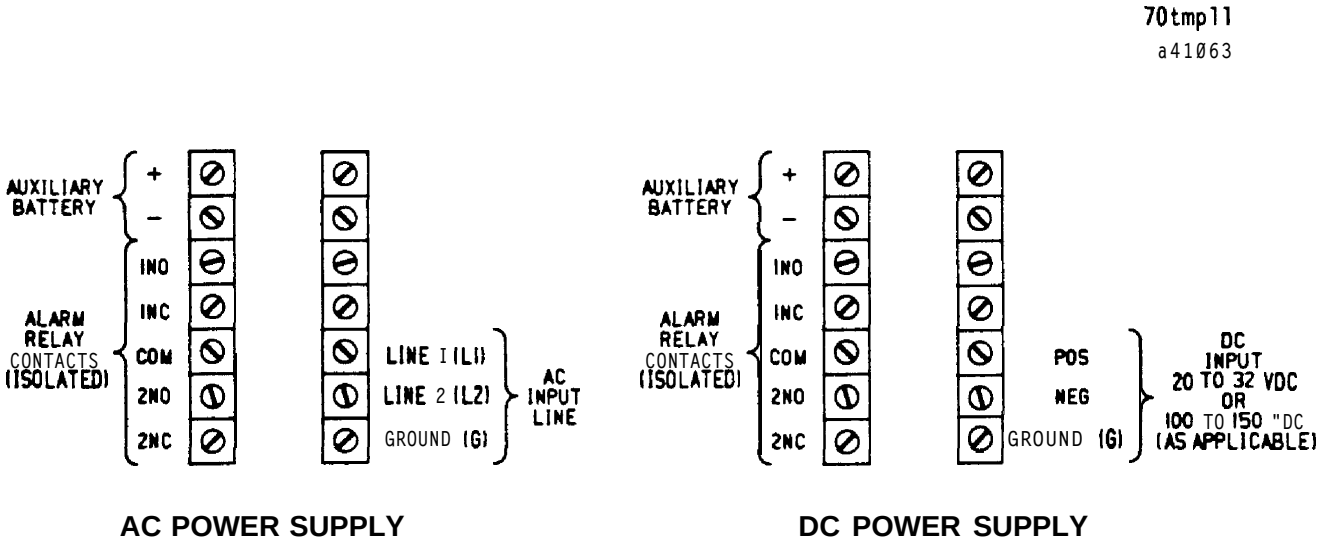

AC POWER SUPPLY DC POWER SUPPLY

Figure 3.11 CPU POWER SUPPLY CONNECTIONS

- Provide the required power source for your system, either 95V to 260 V ac for the wide range ac power supply, 20 to 32 V dc, or 100 to 150 V dc for the dc power supply.

- AC power supply COnnections: connect a 3-wire AC power cord to the 3 lower terminals of the terminal board on the right. The power cord plug should have the proper pin configuration for either 115 V ac or 230 V ac.

CAUTION

If the same ac power source is used to provide ac power to other racks in a Series Six Plus PLC system, ensure that all ac input connections are identical at each rack. Do not cross line 1 (L1) and line 2 (L2). A resulting difference in potential can cause damage to equipment.

DC power supply connections: connect 3 wires from the DC power source to the proper terminals on the power supply. These terminals are labeled POS, NEG, and GND. Ensure that these wires are of the correct polarity before applying power.

Connect the alarm relay contacts to external alarm devices as required by system configuration. (Optional)

Artisan Technology Group - Quality Instrumentation ... Guaranteed | (888) 88-SOURCE | www.artisantg.com

CAUTION

The user devices connected to each set of alarm terminals on the power supply module should present a resistive load drawing no more than one amp of current at 115 V ac or 28 V dc. Failure to observe this caution may result in damage to the circuit board.

- **Connect the + and – Auxiliary Battery contacts to an external battery having a voltage from 6 to 28 V dc. This is an option that will provide a back-up to the memory back-up battery mounted on each memory module.**

CAUTION

If a memory auxiliary battery is used, the circuit connecting it to the power supply module should be isolated from the rest of the system. If this caution is not observed, the battery could be short-circuited.

After these connections have been completed the protective cover plate should be carefully reinstal led.

WARNING

Ensure that the protective cover is installed over the terminal boards. During normal operation either 115 V ac or 230 V ac is present on the ac Power supply, or 20 to 32 V dc or 100 to 150 V dc on the dc power supply. The cover protects against accidental shorting of terminals which could cause damage to the machine or injury to the operator or maintenance personnel.

SYSTEM GROUNDING PROCEDURES

All components of a programmable control system and the devices it is controlling should be properly grounded. This is particularly important for two reasons as stated below.

1. **SAFETY CONSIDERATIONS – A low resistance path from all parts of a system to earth minimizes exposure to shock in the event of short circuits or equipment malfunction.**

2. **PROPER EQUIPMENT OPERATION – Some components of the Series Six Plus PLC system require a common ground connection between racks to guarantee correct operation.**

Recommended Grounding Practices

The following grounding practices are recommended to ensure proper operator safety and correct equipment operation when installing and using a PLC system.

Artisan Technology Group - Quality Instrumentation ... Guaranteed | (888) 88-SOURCE | www.artisantg.com

Ground Conductors

1. Ground conductors should be connected in a tree fashion with branches routed to a central earth ground point. This ensures that no ground conductor carries current from any other branch. This method is shown in figure 3.12.

a41055

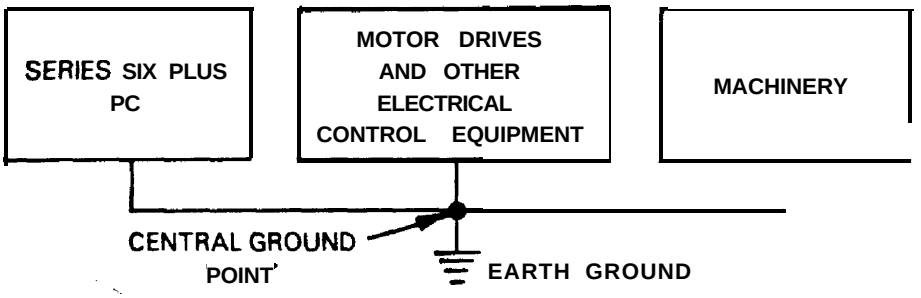

Figure 3.12 PLC SYSTEM GROUNDING

2. Ground conductors should be as short and as large in size as possible. Braided straps or welding cables (AWG No. 8 or larger) can be used to minimize resistance. Conductors must always be large enough to carry the maximum short circuit current of the path being considered.

Series Six Plus PLC Equipment Grounding

Rack Grounding – There are 2 important requirements for grounding Series Six Plus CPU, I/O and associated peripheral racks.

1. Safetv Ground. This connection should be made from the GND terminal or the rack powe; supply directly to system earth ground. The purpose of this connection is to provide a guaranteed current path to ground in case a malfunction occurs within the rack or the rack is incorrectly wired. Figure 3.1 3 illustrates recommended wiring for the rack safety ground.

a41 056

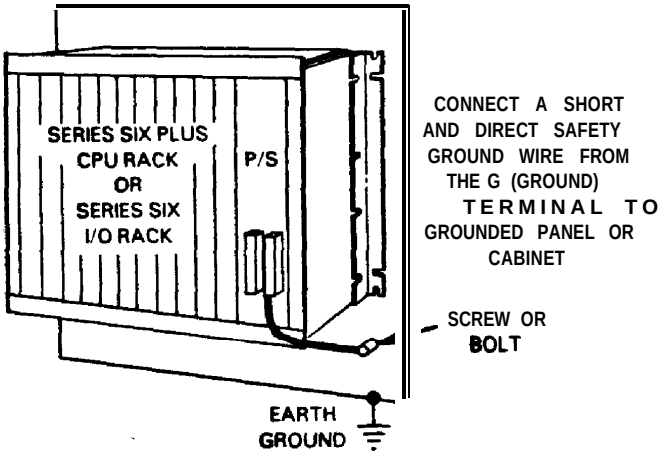

Figure 3.13 RACK SAFETY GROUND WIRING

Artisan Technology Group - Quality Instrumentation ... Guaranteed | (888) 88-SOURCE | www.artisantg.com

2. Signal Ground - All racks that are grouped together as a CPU I/O station or a Local I/O station MUST have a common ground connection. This is especially important for racks in the same I/O station which are not mounted in the same control cabinet, If this situation exists, the control cabinets MUST be tied together using the shortest possible connect ions.

NOTE

If racks in a CPU or Local I/O station are distributed among several control cabinets that cannot be directly tied together, it is recommended that I/O Transmitter modules be used to communicate between these cabinets.

The GND terminal of the rack power supply should not be used as the Signal Ground connection between racks. The best way to provide Signal Ground connections is to ensure that the Series Six Plus PLC rack metal frames are directly connected to the control panels or racks in which the racks are mounted. This can be accomplished by connecting a ground strap from one of the ground lugs on the rack plate on either side of the rack to the control panel or cabinet. These Signal Ground methods are illustrated in figures 3.14 and 3.15.

a4 1054

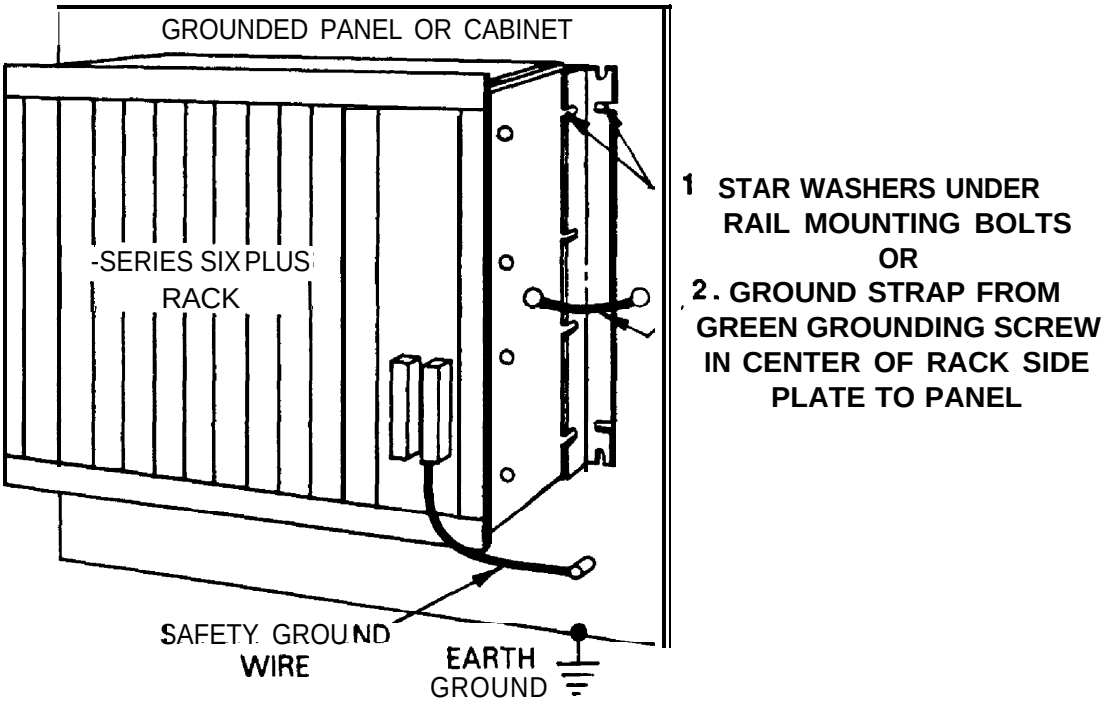

Figure 3.14 SERIES SIX PLUS PLC RACK SIGNAL GROUND CONNECTIONS

Artisan Technology Group - Quality Instrumentation ... Guaranteed | (888) 88-SOURCE | www.artisantg.com

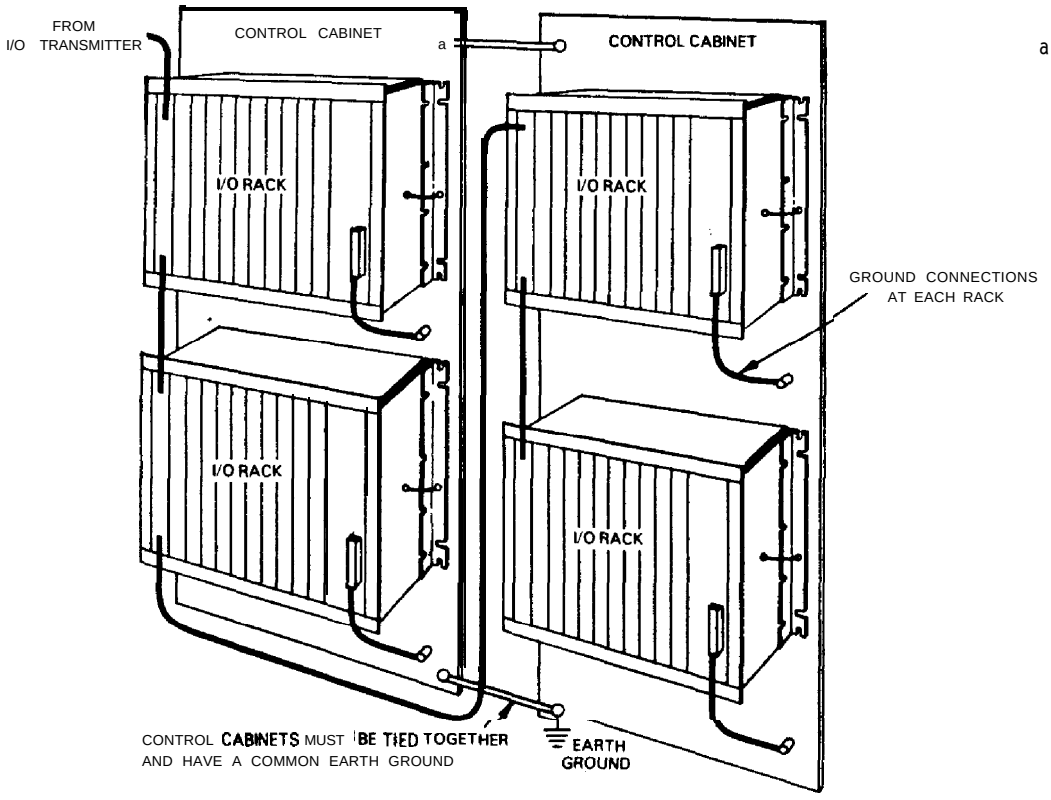

Figure 3.15 I/Q STATION GROUNDING

3. Programming Device Grounding - For proper operation, the programming device, (Workmaster computer, CMSTAR I computer, or a Program Development Terminal) must have a ground connection in common with the CPU or VO rack to which the PDT or Workmaster computer interface cable is connected. Normally, this common ground connection is provided by ensuring that the programmer's power cord is connected to the same power source (with the same ground reference point) as the CPU or I/O rack as shown in figure 3.16.

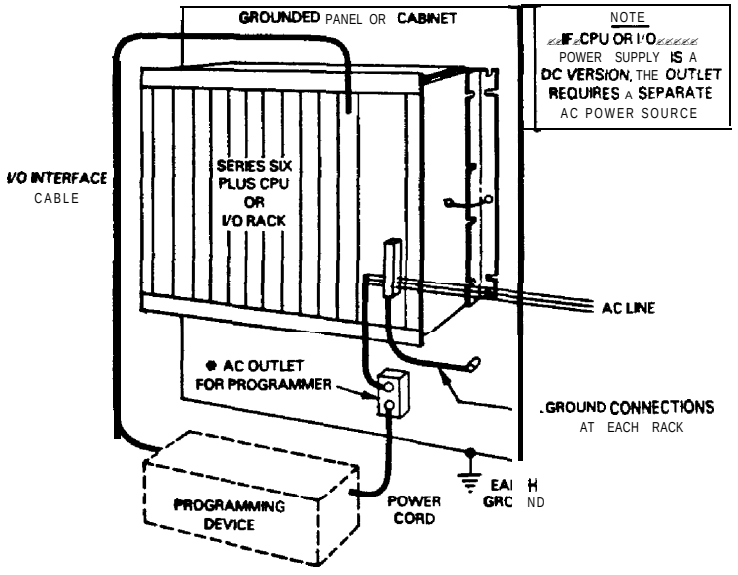

Figure 3.16 PROGRAMMING DEVtCE GROUND CONNECTION

Artisan Technology Group - Quality Instrumentation ... Guaranteed | (888) 88-SOURCE | www.artisantg.com

I/O SYSTEM CONFIGURATION

I/O rack(s) should be rack, panel or wall mounted in the same manner as the CPU rack. When mounting multiple racks at the same location, enough space should be allowed between racks, both horizontally and vertically, to allow sufficient air flow between racks (minimum of 6 inches vertically), with the exception that the 13" rack can be mounted side-by-side.

I/O Interface modules should be available for installation in racks. The types of I/O interface modules are determined by the number of I/O points required and the location of the racks in a system. Refer to Chapter 2 for a discussion of the 3 types of stations in an I/O system (CPU, Local and Remote). The type of I/O station will determine whether your I/O racks will contain I/O Receivers, Advanced I/O Receivers, I/O Transmitters, Remote I/O Drivers, Remote I/O Receivers or combinations of these modules. Figure 3.17 is an example of a typical I/O rack.

To prevent accidental mating of an I/O module with a faceplate not compatible with that module, all of the I/O printed circuit boards are keyed to match the corresponding faceplates.

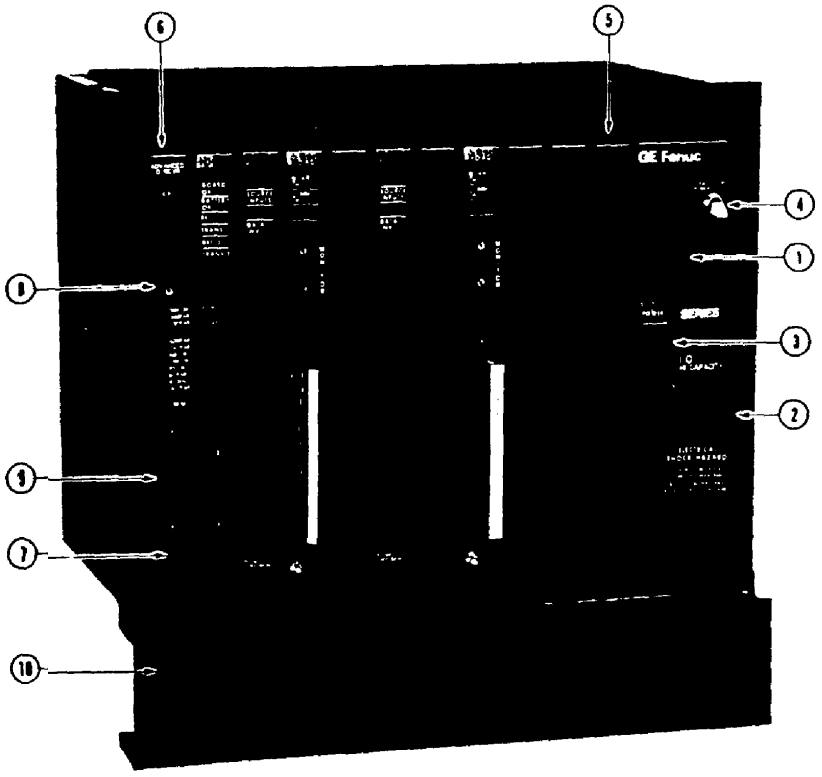

1. I/O power supply
2. Power source terminal block
3. DC Power Indicator
4. Logic Power Switch/Circuit Breaker
5. Module Slot 1
6. Module Slot 11
7. I/O System Interface Module
8. Connector to I/O Control, upstream I/O Receiver, Advanced I/O Receiver, I/O Transmitter or Remote I/O Receiver.
9. Connector to a downstream I/O Receiver.
10. Tray to contain field wiring.

Figure 3.17 TYPICAL I/O RACK

Artisan Technology Group - Quality Instrumentation ... Guaranteed | (888) 88-SOURCE | www.artisantg.com

I/O Power Supply

The I/O power supply is shipped from the factory installed in the I/O rack. 5 V dc at 6.1 A is provided for the standard I/O rack or 5 V dc at 16.5A, +I2 V dc at 1.5A and -12 V dc at 1.0A for the high capacity I/O rack (13" rack requires a high-capacity power supply). There is **one** terminal board located on the lower part of the faceplate. Remove the protective cover plate and make the required connections as shown in figure 3.18.

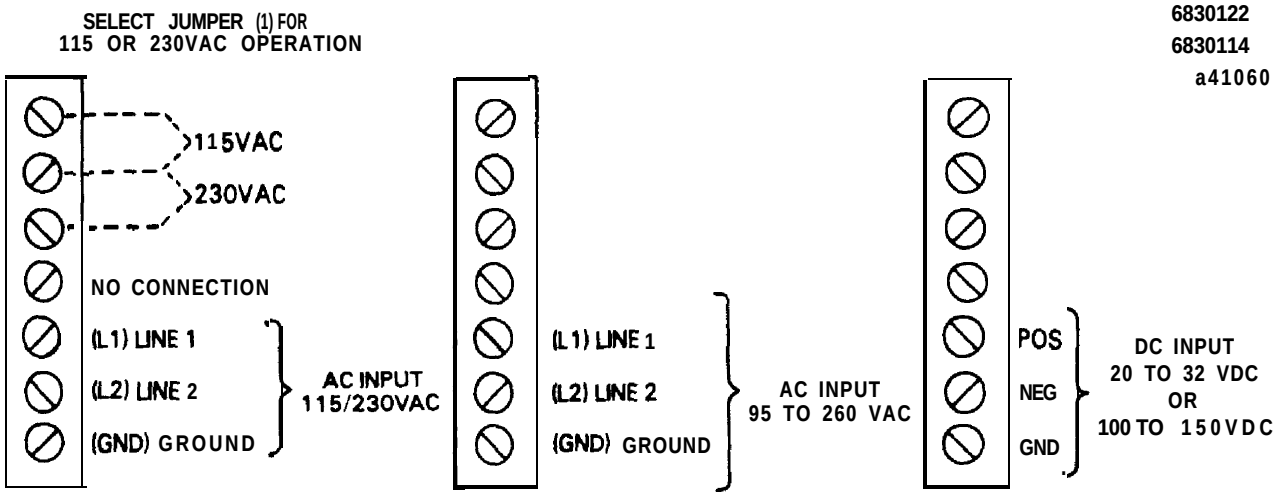

Figure 3.18 I/O POWER SUPPLY CONNECTIONS

AC Power Source Connections

- Remove the plastic cover protecting the terminal board.
- Select 115 V ac or 230 V ac input by configuring the jumper to the proper terminals as shown (for a standard power supply). The jumper will be configured for 115 V ac when shipped from the factory. The high capacity power supply does not require jumper configuration, since it is a wide range supply and will accept an ac input voltage from 95 to 260 V ac.
- Connect a 3-wire AC power cord to the 3 lower terminals.

CAUTION

When connecting multiple I/O racks to the same ac power source, ensure that all ac input connections are identical at each rack. Do not cross line 1(L1) and line 2 (L2). A resulting difference in potential can cause damage to equipment.

Artisan Technology Group - Quality Instrumentation ... Guaranteed | (888) 88-SOURCE | www.artisantg.com

DC Power Source Connections

- Remove the plastic cover protecting the terminal board.
- Connect a DC power source (20 to 32 V dc or 700 to 150 V dc as required) to the proper terminals on the terminal board (POS, NEG, or GND).

After completing the ac or dc connections as required, the protective plastic cover should be reinstalled.

WARNING

Ensure that the protective cover is installed over the terminal board. During normal operation either 115 V ac, 230 V ac, 24 V dc, or 125 V dc is present. The cover protects against accidental shorting of terminals which could cause damage to the machine or injury to the operator or maintenance personnel.

I/O System Interface Modules

The I/O system interface modules are the I/O Receiver, Advanced l/O Receiver, I/O Transmitter, Remote I/O Driver, and Remote I/O Receiver. Individual functions of these modules are described in Chapter 2, Installation instructions for each of these modules can be found in the individual data sheets for each module. Data sheets for all I/O system interface modules are included in the Series Six Data Sheet manual, GEK-25367. In addition, individual data sheets are included with each module shipped from the factory.

For reference, the data sheet numbers for each of the I/O system interface module are listed below.

I/O INTERFACE MODULE	PUBLICATION NUMBER
I/O Receiver	GEK-83512
Advanced I/O Receiver	GEK-90771
I/O Transmitter	GEK-83515
Remote I/O Driver	GEK-83537
Remote I/O Receiver	GEK-83537

A summary of installation requirements for the I/O system interface modules is included on the following pages.

Artisan Technology Group - Quality Instrumentation ... Guaranteed | (888) 88-SOURCE | www.artisantg.com

I/O Receiver or Advanced I/O Receiver

Either an I/O Receiver or an Advanced I/O Receiver module must be installed in slot 11 in a 19" rack or in slot 8 in a 13" rack, which is the leftmost slot in an I/O rack. An I/O address DIP switch is not required for this module (or for any I/O communication modules). The top connector on the I/O Receiver or Advanced I/O Receiver in a daisy chain of racks connects to an I/O Control module in the main I/O chain, to an Auxiliary I/O module in an auxiliary I/O chain, to the next upstream I/O rack, or to an I/O Transmitter in a CPU, Local or Remote I/O station. The bottom connector connects to the next rack downstream, if additional racks are in the system. The I/O Receiver and Advanced I/O Receiver modules have 2 DIP shunts and a jumper pack that must be configured to specify whether the module is to pass the I/O chain signals through to the next rack or if it is the last rack in the chain. A 16-pair parallel I/O chain cable of the required length (see table 3.4) connects the I/O Receiver or Advanced I/O Receiver to other modules on the chain.

I/O Transmitter

An I/O Transmitter module can be installed in any slot in an I/O rack or in an I/O slot in a Series Six Plus CPU rack or in a Series Six model 60 CPU rack. Connect a parallel I/O chain cable from the connector on an I/O Transmitter to the first I/O Receiver or Advanced I/O Receiver in the next downstream I/O station.

Jumper JP1 must be configured to stop or not stop the system on a system fault.

Enable system stop for a local fault	Jumper over pins 2 – 3
System does not stop for a local fault	Jumper over pins 1 – 2

A jumper (JP2) must be configured to select the I/O mode of operation, either NORMAL or EXPANDED as shown below.

NORMAL I/O Mode	Place jumper over pins 1 – 2
EXPANDED I/O Mode	Place jumper over pins 2 – 3

When in the EXPANDED I/O mode, one I/O Transmitter is required to originate each channel of Expanded I/O. The exception to this, is if only Expanded I/O channels 0 and 8 are to be used. In this case an I/O Transmitter is not required. If more than two channels of Expanded I/O are to be used, an I/O Transmitter module must be used for each channel. Any I/O Transmitters downstream from the originating one must be configured for the Normal mode.

The first 3 positions (1,2,3) of the DIP switch on the backplane adjacent to each I/O Transmitter must be configured to select the Expanded I/O channel that it is driving. The switch settings are shown below in table 3.3.

Artisan Technology Group - Quality Instrumentation ... Guaranteed | (888) 88-SOURCE | www.artisantg.com

Table 3.3 EXPANDED I/O CHANNEL SELECTION

CHANNEL NUMBER		DIP SWITCH - POSITION		
MAIN CHAIN	AUXILIARY CHAIN	3	2	1
0	8			
1	9			•
2	A		•	
3	B		•	•
4	C	•		
5	D	•		•
6	E	•	•	
7	F	•	•	•

Remote I/O Driver

A Remote I/O Driver can be installed in any I/O slot (except the left slot) in an I/O rack located in a CPU I/O station, a Local I/O station, a Series Six Plus CPU I/O slot or a model 60 CPU I/O slot. Before installing this module, the seven segment DIP switch on the backplane adjacent to the selected I/O slot for the module must be configured to select the group of I/O references for the Remote I/O station.

NOTE

Both the Remote I/O Driver and the Remote I/O Receiver must be placed in high capacity I/O racks to operate with RS-232 devices. Either a standard or high capacity I/O rack can be used when the link connections are with twisted-pair cable.

Switches 5,6, and 7 are used to establish the I/O references for groups of 120 Inputs and 120 outputs. If the option is selected for 248 Inputs and 248 Outputs, then switches 6 and 7 will establish the I/O references. The remaining switches, either 1, 2, 3 and 4 or 1, 2 and 3 respectively, are used to select a unique address for the Remote I/O Driver. The unique address will assign 8 consecutive I/O points to the Driver which will be used to provide status data to the CPU for the Remote I/O station.

A group of jumper plugs must also be configured for proper system operation. These items configured by the jumpers include the following:

- **Quantity of I/O (120/120 or 2481248)**
- **Remote I/O Parity Error Effect on the CPU (STOP or Continue to RUN)**
- **Communications Failure Effect on the CPU (STOP or Continue to RUN)**
- **Even or Odd Parity**
- **Specify Parity Check (Yes or No)**
- **Baud Rate (Selectable from 110 baud to 57.6K baud)**
- **Carrier Detect (No or Yes)**
- **Clear To Send (No or Yes)**
- **Output Mode (Twisted Pair or RS-232)**
- **Input Mode (Twisted Pair or RS-232)**
- **Sensitivity (Medium or Minimum)**

For detailed instructions on jumper configuration for a Remote I/O Driver module, refer to the Remote I/O module data sheet, GEK-83537.

Artisan Technology Group - Quality Instrumentation ... Guaranteed | (888) 88-SOURCE | www.artisantg.com

Remote I/O Receiver

A Remote I/O Receiver must be installed in the left slot (slot 11 in a 19" rack or slot 8 in a 13" rack) of the first I/O rack in a Remote I/O station. The Remote Receiver does not require an I/O address. Before installing a Remote Receiver module, several jumper plugs on the printed circuit board must be configured to be compatible with the Remote I/O Driver to which it is connected. The jumper locations are arranged on the board in groups of three pins and are identified by the center pin.

If direct connection to the Remote I/O Driver is to be through a serial two twisted-pair cable at a distance up to 10,000 feet (3Km), the end of this cable at the Remote I/O station should be connected to the top connector. If connection is to be through an RS-232 modem link, a cable, not to exceed 50 feet (15 meters) in length should be connected from the top connector to the modem in the Remote I/O station.

If there is to be more than one I/O rack in the Remote I/O station, the next downstream rack in the daisy chain will connect to the bottom connector using a 16 pair parallel I/O chain cable. This cable will in turn connect to an I/O Receiver in the next rack. If the rack containing the Remote Receiver is the only rack in a Remote Station, terminate the I/O chain signals by configuration of jumpers on the Remote Receiver printed circuit board.

For detailed information on jumper configuration, refer to the Remote I/O module data sheet, GEK-83537.

Parallel I/O Chain Cables

Cables may be ordered in standard lengths for interconnection between racks on the parallel I/O chain. The maximum cable lengths in a system configuration are determined by the type of I/O station used. For cable limitations refer to Chapter 2 in this manual. Table 3.4 lists the standard length I/O cables available.

Table 3.4 PARALLEL i/O CHAIN CABLE CATALOG NUMBERS

Length		Catalog
Feet	Meters	Number
2	0.6	IC600WD002A
5	1.5	IC600WD005A
10	3.0	IC6OOWD010A
25	7.5	IC600WD025A
50	15.0	IC600WD050A
100	30.0	IC600WD100A
200	60.0	IC600WD200A
300	90.0	IC600WD300A
400	120.0	IC600WD400A
500	150.0	IC600WD500A

Artisan Technology Group - Quality Instrumentation ... Guaranteed | (888) 88-SOURCE | www.artisantg.com

Parallel I/O Cable Conf iguration

Figure 3.19 is an illustration of the Parallel I/O Chain cable used to connect a CPU to I/O rack or to connect racks in a daisy chain in a CPU I/O station, a Local I/O station or I/O racks within a Remote I/O station.

70126

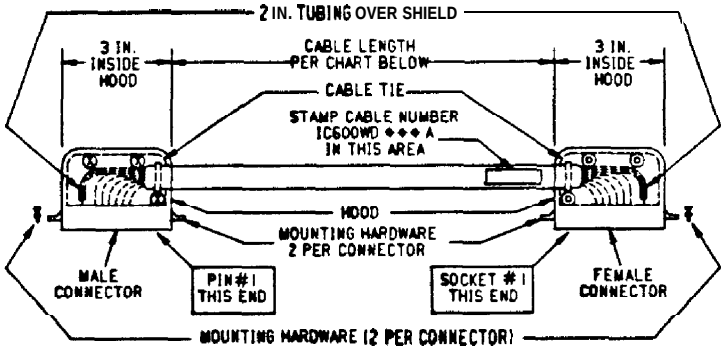

WIRE TABLE FOR ALL CABLE LENGTHS

PLUG #1	WIRE TABLE	PLUG #2	PLUG #1	WIRE TABLE	PLUG #2
PIN #1	N O	CONNECTION SOCKET	PIN #20	WY-RED	SOCKET #20
PIN #2	BLUE-WIT	SOCKET #2	PIN # 21	RED-GRY	SOCKET #21
PIN #3	WHT-BLU	SOCKET #3	PIN # 22	BLU-BLK	SOCKET #22
PIN #4	ORN-WHT	SOCKET #4	PIN #23	BLK-BLU	SOCKET #23
PIN #5	WHT-ORN	SOCKET #5	PIN #24	DRN -BLK	SOCKET #24
PIN #6	GRN-WHT	SOCKETt6	PIN #25	BLK-ORN	SOCKET #25
PIN #7	WHT-GRN	SOCKET #7	PIN #26	GRN-BLK	SOCKET #26
PIN #8	BRN-WHT	SOCKET #8	PIN #27	BLK-GRN	SOCKET #27
PIN #9	WHT-BRN	SOCKET #9	PIN #28	BRN-BLK	SOCKET #28
PIN #10	GRY-WHT	SOCKET #10	PIN #29	BLK-BRN	SOCKET #29
PIN #11	WHT-GRY	SOCKET #11	PIN #30	GRY-BLK	SOCKET #30
PIN #12	BLU-RED	SOCKET #12	PIN # 31	BLK-GRY	SOCKET #31
PIN #13	RED-BLU	SOCKET #13	PIN #32	BLU-YEL	SOCKET #32
PIN #14	ORN -RED	SOCKET #14	PIN #33	YEL-BLU	SOCKET #33
PIN #15	RED-ORN	SOCKET #15	PIN #34	NOT USED	SOCKET #34
PIN #16	GRN-RED	SOCKET #16	PIN #35	NOT USED	SOCKET #35
PIN #17	RED-GRN	SOCKET #17	PIN #36	NOT USED	SOCKET #36
PIN #18	BRN-RED	SOCKET #18	PIN #37	SHIELD	SOCKET #37
PIN #19	RED-BRN	SOCKET #19			

LENGTH FEET	LENGTH METERS	CATALOG NUMBER	LENGTH FEET	LENGTH METERS	CATALOG NUMBER
2	0.6	IC600WD002A	100	30.0	IC600WD100A
5	1.5	IC600WD005A	200	60.0	IC600WD200A
10	3.0	IC600WD010A	300	90.0	IC600WD300A
25	7.5	IC600WD025A	400	120.0	IC600WD400A
50	15.0	IC600WD050A	500	150.0	IC600WD500A

NOTE

Minimum conduit size for running this cable (with the hoods in place) should be no less than 2 inches.

Figure 3.19 PARALLEL I/O CHAIN CABLE

Artisan Technology Group - Quality Instrumentation ... Guaranteed | (888) 88-SOURCE | www.artisantg.com

Serial Link Cable To Remote I/O System

The following data is provided as an aid to the user for assembling and wiring a twisted-pair cable for connecting a Local I/O system to a Remote I/O system over a serial link.

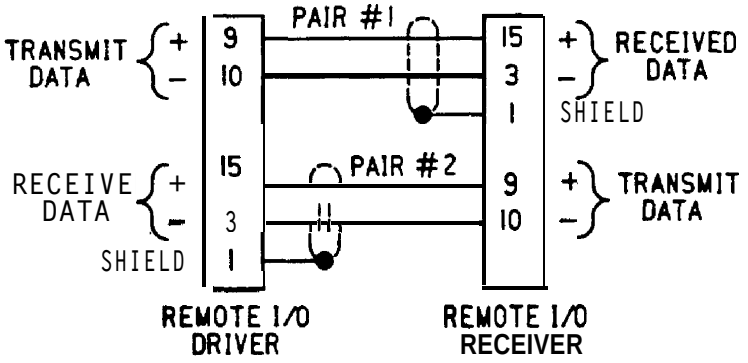

CABLE SPECIFICATIONS

- **Length, Maximum – 10,000 Feet (3 Kilometers)**
- **Two Individual Shielded,Twisted pairs**
- **22 AWG, Minimum**
- **15 pf/foot, Maximum**
- **Cable Type – National Electric Cable Co. 22P1SLCBT or equivalent**
- **Connector (Driver and Receiver End) – D-Subminiature Type, Cannon DBC25P with 207908-7 Hood or equivalent connector and hood**

Figure 3.20 REMOTE I/O TWISTED PAIR CABLE

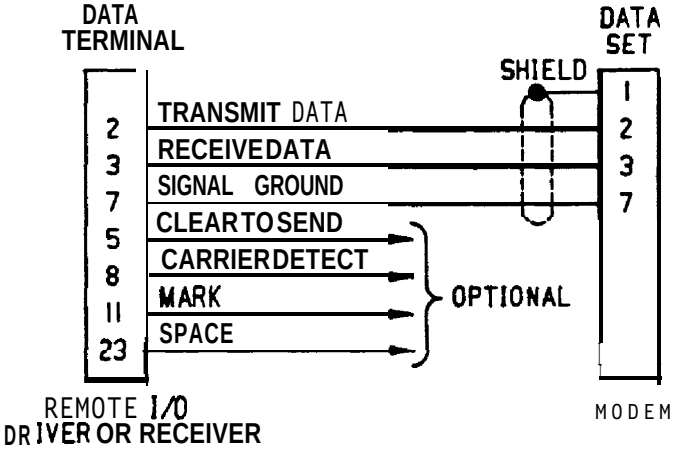

CABLE SPECIFICATIONS

- **Length, Maximum – 50 feet (15 Meters)**
- **Overall Shield**
- **24 AWG, Minimum**
- **Connector, Driver or Receiver End – D-Subminiature Type, Cannon DBC25P with 207908-7 Hood or equivalent**
- **Connector, Modem – User selected**

Figure 3.21 REMOTE I/O CABLE FOR RS-232 MODEMS

Artisan Technology Group - Quality Instrumentation ... Guaranteed | (888) 88-SOURCE | www.artisantg.com

I/O POINT SELECTION

After I/O racks have been installed, cables run, and AC or DC power cables connected, the racks are ready for installation of I/O modules. The I/O module starting I/O point reference numbers should now be programmed by setting the DIP switches on the rack backplane adjacent to the connectors. Refer to figure 3.22, as a guide to configuration of the DIP switches for 8 circuit modules. The I/O point number selected is the first of eight consecutive I/O points (one I/O address) starting with that number. For modules requiring different switch settings, such as High Density or Analog modules, refer to the installation instructions on the applicable data sheet for each module for proper DIP switch configuration.

After configuring the DIP switches, install the I/O modules in their respective slots as determined by your program. The actual I/O reference used for each I/O point in your program depends on whether the I/O system is in the Normal or Expanded I/O mode. If the Expanded I/O mode is selected, the applicable channel number is added before the reference number as described previously.

NOTE

There are limitations on the combination of types of I/O modules which may be installed in an I/O rack. This is determined by the load placed on the power supply by the various modules.

70.97

I/O POINT	DIP SWITCH POSITION 7	6	5	4	3	2	1
1-8							X
9-16						X	
17-24						X	X
25-32					X		
33-40					X		X
41-48					X	X	
49-56					X	X	X
57-64				X			
65-72				X			X
73-80				X		X	
81-88				X	X		
89-96				X	X	X	
97-104				X	X		
105-112				X	X		X
113-120				X	X	X	
121-128				X	X	X	X
129-136			X				
137-144			X				X
145-152			X			X	
153-160			X			X	X
161-168			X		X		
169-176			X		X		X
177-184			X		X	X	
185-192			X		X	X	X
193-200			X	X			
201-208			X	X			X
209-216			X	X		X	
217-224			X	X		X	X
225-232			X	X	X		
233-240			X	X	X		X
241-248			X	X	X	X	
249-256			X	X	X	X	X
257-264		X					
265-272		X					X
273-280		X				X	
281-288		X				X	X
289-296		X			X		
297-304		X			X		X
305-312		X			X	X	
313-320		X			X	X	X
321-328		X		X			
329-336		X		X			X

I/O POINT	DIP SWITCH POSITION 7	6	5	4	3	2	1
337-344		X		X		X	
345-352		X		X		X	X
353-360		X		X	X		
361-368		X		X	X		X
369-376		X		X	X	X	
377-384		X		X	X	X	X
385-392		X	X				
393-400		X	X				X
401-408		X	X			X	
409-416		X	X			X	X
417-424		X	X		X		
425-432		X	X		X		X
433-440		X	X		X	X	
441-448		X	X		X	X	X
449-456		X	X	X			
457-464		X	X	X			X
465-472		X	X	X		X	
473-480		X	X	X		X	X
481-488		X	X	X	X		
489-496		X	X	X	X		X
497-504		X	X	X	X	X	
505-512		X	X	X	X	X	X
513-520	X						
521-528	X						X
529-536	X					X	
537-544	X					X	X
545-552	X				X		
553-560	X				X		X
561-568	X				X	X	
569-576	X				X	X	X
577-584	X			X			
585-592	X			X			X
593-600	X			X		X	
601-608	X			X		X	X
609-616	X			X	X		
617-624	X			X	X		X
625-632	X			X	X	X	
633-640	X			X	X	X	X
641-648	X		X				
649-656	X		X				X
657-664	X		X			X	
665-672	X		X			X	X

I/O POINT	DIP SWITCH POSITION 7	6	5	4	3	2	1
673-680	X		X		X		
681-688	X		X		X		X
689-696	X		X		X	X	
697-704	X		X		X	X	X
705-712	X		X	X			
713-720	X		X	X			X
721-728	X		X	X		X	
729-736	X		X	X		X	X
737-744	X		X	X	X		
745-752	X		X	X	X		X
753-760	X		X	X	X	X	
761-768	X		X	X	X	X	X
769-776	X	X					
777-784	X	X					X
785-792	X	X				X	
793-800	X	X				X	X
801-808	X	X			X		
809-816	X	X			X		X
817-824	X	X			X	X	
825-832	X	X			X	X	X
833-840	X	X		X			
841-848	X	X		X			X
849-856	X	X		X		X	
857-864	X	X		X		X	X
865-872	X	X		X	X		
873-880	X	X		X	X		X
881-888	X	X		X	X	X	
889-896	X	X		X	X	X	X
897-904	X	X	X				
905-912	X	X	X				X
913-920	X	X	X			X	
921-928	X	X	X			X	X
929-936	X	X	X		X		
937-944	X	X	X		X		X
945-952	X	X	X		X	X	
953-960	X	X	X		X	X	X
961-968	X	X	X	X			
969-976	X	X	X	X			X
977-984	X	X	X	X		X	
985-992	X	X	X	X		X	X
993-1000	X	X	X	X	X		

X = Switch in OPEN Position (Depressed to the Left)

Figure 3.22 DIP SWITCH SETTINGS FOR I/O POINT SELECTION FOR 8 CIRCUIT MODULES

Artisan Technology Group - Quality Instrumentation ... Guaranteed | (888) 88-SOURCE | www.artisantg.com

POWER SUPPLY LOAD CAPACITY

The load capacity of the power supply in a Series Six Plus CPU rack is the sum of the internal loads placed on it by each of the CPU modules as well as the I/O modules and is expressed as units of load, with 1 unit of load being equal to 300 milliwatts of power.

Each unit of load of 300 milliwatts can also be expressed in terms of current as follows:

+5 Vdc = 60 mA of current
+12 V dc = 25 mA of current
-12 V dc = 25 mA of current

Load Capacity for a Series Six Plus CPU Rack

The power supply in a Series Six Plus CPU rack is a high capacity supply with 3 outputs having capacities as follows:

Table 3.5 CPU RACK POWER SUPPLY CAPACITIES

VOLTAGE & CURRENT	UNITS OF LOAD
+5 V dc at 16.5 Amps	275 units of load
+12 V dc at 13 Amps	60 units of load
-12 V dc at 1.0 Amps	40 units of load

NOTE

In addition to the units of load listed for each voltage type, the total load on all outputs of the supply must not exceed 300 units of load (90 watts of total power.

The number of I/O modules that can be used in a rack is determined by adding up the loads of all CPU modules and subtracting that load from the total load capacity. The remaining capacity in a Series Six Plus CPU rack usually allows up to 100 units of load for I/O modules to be contained in the rack. The total load of those I/O modules must not exceed the remaining current capacity.

CAUTION

Do not exceed any of the following limits:

1. **The total current capacity (units of load) of each supply (+5, +I 2 and -12 V dc).**

2. **The sum of units of load for all supplies must not exceed 300 units.**

Artisan Technology Group - Quality Instrumentation ... Guaranteed | (888) 88-SOURCE | www.artisantg.com

The available units of load for each module to be located in the CPU rack are listed in Table 3.6.

Table 3.6 SUMMARY OF UNITS OF LOAD FOR CPU RACK MODULES

CATALOG NUMBER	MODULE DESCRIPTION	UNITS OF LOAD (1)		
		+5 v	+12 v	-12 v
IC600CB524	Arithmetic Control	30		
IC600CB525	Logic Control (Advanced)	12	-	-
IC600CB526	Logic Control (Expanded)	12	-	-
IC600CB515	Logic Control (Expanded II)	12	-	-
IC600CB503	I/O Control	17	-	-
IC600CB513	Auxiliary I/O Control	9	-	-
IC600LX605	Logic Memory	24	-	1
IC600LX612	Logic Memory	24	-	1
IC600LX616	Logic Memory	24	-	1
IC600LX624	Logic Memory	24	-	1
IC600LX648	Logic Memory	24	-	1
IC600LX680	Logic Memory	24	-	1
IC600CB516	Communications Control (CCM2)	17	4	4
IC600CB517	Communications Control (CCM3)	17	4	4
IC650AEL000	LAN Interface Controller Board	20	2	1
IC650AEM010	LAN Interface Modem Board	17	16	2

(1) For +5 V dc, 1 unit of load = 60 mA (300 mw of power)
For +12 V dc, 1 unit of load = 25 mA (300 mw of power)
For -12 V dc, 1 unit of load = 25 mA (300 mw of power)

Artisan Technology Group - Quality Instrumentation ... Guaranteed | (888) 88-SOURCE | www.artisantg.com

Load Capacity for an I/O Rack

The power supply in a standard I/O rack can supply 100 units of load while the power supply load capacity in the high capacity I/O rack is the same as the load capacity for a Series Six Plus CPU rack (275 units of load for +5 V dc, 60 units of load for +12 V dc, and 40 units of load for -12 V dc). The total load on all outputs for the high capacity supply must not exceed 300 units of load (90 watts of total power). The types of I/O racks (standard or high capacity) to be used in **a** system are determined by the combination of modules to be installed in the racks. Table 3.7 is a list of the I/O modules and their units of load.

Table 3.7 SUMMARY Of UNITS OF LOAD FOR f/O MODULES

CATALOG NUMBER	MODULE DESCRIPTION	UNITS OF LOAD (1)		
		+5 v	+12 v	-12 V
IC600BF800	I/O Receiver	9		-
IC600BF801	Remote I/O Receiver	42	10	10 (2)
IC600BF802	24 to 48 V dc Input	2		
IC600BF804	115 V ac/dc Input	2		
IC600BF805	230 V ac/dc Input	2		
IC600BF806	12 V ac/dc Input	2		
IC600BF808	Interrupt Input	3		
IC600BF810	115 V ac/dc Isolated Input	2		
IC600BF813	Type J Thermocouple Input	29		
IC600BF814	Type K+ Thermocouple Input	29		
IC600BF875	Type S Thermocouple Input	29		
IC600BF816	Type T Thermocouple Input	29		
IC600BF817	Type B Thermocouple Input	29		
IC600BF818	Type E Thermocouple Input	29		
IC600BF819	Type R Thermocouple Input	29		
IC600BF827	High Speed Counter	19		
IC600BF830	Advanced I/O Receiver	12		
IC600BF831	High Density Input	4		
IC600BF841	0 to 10 V dc Analog Input	29		
IC600BF842	+/-10 V dc Analog Input	29		
IC600BF843	4 to 20 mA Analog Input	29		
IC600BF900	I/O Transmitter	34		
IC600BF901	Remote I/O Driver	38	10	10 (2)
IC600BF902	24 V dc Sink Output	7		
IC600BF903	48 V dc Sink Output	7		
IC600BF904	115 V ac Output	9		
IC600BF905	230 V ac Output	9		
IC600BF906	12 V dc Sink Output	7		
IC600BF907	12 V dc Source Output	7		

(I). For +5 V dc, 1 unit of load equals 60 mA (300 mw of power).
For +12 and -12 V dc, 1 unit of load equals 25 mA (300 mw of power).

(2). +I2 V and -12 V current is less than 1 unit of load if RS-232 mode is not used.

Artisan Technology Group - Quality Instrumentation ... Guaranteed | (888) 88-SOURCE | www.artisantg.com

Table 3.7 SUMMARY OF UNITS OF LOAD FOR I/O MODULES (Continued)

CATALOG NUMBER	MODULE DESCRIPTION	UNITS OF LOAD (1)		
		+5 v	+12 v	-12 v
IC600BF908	24 V dc Source Output	7		
IC600BF909	48 V dc Source Output	7		
IC600BF910	115 V ac Isolated Output	8	-	-
IC600BF912	230 V ac Isolated Output	8		
IC600BF914	Reed relay output	13		
IC600BF915	Axis Positioning Module, Type 1	23	7	3
IC600BF917	Axis Positioning Module, Type 2	21	11	6
IC600BF921	5 V TTL Output	3	-	-
IC600BF923	10 to 50 V dc Sink Output	3	-	-
IC600BF924	120 V dc Output	5		-
IC600BF929	10 to 50 V dc Source output	3	I	-
IC600BF930	115 V ac Protected Output	8	-	-
IC600BF941	0 to 10 V dc Analog Output	29		
IC600BF942	+/-10 V dc Analog Output	29		
IC600BF943	4 to 20 mA Analog Output	29		
IC600BF944	ASCII/BASIC Module (12K)	20	12	-
IC600BF949	ASCII/BASIC Module (28K)	20	12	-
IC600BF946	Loop Management Module	20	12	-
IC600BF947	I/O Link Local	20	12	-
IC600BF948	I/O CCM	20	12	-
IC600BF950	I/O CCM4	20	12	-
IC660CBB900	Genius Bus Controller	20	2	-
IC660CB902	Genius Bus Controller w/Diag.	20	2	-
IC660CBB901	Genius Bus Controller	20	2	-
IC660CB903	Genius Bus Control1 wo/Diaq.	20	2	

(7) For +5 V dc, 1 unit of load equals 60 mA (300 mw of power). For +12 and -12 V dc, 1 unit of load equals 25 mA (300 mw of power).

********** IMPORTANT INFORMATION **********

After you have completed the installation procedures for all of your hardware and have installed the Logicmaster 6 software on your Workmaster industrial computer, CIMSTAR I industrial computer, or IBM PLC, PC-XT, or PC-AT Personal Computer, you should proceed to the following START-UP instructions for a new Series Six CPU.

INITIAL START-UP INSTRUCTIONS FOR A NEW SERIES SIX CPU

Any new memory board will usually power-up with a parity error. The reason this happens is that when the lithium battery is first plugged into the board, the RAM memory devices power-up in an unknown state. These parity errors must be cleared before proper CPU operation can be expected. The CPU should be cleared even though it appears to run properly when it is first powered-up. The following procedures, when followed, will clear any parity errors present in the CPU memory when starting up a CPU for the first time.

Artisan Technology Group - Quality Instrumentation ... Guaranteed | (888) 88-SOURCE | www.artisantg.com

WARNING

Unpredictable operation of the CPU may occur if the CPU is in the RUN mode with an uninitialized memory board. Always place the CPU in the STOP mode when installing a new memory board.

1. **Install lithium battery on the Logic Memory module.**

Before installing a memory module in a CPU rack, the Lithium-Manganese Dioxide battery must be connected. These modules are shipped from the factory with the battery connector disconnected from the battery. When connecting a battery, the following procedure is recommended.

- **The battery mounting location is at the bottom front of the memory module on the component side of the module.**
- **If the battery is not mounted, firmly place it in the mounting clip with the cable end facing toward the battery connectors.**
- **Connect the battery cable to one of the battery connectors.**
- **The memory module is now ready for installation into the CPU rack.**

CAUTION

Relatively small amounts of excess charge can cause very intense electrostatic fields in metal-oxide-semiconductor (MOS) devices, damaging their gate structure. Avoid handling the circuit boards under conditions favoring the buildup of static electricity. Failure to observe this caution could result in the destruction of the CMOS RAM devices in this module.

- **Be sure that the board covers provided with the Logic Memory module are in place before installing the module.**

CAUTION

Do not allow the bottom of a module to come into contact with a conductive (metal) surface when the board cover is removed. Failure to observe this caution could result in the discharge of the non-rechargeable lithium battery and the loss of memory contents.

- **When installing a Logic Memory module or any module, position the component side of the board to your right (towards the CPU power supply) as shown in figure 3.8.**

NOTE

Proper orientation of printed circuit boards is with component side towards the power supply.

Artisan Technology Group - Quality Instrumentation ... Guaranteed | (888) 88-SOURCE | www.artisantg.com

Install the faceplate by placing the faceplate in the proper position and while pushing in, turn the quarter-turn thumbscrew clockwise until it feels secure.

2. Remove any I/O modules from the backplane of the CPU. Disconnect any expansion racks from the CPU rack and plug the I/O Terminator Plug supplied with the CPU rack into either port of the I/O Control module,

3. Turn the RUN/STOP keyswitch to the STOP position and the MEMORY PROTECT keyswitch to the WRITE position.

4. Apply power to the CPU rack and turn on the power switch.

5. The CHECK light on the Arithmetic Control module should be on at this time before proceeding to the next step. If it is not on, power-down, reseat the CPU boards and power-up again.

NOTE

If at any time when the CPU is switched to the RUN mode, it drops out of RUN on a memory parity error, most likely the communication ports are locked out. To reset the ports, turn the RUN/STOP keyswitch to STOP, power-down the CPU and power-up again.

If you are using a Workmaster computer with the parallel version of Logicmaster 6 software, proceed with the following steps:

1. Boot up the Workmaster computer. Display the SUPERVISOR MENU.

2. Turn the keyswitch to OFFLINE, and connect the cable from the Workmaster computer to the CPU.

3. Select the US/V function with the F6 key and clear the Logicmaster memory while in that function by selecting the F5 (CLEAR) key.

4. Return to the SUPERVISOR MENU and go to the Scratch Pad by selecting the F4 key. Set the Scratch Pad values for Logic Memory and Register memory size to match the memory actually installed in the CPU.

5. Again go to the L/S/V function and store the blank program (nothing in memory) to the CPU by selecting the F2 key and following the instructions on the screen.

6. Return to the Supervisor menu and select the UTILITY FUNCTION Menu by selecting the F8 key. From this menu, select the CLEAR PARITY function with the F7 key and follow the screen instructions.

7. Turn the CPU RUN/STOP keyswitch to RUN. The CPU should be cleared of any memory parity errors at this time.

If you are using a programming device other than the Workmaster industrial computer, start-up procedures are similar. Refer to the Logicmaster 6 Programming and Software User's manual for detailed instructions for start-up with those devices.

Artisan Technology Group - Quality Instrumentation ... Guaranteed | (888) 88-SOURCE | www.artisantg.com

RUNNING EXPANDED I/O ON THE SERIES SIX PLUS PLC

As Internal Coils Only

Simply type "1" or "0" then CNTL-channel number, followed by the I/O point number. The I/O is mapped into its corresponding register tables. No [SERIES SIX CONFIGURATION DATA] command is needed. Channels do not have to be enabled in the CPU Config Menu.

To Be Solved To Real World I/O Points

Program the [SERIES SIX CONFIGURATION DATA] command in rung 1 and then set the number of channels to be scanned in the CPU CONFIG MENU, then transfer to the CPU.

How It Works

When running expanded I/O channels, the CPU generates a code for a particular channel number then does a full I/O scan as it normally does. The channels are scanned in order from the lowest to the highest enabled channel. Each one takes 6-7 ms. Auxiliary channels are automatically scanned with their corresponding main channel. For example, enabling channels 0-3 also enables channel 8-B.

An I/O Transmitter (IC600YB900C or later) capable of decoding I/O channels must be used to separate the real I/O channels. One and only one transmitter should be set to decode each channel. These transmitters have a jumper to allow them to run in expanded or normal mode. In expanded mode, they turn on only when their channel is called for. The channel number is set by the first three dip switches on the rack backplane. In this way, the I/O data for each channel stays separated. No I/O cards, Remote I/O Drivers, or phase A Bus Controller may be installed in any I/O slot that is not downstream of a decoding transmitter. Any such device would receive data from all enabled channels. Outputs would respond to all enabled channels, and inputs would report back to all channels that scanned that address.

Phase B Genius Bus Controllers also have the capability of decoding I/O channels and could be placed in a non-decoded slot. Once downstream of a transmitter with a channel selected, all normal rules apply for cable length, number of racks, chain termination, etc. Any other Y8900C transmitters downstream should be set to normal I/O mode. Also, no other transmitters could decode any other channel. For example, a transmitter in channel 0 could not be set for channel 1. The data for channel 1 is not present in channel 0.

Examples of correct and incorrect configurations for expanded I/O are shown in the following examples.

Artisan Technology Group - Quality Instrumentation ... Guaranteed | (888) 88-SOURCE | www.artisantg.com

a42208

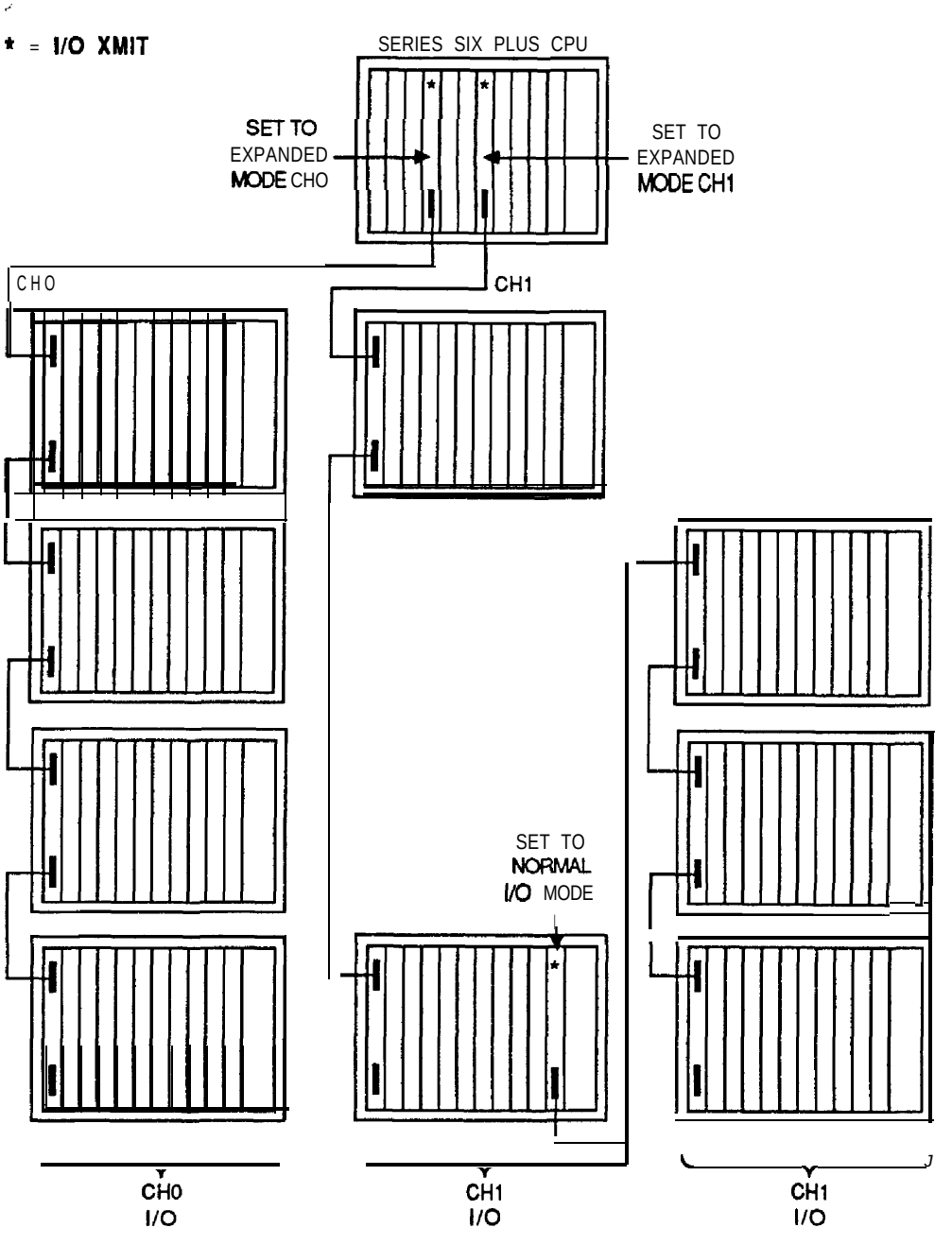

Figure 3.23 EXAMPLE 1 - CORRECT CONFIGURATION

Artisan Technology Group - Quality Instrumentation ... Guaranteed | (888) 88-SOURCE | www.artisantg.com

GEK-96602

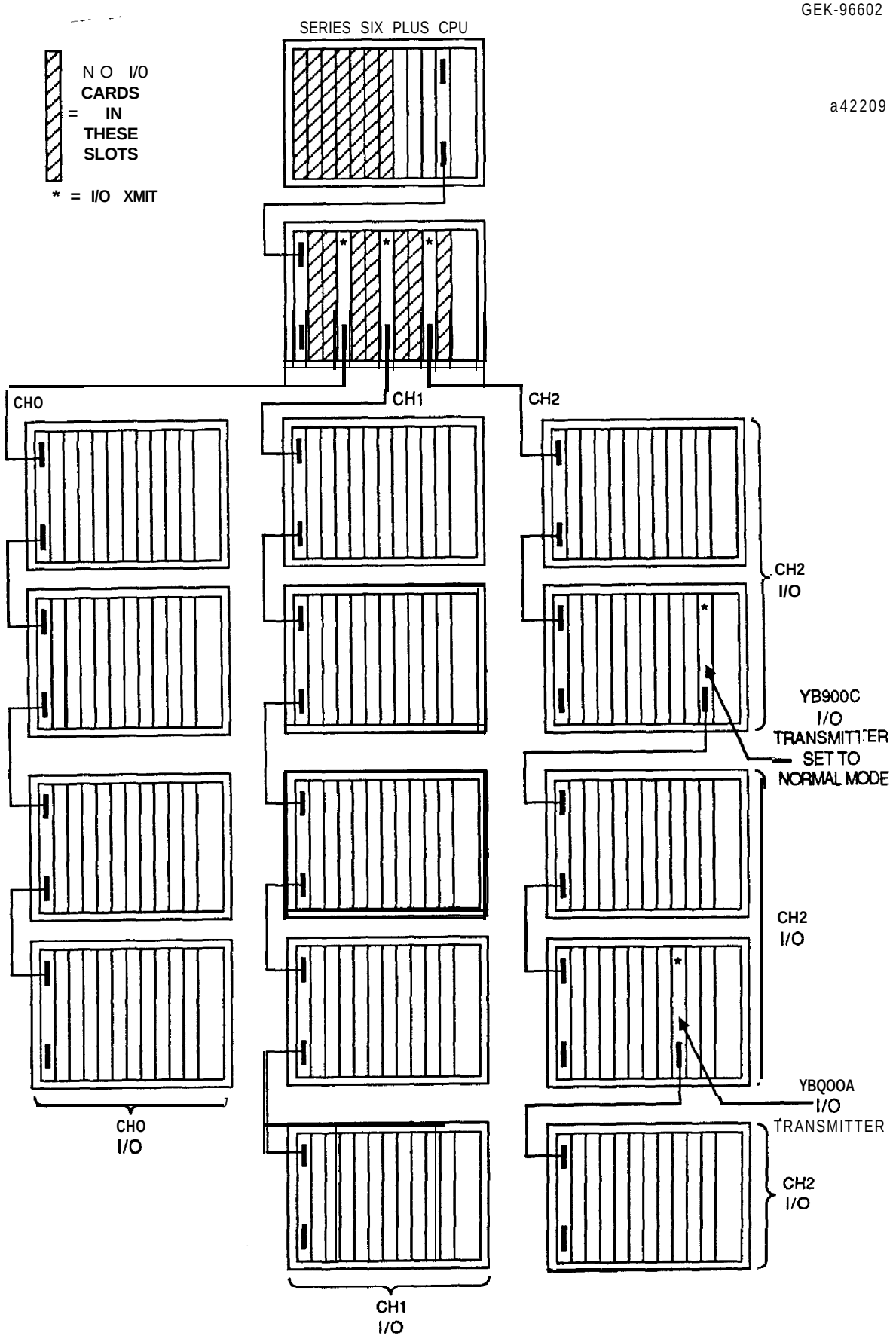

Figure 3.24 EXAMPLE 2 - CORRECT CONFIGURATION

Artisan Technology Group - Quality Instrumentation ... Guaranteed | (888) 88-SOURCE | www.artisantg.com

a42210

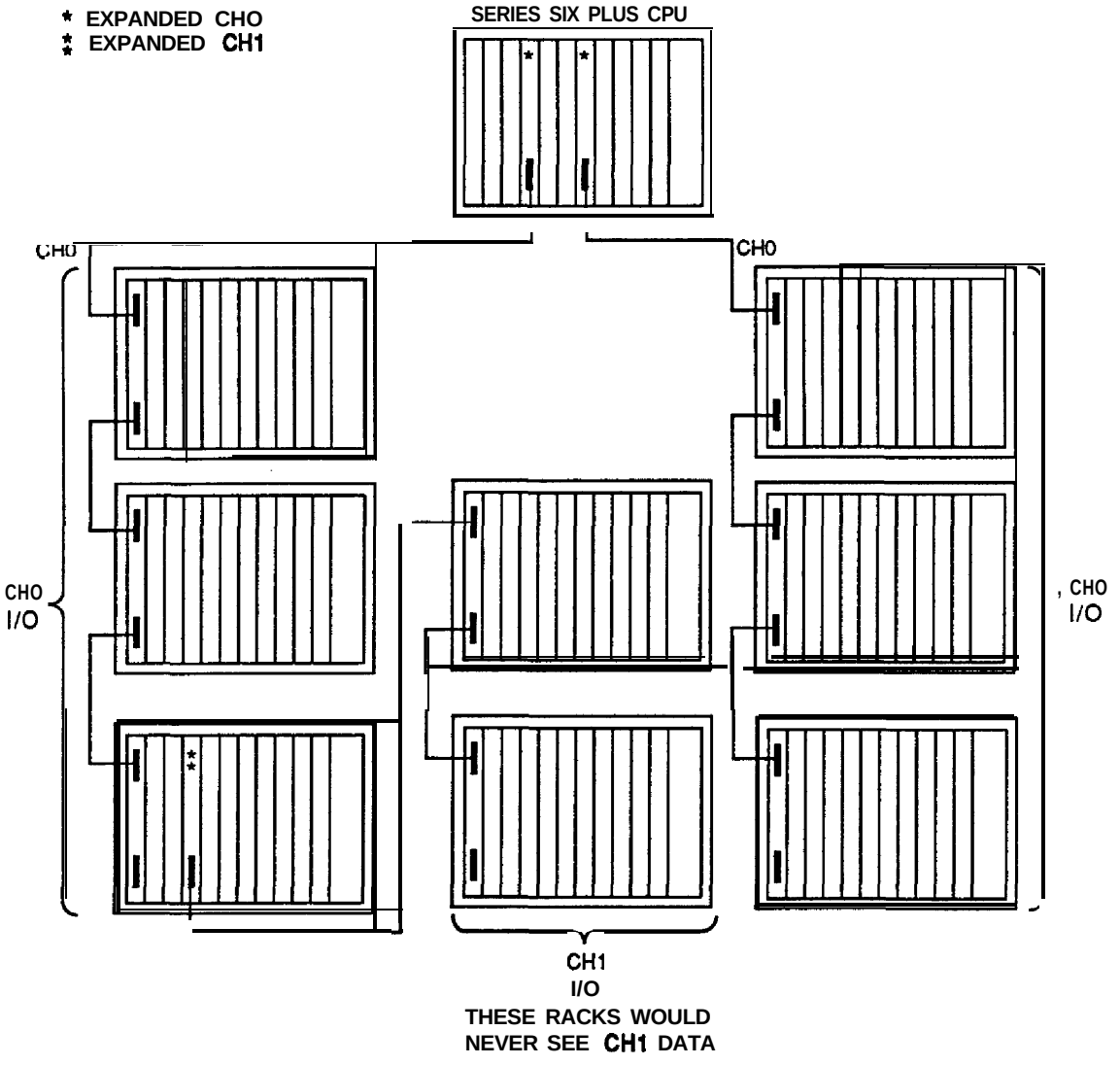

Figure 3.25 EXAMPLE 3 - INCORRECT CONFIGURATION

Artisan Technology Group - Quality Instrumentation ... Guaranteed | (888) 88-SOURCE | www.artisantg.com

a4221 1

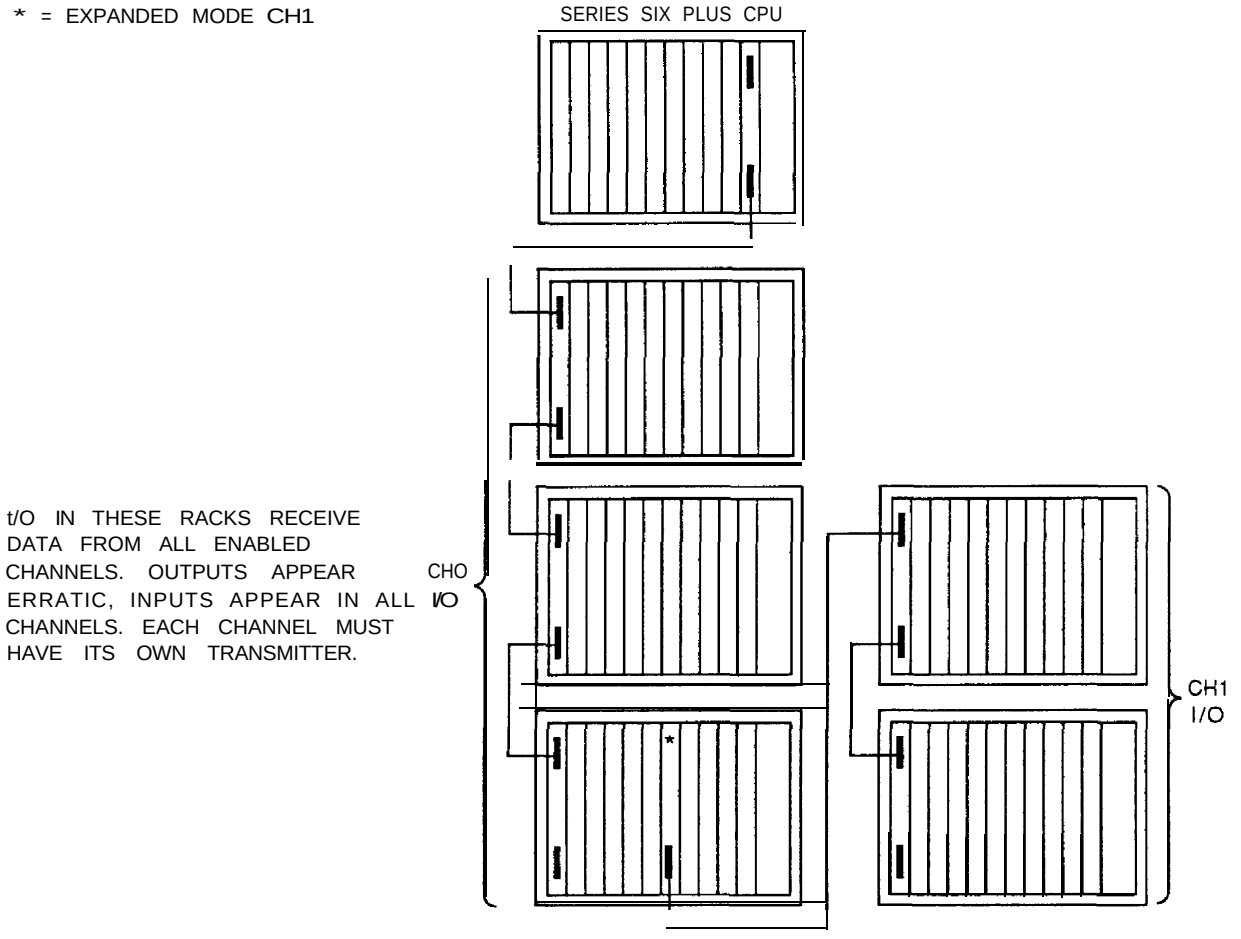

Figure 3.26 EXAMPLE 4 - INCORRECT CONFIGURATION

Artisan Technology Group - Quality Instrumentation ... Guaranteed | (888) 88-SOURCE | www.artisantg.com

System Design Considerations

When programming expanded I/O, use regular I/O references for the primary I/O. Do not use a channel 0 reference in the program. This actually maps into the auxiliary table and should be avoided. Channel 8 maps into user registers starting at 1025. This will never be solved to real I/O, but could be **used as internal points.**

The WINDOW command allows you to specify a channel number from 0 – F. The communications window that is opened as a result of executing this command is directed to only one of the Expanded I/O channels on one or the other of the I/O chains (Main or Auxiliary). In other words, a WINDOW command to channel BH (Hexadecimal) does not affect any window devices downstream from Expanded Parallel I/O Transmitters which are set for channels 0 – 7 in the Main chain or channels 0 – 2 and 4 – 7 in the Auxiliary chain. Window devices include the ASCII/BASIC Module, I/O CCM, LMM, and Series Six I/O link local module. The Genius bus controller is also a window device if window commands are issued to it. If no window commands are used, bus controllers may be used in the same address in main and auxiliary channels without conflict.

The ASCII/BASIC Module and its derivatives (LMM, I/O CCM, etc.) always report their status bytes back to the main input table, regardless of what channel they are in. An ASCII/BASIC Module at address 257 in channel E will report its 8 bits of status to main channel address 1257. Care should be taken not to address any inputs in the main channel to the same **address as any of these devices in the system.**

Artisan Technology Group - Quality Instrumentation ... Guaranteed | (888) 88-SOURCE | www.artisantg.com

Artisan Technology Group - Quality Instrumentation ... Guaranteed | (888) 88-SOURCE | www.artisantg.com

CHAPTER 4
EXPANDED CPU OPERATION

INTRODUCTION

The Series Six* Plus Programmable Logic Controller operates in one of two user selectable modes, either Normal or Expanded. Selection of the desired mode is made on the Configuration Menu screen on a Workmaster* computer using Logicmaster* 6 software. This chapter describes the Expanded functions as they are used with the Series Six Plus PLC. For detailed information on programming the Expanded functions, refer to the Logicmaster 6 Programming and Documentation Software User's Manual, GEK-25379.

All existing features, functions, I/O modules, programming devices and peripheral devices currently available for the Series Six PLCs can be fully used by the Series Six Plus PLC.

NORMAL MODE OF OPERATION

In the Normal mode of operation, the Series Six Plus CPU scans the Main I/O chain and the Auxiliary I/O chain in the same manner as in Series Six PLCs. In the Normal mode, the maximum number of I/O points available is 4000; 1000 Inputs and 1000 Outputs in the Main I/O chain and 1000 Inputs and 1000 Outputs in the optional Auxiliary I/O chain. Additionally, direct addressing of all 16K words of Register memory with all Advanced functions is supported.

EXPANDED FUNCTIONS

With the Expanded functions option, the Series Six Plus PLC has access to and can perform many additional functions when compared to the Series Six PLCs. These functions are:

1. Expanded I/O. Up to 16 channels (8 on Main I/O chain, 8 on Auxiliary I/O chain) of I/O can be configured within a range of stop and start addresses configured by the user with a Workmaster computer using Logicmaster 6 software. Each channel has 100 Inputs and 1000 Outputs. The I/O scanning is done exactly as in the Series Six PLC with the Auxiliary I/O chain scanned in parallel with the Main I/O chain. I/O scanning takes 7 ms for each pair (0 and 8, 1 and 9, etc.) of channels that have been enabled through the Configuration Menu. In the Expanded I/O mode, only the Expanded I/O channels that have been enabled will be scanned.

2. In addition to the existing 4K of discrete references supported by the Series Six PLC (I, 0, Al, AO), an additional 62K of discrete expanded I/O references are supported (30K real I/O, 32K internal I/O).

3. Configurable features. Through Logicmaster 6 software, release 3.01 and later, the user can enable configurable features, including the Expanded I/O, Genius I/O diagnostics, expanded time reference and the computer mail box.

4. Seven function floating point arithmetic which includes floating point addition, floating point subtraction, floating point multiplication, floating point division, floating point compare, integer to floating point conversion and floating point to integer conversion.

Artisan Technology Group - Quality Instrumentation ... Guaranteed | (888) 88-SOURCE | www.artisantg.com

5. Genius I/O diagnostics. Through user configuration, the CPU maintains a fault status image of the Genius I/O system. Faults are reported and logged in the CPU, then interpreted by Logicmaster 6 software.

6. A computer mail box is provided for communications with Genius I/O Bus Controllers and intelligent modules.

7. Window function. An enhanced DPREQ function allows the user specification of channel, address and COMM block.

8. The DO I/O function has been expanded to include the channel number for the start and end addresses.

9. Time Reference. This is a real-time clock maintained by the CPU which uses three consecutive registers to keep track of days, hours, minutes, seconds and tenth of seconds. It is used by the CPU to keep track of fault occurrences.

In addition, when the Expanded II functions option is selected, a faster scan rate is provided, instructions are available for accessing an alternate I/O system to be available in the future, a dynamic user program memory checksum provides more data integrity by detecting certain types of errors not caught by memory parity checking, and a way to detect if there are any overrides active in the system is provided.

SERIES SIX PLC I/O DIAGNOSTICS FOR SERIES SIX PLUS PLCs

All of the I/O diagnostic features used with earlier models of Series Six PICs are valid for use with Series Six Plus PLCs. The address recorded for parity errors includes a channel number for Expanded I/O systems. The channel number is stored in the Scratch Pad in location SP(10). If a parity error is detected while the Expanded I/O mode is not selected or while channel 0 or 8 are being scanned, the value in SP(10) will be set to 80H (Hexadecimal).

I/O Transmitter Diagnostic Feature

Data received at the CPU from each I/O Transmitter is placed in the input status table for input bits I1017 through 11024 for channel 0, AI1017 through AI1024 for channel 8 and IX+1017 through IX+1024 for channels 1-7 and 9-F. The data in this status byte is: bits 1-3, channel number; bit 4, card present; bits 5 and 6, set to 0; bit 7, fault trap enable; bit 8, fault present. If the I/O Transmitter does not respond when addressed, nothing will be written to the input locations for that channel. The channel w i Ill be scanned regardless of whether the module responded or not. Through user logic, this byte can be cleared each sweep to determine if the I/O Transmitter responded when addressed.

INTERRUPT MODULE LOCATION

A maximum of two Interrupt Input modules can be used (1 in the Main I/O chain and 1 in the Auxiliary I/O chain) in an Expanded I/O system. The Interrupt Input module for each chain can be placed in any channel in each of the chains. The I/O Transmitter modules pass the interrupt signal through to the CPU at all times. The interrupt input data is placed in the Main Input status table in bits I1001through I1008 for the Main I/O chain and AI1001 through AI-1008 for the Auxiliary chain.

Artisan Technology Group - Quality Instrumentation ... Guaranteed | (888) 88-SOURCE | www.artisantg.com

NORMAL MODE I/O ADDRESSING

The Series Six Plus PLC allows I/O to be configured in either the Normal mode or the Expanded I/O mode. Selection of the I/O mode is made through the Configuration Menu using Logicmaster 6 software. In the Normal mode, one I/O chain per CPU is permitted (this is the factory default setting). In this mode, available I/O is 1000 Inputs/1000 Outputs in the Main I/O chain, plus an additional 1000 Inputs/1000 Outputs in the Auxiliary I/O chain, if an Auxiliary I/O module is included in the system. It should be noted that each chain actually has 1024 inputs and Outputs, however, only the first 1000 are available for I/O. References 1001 through 1024 are reserved for special use.

The ON or OFF state of the 1K Inputs and 1K Outputs in the main I/O chain are maintained in the I/O Status Table. The ON or OFF states of I/O points in the Auxiliary I/O chain are maintained in the Auxiliary I/O Status Table which is mapped into the first 128 words of Register memory. R0001 to R0064 contains the Auxiliary Output Table, and R0065 to R0128 contains the Auxiliary Input table.

EXPANDED MODE I/O ADDRESSING

When the Expanded I/O mode is selected through the Configuration Menu (a jumper must also be configured on each I/O Transmitter that is to drive a chain), a total of 8K Inputs and 8K Outputs in the Main I/O chain are available to the user. In addition, if the Auxiliary I/O chain is selected (requires an Auxiliary I/O module) 8K Inputs and 8K Outputs are available in the Auxiliary chain. The total real I/O available through the use of both chains is therefore 16K Inputs and 16K outputs (32K total points). The I/O references O0001 - O1024, I0001 - I1024 are used as real I/O references for channel 0 and AO0001 - AO1024 and AI0001 - AI1024 are used as real I/O references for channel 8. These references, in addition to channel 1 through 7 and 9 through F references for real world I/O and 32K of internal references available in the Expanded mode provide an additional 64K of discrete references in a Series Six Plus PLC.

I/O Channels

I/O points in the Expanded mode are selected in 1 K increments, referred to as channels. An I/O Transmitter module (configured for Expanded Mode) is required to originate each channel of I/O, with the exception that if channels 0 and 8 are the only Expanded mode channels selected, an I/O Transmitter is not needed for channel origination, since the I/O is scanned in the same manner as the Main and Auxiliary f/O chains when in the Normal mode. If more than two channels are to be used, I/O Transmitters are required. The CPU scans only those channels that have been selected. *Any downstream I/O Transmitters in a chain must be configured for the Normal Mode. This is true for both the Normal and Expanded Modes of operation.*

A maximum of eight I/O Transmitters are required for channel origination in each of the two chains. If the maximum of 16 I/O Transmitters is used (8 in each chain), 16K Inputs and 16K Outputs are available to the user. The channel number to be associated with each I/O Transmitter is selected by setting the first 3 switches (switches 1, 2, 3) on the DIP switch package on the backplane adjacent to the module as shown in figure 4.1. The total number of I/O Transmitters is determined by the number required for channel origination plus any downstream I/O Transmitters used in each channel, as determined by the system configuration.

Artisan Technology Group - Quality Instrumentation ... Guaranteed | (888) 88-SOURCE | www.artisantg.com

CHANNEL NUMBER		DIP SWITCH POSITION		
MAIN CHAIN	AUXILIARY CHAIN	3	2	1
0	8			
1	9			•
2	A		•	
3	B		•	•
4	C	•		
5	D	•		•
6	E	•	•	
7	F	•	•	•

A dot indicates that a switch is in the OPEN position (depressed to the left). All other switch segments should be in the CLOSED position (depressed to the right).

Figure 4.1 I/O TRANSMITTER DIP SWITCH SETTINGS FOR EXPANDED t/O CHANNEL SELECTION

Channel Reference Numbering

The individual channels are numbered from 0 to F; the Main I/O chain channels are 0 through 7 and the Auxiliary I/O chain channels are 8 through F.

The format for addressing I/O in the Expanded mode must include either the prefix I or O, a channel number (except for channel 0 and 8; for channel 0 programming references use OXXXX and IXXXX, for channel 8 programming references use AOXXXX and AIXXXX), a real I/O (+) or internal I/O (-) reference identifier and the I/O reference number. This format is shown in figure 4.2.

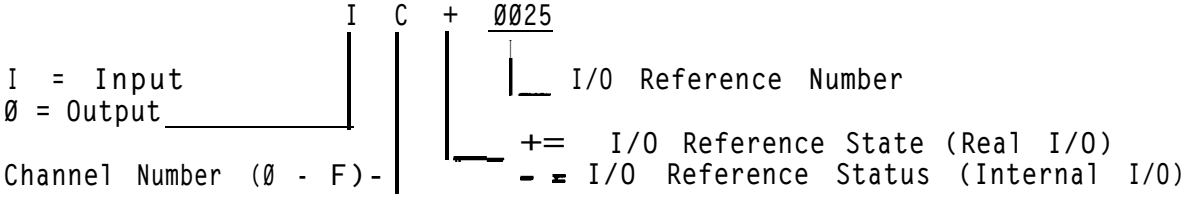

Figure 4.2 EXPANDED I/O REFERENCE FORMAT

Thus, for example, the format for real world I/O points for channel 3 in the Main I/O chain is I3+0001 to I3+1024 for Inputs and O3+0001 to O3+1024 for Outputs. Each 1K channel requires 64 words of memory (64 words x 16 bits = 1024 I/O). Note that although 1024 bits are available in each channel, 0001 to 1000 are used for actual I/O points. 1001 to IO24 are reserved for special use.

Artisan Technology Group - Quality Instrumentation ... Guaranteed | (888) 88-SOURCE | www.artisantg.com

NOTE

Ensure that when referencing an I/O point in a program, a prefix is added to properly address the applicable I/O chain. *Normal mode references address the Main and Auxiliary I/O chains, for example I0234, O0346, AI0222, AO0456,* etc. Expanded mode references for channels 1 through 7 and 9 through F include the channel number, for example, I3+0101, O3+0101, IB+0234, OB+0567, etc. The individual module DIP switch settings for I/O points 1 to 1000 are the same for each chain or channel, only the prefix is different.

Real I/O Mapping

In the Expanded mode, the "real world" I/O points for Channel 0 are scanned on the Main I/O chain and their status is maintained in the Main I/O status table. Channel 8, which is the first Auxiliary I/O channel in Expanded mode, is scanned on the Auxiliary I/O chain with its I/O status maintained in Registers R0001 through R0128, which is the same as the Auxiliary I/O status table for the Normal mode Auxiliary I/O chain. Channels 1 through 7 of real I/O are mapped into Registers R0129 through R1024 and the Auxiliary channel real I/O, Channels 9 through F are mapped into Registers R1153 through R2048.

Internal Mapping of Discrete References

The internal discrete references for Channels 0 through 7, which can be used for program references to control real inputs or outputs or Genius fault status, are mapped-into Registers R2049 through R3072. The internal references for Auxiliary channels 8 through F are mapped into Registers R3073 through R4096. The Register Memory, located on the Combined Memory module is a 16-bit user accessible storage area of memory used for data storage and for data (bit) manipulation by many mnemonic functions. Many of these registers have special significance to system operation.

Register Memory Size

The maximum register storage available in a system is determined by the Combined Memory module selected. The user must also verify the maximum registers in a system by making a selection on the Configuration Menu with Logicmaster 6 software. The selections available are 256, 1 K, 8K and 16K registers. Note that if the smaller register sizes are selected, the register use should be such that if a larger register size is later used, the registers used are compatible. Figures 4.3, and 4.4 illustrate register memory use for each of the register sizes.

NOTE

The 256 word register memory option is not currently compatible with Genius I/O diagnostics and should not be selected for that use.

Artisan Technology Group - Quality Instrumentation ... Guaranteed | (888) 88-SOURCE | www.artisantg.com

REGISTER RANGE 8K	REGISTER RANGE 16K	REGISTER CONTENTS
R0001	R0001	1K OUTPUTS (A00001 - A01024) (1, 3) 1K INPUTS (AI0001 - AI1024)
R0128	R0128	
R0129	R0129	7K OUTPUTS (01+0001 to 07+1024) (3) 7K INPUTS (I1+0001 to I7+1024)
RI024	R1024	
R1025	R1025	USER REGISTERS
R1152	R1152	
R1153	R1153	7K OUTPUTS (09+0001 - 0F+1024) (3) 7K INPUTS (I9+0001 - IF+1024)
R2048	R2048	
R2049	R2049	STATUS BITS FOR 32K I/O (or internal References), (00-0001 to IF-10241
R4096	R4096	
R4097	R4097	BUS CONTROLLER STATUS - BIT MAP
R4112	R4112	
R4113	R4113	USER REGISTERS
R4116	R4116	
R4117	R4117	CLOCK
R4119	R4119	
R4120	R4120	POINTER FOR FAULT TABLE
R4121	R4121	FAULT TABLE ENTRIES
RXXXX	RXXXX	
RXXXX	RXXXX	USER REGISTERS (4)
R8222	R16314	
R8123	R16315	COMPUTER MAIL BOX
R8192	R16384	

(1) Channel 8 real I/O is mapped into Registers 1 through 128 (references A00001 - A01024 and AI0001 - AI1024).

(2) Channel 0 real I/O is scanned on Main I/O chain (references 00001 - 01024 and I0001 - I1024).

(3) Expanded discrete references A00001 through A01024, AI0001 through AI1024 and 01+0001 through 0F+1024, and I1+0001 through IF+1024 are overlaid on the Register table. These registers are available for general use if the above references are not used.

(4) The number of registers available for general use depends on the quantity of Genius I/O fault tables selected.

Figure 4.3 MEMORY MAP FOR 8K AND 16K REGISTERS

Artisan Technology Group - Quality Instrumentation ... Guaranteed | (888) 88-SOURCE | www.artisantg.com

1K REGISTER RANGE	REGISTER CONTENTS
R000 1 R0128	1K OUTPUTS (A00001 - A01024) (1) 1K INPUTS (AI0001 - AI1024)
R0129 R0256	1K OUTPUTS (01+0001 - 01+1024) (1) 1K INPUTS (I1+0001 - I1+1024)
R0257	BUS CONTROLLER STATUS - BIT MAP
R0258 R0266	USER REGISTERS
R0267 R0269	CLOCK
R027Ø	POINTER FOR FAULT TABLE
R0271 RXXXX	FAULT TABLE ENTRIES
RXXXX R0954	USER REGISTERS (3)
R0955 R1024	COMPUTER MAIL BOX

(1) Expanded discrete references A00001 through A01024, AI0001 through AI1024 and 01+0001 through 01+1024, I1+0001 through 11+1024 are overlaid on the Register table. These registers are available for general use if the above references are not used.

(2) Channel 0 I/O is scanned on the Main I/O chain.

(31 The number of registers available for general use depends on the quantity of Genius I/O fault tables selected.

Figure 4.4 MEMORY MAP FOR 1K REGISTERS

Artisan Technology Group - Quality Instrumentation ... Guaranteed | (888) 88-SOURCE | www.artisantg.com

Expanded Mode I/O References

Table 4.1 is a list of Expanded Mode real and discrete I/O point references for each channel and their memory location.

Table 4.1 MEMORY MAP FOR EXPANDED MODE I/O REFERENCES

REAL I/O POINTS			INTERNAL DISCRETE REFERENCES	
REGISTER	I/O REFERENCE		REGISTER	I/O REFERENCE
R0001	A00001 - A01024	AUX	R2049	00-0001 - 00-1024
R0065	AI0001 - AI1024	AUX	R2113	I0-0001 - I0-1024
R0129	01+0001 - 01+1024	M	R2177	01-0001 - 01-1024
R0193	I1+0001 - I1+1024	A	R2241	I1-0001 - I1-1024
R0257	02+0001 - 02+1024	I	R2305	02-0001 - 02-1024
R0321	I2+0001 - I2+1024	N	R2369	I2-0001 - I2-1024
R0385	03+0001 - 03+1024		R2433	03-0001 - 03-1024
R0449	I3+0001 - I3+1024	I	R2497	I3-0001 - I3-1024
R0513	04+0001 - 04+1024	O	R2561	04-0001 - 04-1024
R0577	I4+0001 - I4+1024		R2625	I4-0001 - I4-1024
R0641	05+0001 - 05+1024	C	R2689	05-0001 - 05-1024
R0705	I5+0001 - I5+1024	H	R2753	I5-0001 - I5-1024
R0769	06+0001 - 06+1024	A	R2817	06-0001 - 06-1024
R0833	I6+0001 - I6+1024	I	R2881	I6-0001 - I6-1024
R0897	07+0001 - 07+1024	N	R2945	07-0001 - 07-1024
R0961	I7+0001 - I7+1024		R3009	I7-0001 - I7-1024
		A		
R1025	User Registers	U	R3073	08-0001 - 08-1024
R1089	User registers	X	R3137	I8-0001 - I8-1024
R1153	09+0001 - 09+1024	I	R3201	09-0001 - 09-1024
R1217	I9+0001 - I9+1024	L	R3265	I9-0001 - I9-1024
R1281	0A+0001 - 0A+1024	I	R3329	0A-0001 - 0A-1024
R1345	IA+0001 - IA+1024	A	R3393	IA-0001 - IA-1024
R1409	0B+0001 - 0B+1024	R	R3457	0B-0001 - 0B-1024
R1473	IB+0001 - IB+1024	Y	R3521	IB-0001 - IB-1024
R1537	0C+0001 - 0C+1024		R3585	0C-0001 - 0C-1024
R1601	IC+0001 - IC+1024	I	R3649	IC-0001 - IC-1024
R1665	0D+0001 - 0D+1024	O	R3713	0D-0001 - 0D-1024
R1729	ID+0001 - ID+1024		R3777	ID-0001 - ID-1024
R1793	0E+0001 - 0E+1024	C	R3841	0E-0001 - 0E-1024
R1857	IE+0001 - IE+1024	H	R3905	IE-0001 - IE-1024
R1921	0F+0001 - 0F+1024	A	R3969	0F-0001 - 0F-1024
R1985	IF+0001 - IF+1024	I	R4033	IF-0001 - IF-1024
		N		

(1) Channel 0 real I/O is scanned on the Main I/O chain (references 00001-01024 and I0001-I1024).

(2) Channel 8 real I/O is mapped into Registers 1 - 128 (references A00001-A01024 and AI0001-AI1024).

(3) References 00+0001 - 00+1024, I0+0001 - I0+1024 and 08+0001 - 08+1024, I8+0001 - I8+1024 cannot be used as real I/O references, but are available for use as discrete programming references.

(4) Channel 1 through 7 real I/O references are for the Expanded Main I/O Channels.

(5) Channel 9 through F real I/O references are for the Expanded Auxiliary I/O Channels.

Artisan Technology Group - Quality Instrumentation ... Guaranteed | (888) 88-SOURCE | www.artisantg.com

SUMMARY OF REQUIRED I/O REFERENCES

There are special I/O references which must be reserved for several of the optional modules used with a Series Six Plus PLC. These references have special significance for the listed modules and care must be taken when programming so that references are not overlapped, duplicated, or otherwise misused. In the following table, the use of parentheses with a reference is an indication that the reference can be changed.

Table 4.2 RESERVED I/O REFERENCES

REFERENCES	RESERVED FOR:	FUNCTION
(I0993 - I1000)	Advanced I/O Receiver	Default status byte.
I1001 - I1008	Interrupt Input	Status byte.
I1009 - I1016	Communication Control	Status byte.
I1017 - I1024	I/O Transmitter (Main chain/channel 0)	Status byte.
I1024	Redundant Processor Unit	RPU status. Set to a "1" if RPU is operating as backup CPU.
(O0993 - O1000)	Advanced I/O Receiver	Default control byte.
O1015	Override Active Detect (Main Status Table)	Override Active in System - Enable Bit
O1016	Override Active Detect (Main Status Table)	Override Active in System - Report Bit.
O1017	Redundant Processor Unit	Prevents CPU from being a master CPU, or switches to backup unit.
O1022	Redundant Processor Unit	Transfers O0001 to O1016 from master to backup CPU.
O1023	Redundant Processor Unit	Transfers R254 from backup to master CPU.
O1024	Redundant Processor Unit	Transfers registers with range specified by R255 (START) and R256 (END) from master to backup CPU.
(AI0993 - AI1000)	Advanced I/O Receiver	Default status byte.
AI1001 - AI1008	Interrupt Input	Status byte.
AO0993 - AO1000	Advanced I/O Receiver	Default control byte.

SUMMARY OF REQUIRED REGISTER REFERENCES

There are also special register references which must be reserved for several of the optional modules used with a Series Six Plus PLC. These register references have special significance for the listed modules and care must be taken when programming so that registers references are not overlapped, duplicated, or otherwise misused. In the following table, the use of parentheses with a reference is an indication that the register reference can be changed. Care must also be exercised when referencing Expanded I/O points (both real and internal) since expanded I/O is mapped into registers as described on the previous pages.

Artisan Technology Group - Quality Instrumentation ... Guaranteed | (888) 88-SOURCE | www.artisantg.com

Table 4.3 RESERVED REGISTER REFERENCES

REFERENCES	RESERVED FOR:	FUNCTION
R128	I/O Transmitter	Channel 8, Auxiliary I/O chain.
(R240 - R244)	ABM RTU Master	RTU master command registers. defaults, can be changed.
R247 - R248	Communication Control	Software configuration of CCM (optional)
(R249 - R253)	Data Processor Unit	Default status registers.
R254	Redundant Processor Unit	Status register. Content of R254 in backup CPU transferred to master or set to 0 if backup not present or unavailable.
R255	Redundant Processor Unit	Control register. Content of R255 is first register for data transfer from master to backup CPU.
R256	Redundant Processor Unit	Control register. Content of R256 is last register for data transfer from master to backup CPU.
R256	I/O Transmitter	Channel 0, Main I/O chain
R384	I/O Transmitter	Channel 2, Main I/O chain
R512	I/O Transmitter	Channel 3, Main I/O chain
R640	I/O Transmitter	Channel 4, Main I/O chain
R768	I/O Transmitter	Channel 5, Main I/O chain
R896	I/O Transmitter	Channel 6, Main I/O chain
R1024	I/O Transmitter	Channel 7, Main I/O chain
R1280	I/O Transmitter	Channel 9, Aux. I/O chain
R1408	I/O Transmitter	Channel A, Aux. I/O chain
R1536	I/O Transmitter	Channel B, Aux. I/O chain
R1664	I/O Transmitter	Channel C, Aux. I/O chain
R1792	I/O Transmitter	Channel D, Aux. I/O chain
R1920	I/O Transmitter	Channel E, Aux. I/O chain
R2048	I/O Transmitter	Channel F, Aux. I/O chain
R400 - R485	Loop Management Module	LMM Mailbox
R509, 759, 2009 2259, 3009, 3259 3509, 3759, 5009 5259, 5509, 5759 7009, 7249, 7509 7759	Loop Management Module	Required register for LMM 1 through LMM 16

Artisan Technology Group - Quality Instrumentation ... Guaranteed | (888) 88-SOURCE | www.artisantg.com

DYNAMIC USER MEMORY CHECKSUM

The Expanded II function set is provided through selection of the Logic Control module option, IC600CB515. An important feature of this function set is the user program memory checksum. The purpose of this checksum is to provide more data integrity within the user program memory. This user program checksum will trap certain types of data errors not caught by memory parity checking. Specifically, the error conditions to be caught through this checksum are; an even number of bits changed in memory and stuck address lines.

Memory Checksum Calculation

During normal operation, the CPU can detect when the logic memory has been altered by an external device (such as Logicmaster 6, etc.). When it has sensed that the memory has been changed, the CPU will begin to calculate a checksum by starting at memory location 00000 and working its way through all logic memory. The checksum is the 16 bit sum of all the words of logic memory in the CPU.

Each time that the internal executive routine is run in the CPU, 64 words of memory are summed. Since there can be a maximum of 64K words of logic memory, it is not possible to complete the entire checksum in one scan. Therefore, the checksum will take a maximum of 1024 scans to be calculated. When the CPU completes the calculation it stores the checksum in the Scratch Pad. It will then recalculate the checksum, and when once again completed, the resulting calculation is compared with the previously stored checksum. If this calculated number disagrees with the number stored in the Scratch Pad, the CPU will STOP (if it is running) and de-energize Alarm 1. It will also set error flags in the Scratch Pad.

The checksum calculation continues while the CPU is in the STOP mode. The calculation adds about 150 us to the CPU's executive routine. The total time for the checksum calculation for the maximum 64K words of memory with a 150 ms sweep is 153 seconds.

Logicmaster 6 Display of Checksum Error

The checksum is displayed on the Scratch Pad screen display if Logicmaster 6 is in the on-line or monitor mode. It is not displayed when Logicmaster 6 is in the off-line mode. If a checksum error is detected, the message LOGIC MEMORY CHECKSUM ERROR is displayed below the CPU ERROR FLAGS line at the bottom of the Scratch Pad display.

Restarting a CPU Stopped by a Checksum Error

The CPU also recalculates the checksum when the CPU is powered-up or switched from STOP to RUN if the memory protect switch is set to the WRITE position. If the key switch is set to the PROTECT position, the checksum error fault indication will remain in the Scratch Pad and the CPU will not be able to be restarted unless either the keyswitch is switched to WRITE or the fault indication in Scratch Pad locations SP (07) and (09) are cleared by an external device.

A recalculation of the checksum when the CPU is restarted is desired if a Logic Memory board is replaced and the CPU is then restarted. Normally, the CPU should be left in PROTECT which allows the checksum feature to catch any memory changes that occurred while the CPU was powered down.

Artisan Technology Group - Quality Instrumentation ... Guaranteed | (888) 88-SOURCE | www.artisantg.com

CONFIGURATION OF EXPANDED FUNCTIONS THROUGH LOGICMASTER 6 SOFTWARE

In order to configure the Expanded Functions, a Workmaster computer, CIMSTAR I computer, or an IBM-PC, PC-XT, or PC-AT Personal Computer with Logicmaster 6 applications software, version 3.01 or greater is required for programming. This is required to enable configurable features, which include expanded I/O, Genius diagnostics, expanded time reference and the computer mail box. Each of these configurable features can be selectively enabled and configured for its range of operation. The required configuration is automatically entered into the first 24 words of the CPU user memory as it is selected and entered from a configuration menu. The first word of memory (location 0000) must be programmed by the user with the [SERIES SIX CONFIGURATION DATA] instruction.

Standard features included with the expanded functions that do not require configuration include expanded discrete and register references, the Window function and floating point arithmetic. An improved basic compare instruction has been added which allows any reference A to be compared to any reference B. The previous form of this instruction only allowed registers to be compared.

EXPANDED FUNCTIONS MENU

In order to access the configuration menu, the Expanded Functions screen must first be selected from the Supervisor menu. When the Expanded Functions (F7) key is pressed from the Supervisor menu, the Expanded Functions screen appears as shown below.

```
                    L O G I C M A S T E R ( T M ) 6
                 E X P A N D E D  F U N C T I O N S


KEY #                                                    FUNCTION

F1 - CPU CONFIG . . . . . . . Display/Modify CPU Configuration
F2 - I/O Faults . . . . . . . .Display/Clear Genius I/O Faults
F3 - COMM SET UP. . . . .Display/Modify Communications Setup (serial ver.)
F4 - MSD FUNC . . . . . . . .Display/Modify Machine Setup Data
F8 - SUPERV MENU . . . . . . . . . .return to Supervisor Menu


     CPU                    MSD                                  SUPERV
   1CONFIG  2FAULTS  3SET UP 4FUNC        5        6        7        8 MENU
```

The applicable function key is then pressed to select the desired Expanded functions.

CPU CONFIGURATON Select DISPLAY/MODIFY CPU CONFIGURATION to display the CPU Configuration menu.

I/O FAULTS Select DISPLAY/CLEAR Genius I/O FAULTS to display the Genius I/O Faults screen.

COMMUNICATIONS SET UP
This function key is displayed only for the Serial versions. Select COMM SET UP to set up the system parameters for communicating with the CCM card.

Artisan Technology Group - Quality Instrumentation ... Guaranteed | (888) 88-SOURCE | www.artisantg.com

CPU CONFIGURATION SET UP MENU

The CPU Configuration Set Up Menu is used to select Genius I/O Bus Controller locations in the Expanded I/O, to enable expanded I/O scanning, to enable Genius I/O diagnostics, and to enable the Computer Mail Box.

NOTE

Logicmaster 6 software includes HELP screens for information on Expanded I/O mapping. These screens display information relative to avoiding multiple use of registers when using modules that reference particular registers (ASCII/BASIC, Loop Management Module, etc.).

The following configurable items are described on the following pages:

- How to display the CPU Configuration Set Up menu.
- How to enable and set the range for Expanded I/O scanning.
- How to enable and set the range for Genius I/O diagnostics.
- How to display the Bus Controller Map menu.
- How to select the use of the Computer Mail Box.

The Configuration Set Up Menu can only be displayed in the On-Line or Monitor mode if the current program includes the CPU Configuration instruction [SERIES SIX CONFIGURATION DATA]. To display the CPU Configuration Set Up menu when in the On-Line or Monitor mode, follow the steps below:

1. The program must be present in system memory. If it is not, load it using the Load/Store/Verify functions. Return to the Supervisor menu.

2. From the Supervisor menu, press the Expanded Functions (F7) key.

3. From the Expanded Functions menu, press the CPU Configuration (F1) key. The menu will then be displayed as shown below.

```
        C P U   C O N F I G U R A T I O N   S E T   U P   M E N U

EXPANDED I/O        ENABLED                  N       (Y/N)
SCAN:
                    BEGIN RANGE    CHANNEL 0  POINT    1
                    END RANGE      CHANNEL 7  POINT 1024

GENIUS I/O          DIAGNOSTICS ENABLED      Y       (Y/N)
DIAGNOSTICS:        DIAGNOSTIC TABLES        Y       (Y/N)
                    B/C -> POINT FAULTS      N       (Y/N)
                    DIAGNOSTIC RANGE LIMIT 7         (0-7)   CHANNELS
                    CPU REGISTER SIZE 16,384                 REGISTERS
                    FAULT TABLE LENGTH       8               ENTRIES
                    BUS STATUS/CONTROL
                    BYTE LOCATION          993

COMPUTER MAIL BOX:  ENABLED                  N       (Y/N)

  B/C                                                          XPNDED
1 MAP   2       3       4           5       6       7       8 FUNCS
```

Artisan Technology Group - Quality Instrumentation ... Guaranteed | (888) 88-SOURCE | www.artisantg.com

Making Entries on the CPU Configuration Set Up Page

The CPU Configuration Set Up Menu is used to enable Expanded I/O scan, Genius I/O diagnostics, and the Computer Mail Box. Entries made on this page change the program file in system memory. They do not change the user program in the CPU.

If the system is in On-Line or Monitor mode, changes are made to the program logic only. If the system is in Off-Line mode, changes are made to the logic and the table data.

To edit this display, move the cursor to the item you want to change, and type in the new value. Refer to the definitions that follow for more information.

Cancelling Entries to the CPU Configuration Set Up Menu

To cancel entries and return to the Expanded Functions menu, press the Abort key. The screen displays:

```
PRESS CONFIRM TO ABORT, ANY OTHER KEY TO PROCEED
```

Press the Confirm key to return to the values that were displayed when the page was entered. Press any other key to cancel the abort.

CPU CONFIGURATION MENU: DEFINITIONS

Refer to the following definitions when changing the CPU Configuration Set Up Menu. The entries on this page are stored in the Configuration function in the program.

EXPANDED I/O SCAN

ENABLED: Y, Default = Y, for Expanded I/O scanning by the CPU. For normal I/O scanning, enter N. Note that Expanded I/O is not required for Genius I/O diagnostics on Bus Controllers located in the Main and Auxiliary status tables. Expanded I/O must be enabled to use the diagnostics on Bus Controllers located on channels 1-7 and 9-F.

BEGIN RANGE: If Expanded I/O scanning is enabled, this entry specifies the channel and Point number within the channel where the Expanded I/O scan should begin. The default range is all channels and points. Change these entries to select a smaller scan range.

Artisan Technology Group - Quality Instrumentation ... Guaranteed | (888) 88-SOURCE | www.artisantg.com

CPU CONFIGURATION MENU: DEFINITIONS (Continued)

The I/O structure in an expanded I/O system consists of as many as 8 main channels (numbered 0 – 7) and 8 auxiliary channels (8 – F). Valid entries for Begin Range and End Range Channel are 0 to 7. Each of these specifies a main/auxiliary channel I/O pair:

CHAINS: MAIN CHANNELS	AUXILIARY
0	8
1	**9**
2	**A**
3	**B**
4	C
5	D
6	**E**
7	**F**

The value for Point is the I/O point from 1 to 1024 in the specified channel. The system rounds this value to a byte boundary.

END RANGE: The channel number and Point number within the channel where the Expanded I/O scan should end. This must be greater than the value for Begin Range.

GENIUS I/O:

DIAGNOSTICS ENABLED: Default = Y, to enable the minimum Genius I/O diagnostics (for everything except the diagnostic tables). For no Genius I/O diagnostics, enter N.

DIAGNOSTIC TABLES: Default = Y, to cause a Bus Controller Status Bit Map to contain the locations of Bus Controllers that have reported errors. In addition, a Point Status Bit Map will specify any real I/O points that indicate failures by a block, point, or Bus Controller fault. For no Genius I/O diagnostics tables, enter N.

B/C -> POINT FAULTS: Default = N, to cause Bus Controller errors to tell the CPU to set all 208 input and 208 output point fault bits associated with that Bus Controller to a 1. The user must exercise caution when referencing any of these points, since all will be set to a 1 following a Bus Controller failure.

If all blocks are assigned to addresses within the same 256 register segment as the Bus Controller, then a fault of the Bus Controller equals a fault of all I/O. If all addresses are not assigned as above, this feature should not be used.

Artisan Technology Group - Quality Instrumentation ... Guaranteed | (888) 88-SOURCE | www.artisantg.com

CPU CONFIGURATION MENU: DEFINITIONS (Continued)

GENIUS I/O: (cont)

DIAGNOSTIC RANGE LIMIT: The range, by channel pairs, of the diagnostics. Range = 0 to 7. Default = 7, which is 8 pairs of channels to be checked.

CPU REGISTER SIZE: Enter the exact register size of the CPU:

256 (Currently not compatible with Genius diagnostics)
1024 (can be represented by entering a 1)
8192 (can be represented by entering an 8)
16384 (can be represented by entering a 16)

Default = the number of registers indicated by the Scratch Pad.

The availability of register memory regulates the number of I/O points on which Genius I/O diagnostics will be performed. For a register size of 1K diagnostics are performed up to the first 1024 inputs and 1024 outputs of the Main I/O chain. Maximum register sizes of 8K or 16K allow the CPU to perform diagnostics on the maximum 16K inputs and 16K outputs.

The inputs and outputs included are the Main I/O chain (Main I/O status table, I/O channels 1+ to 7+) and the Auxiliary I/O chain (Auxiliary I/O status table, I/O channels 9+ to F+).

FAULT TABLE LENGTH: The maximum size of the fault tabte, which depends on the CPU size, and on whether the Computer Mail Box has been enabled. Maximum table sizes are listed below. Default = 8.

REGISTER SIZE	MAXIMUM TABLE LENGTH * COMPUTER MAIL BOX ENABLED? NO	YES
1K	75	68
8K	406	399
16K	1225	1218

*** Each table entry is equal to IO registers.**

BUS STATUS/CONTROL BYTE LOCATION: Some of the bits in the original I/O status table can be used to enable and monitor some of the Genius I/O functions. This is the main I/O point address where the diagnostics' discrete status (input table) and control (output table) bytes are located. Allowable entries are 0001 through 1017. Default = 0993.

Artisan Technology Group - Quality Instrumentation ... Guaranteed | (888) 88-SOURCE | www.artisantg.com

COMPUTER MAIL BOX: Default = N. To use the Computer Mail Box, change this entry to Y. If set to Y, the CPU will open a communications window to any valid address located in the first register of the Computer Mail Box. The window opens once per sweep, when the CPU is in the RUN mode. The address is placed in the register using a Window function.

DISPLAYING AND EDITING THE GENIUS BUS CONTROLLER LOCATIONS PAGE

The Genius Bus Controller Locations page is used to specify the locations of the Bus Controllers within the Expanded I/O channels of the Series Six Plus PLC.

To display the Bus Controller page, press the Bus Controller Map (F1) key from the CPU Configuration Set Up Menu.

```
        G E N I U S   B U S   C O N T R O L L E R   L O C A T I O N S

                CURSOR:     CHANNEL  0        LOCATION  0001

      MAIN CHAIN                                  AUX.  CHAIN
 CHANNEL        LOCATIONS                    CHANNEL        LOCATIONS

    0      00000000 01000001                    8       10000001 00010001
    1      00001000 10000000                    9       00011000 01010000
    2      00000000 01010101                    A       10000001 00010001
    3      00001000 10000000                    B       00011000 01010000
    4      00000000 10101010                    C       10000001 00010001
    5      00000100 10000010                    D       00011000 01010101
    6      00000000 01010101                    E       10000001 00010001
    7      00001000 10000000                    F       00011000 01010101

          INSERT                                                  CPU
  1      2  BC   3       4              5    6         7       8CONFIG
```

Editing the Bus Controller Map

The display shows the 16 Expanded I/O channels. Beside each, there are 16 bits. Each binary bit corresponds to a possible Bus Controller location. Current cursor position is shown by a reverse video block. The rightmost bit in each channel represents I/O location 1 of that channel. Each successive bit to the left is a location that is 64 greater, since each Bus Controller must be on a 64 bit (8 byte) boundary. The leftmost bit in each channel represents location 961. Each bit with a value of 1 represents a Bus Controller location in the I/O system. To change the value of a bit:

1. Use the cursor keys or the Return key to move the cursor to the bit.
2. Press the Insert/Delete Bus Controller (F2) key to change the bit.

Cancelling Changes to the Bus Controller Map

To exit and restore the values that were displayed when the page was entered, press the Abort key. The screen prompts:

```
PRESS CONFIRM TO ABORT, ANY OTHER KEY TO PROCEED
```

Press the Confirm key to exit, or press any other key to cancel the abort.

Artisan Technology Group - Quality Instrumentation ... Guaranteed | (888) 88-SOURCE | www.artisantg.com

DISPLAYING AND CLEARING GENIUS I/O FAULTS

As faults occur in any of the Genius I/O blocks, they are written, through the Bus Controller, to the Genius I/O fault table in the CPU. Through the previous menu, the location of the Bus Controllers was defined and the fault table length was specified.

The following pages explain how to access and display the fault tables, define the items on the fault table, and how to clear any of the recorded faults.

Displaying The GENIUS I/O Fault Table

The Genius I/O Fault Table display shows the Genius I/O faults. Faults are shown in order of occurrence, with the first fault at the top. The table can only be displayed if the current program includes the Configuration function. In addition, Genius I/O diagnostics must be enabled in the CPU Configuration Set Up Menu, and the Workmaster must be On-Line or Monitor.

To display the Genius I/O Fault Table, follow the steps below:

1. The program must be present in system memory. If it is not, load it using the Load/Store/Verify functions. Return to the Supervisor menu.

2. From the Supervisor menu, press the Expanded Functions (F7) key.

3. From the Expanded Functions menu, press the I/O Faults (F2) key. The Genius I/O fault Table screen will then be displayed as shown below.

```
                G E N I U S   I/O   F A U L T   T A B L E

   TOTAL FAULTS: 0000                                          date
   FAULT DISPLAYED:                                            time
                                                   0000:00:00:00:0

B/C   POINT  CIRC      FAULT        FAULT        FAULT
ADDR. ADDR.  NO.      CATEGORY      TYPE      DESCRIPTION    DAY:HR:MN:SC:T
----- ------ ---- ---------------- -------- ---------------- --------------




    NEXT    PREV   CLEAR                                     XPNDED
  1 PAGE  2 PAGE  3FAULTS 4 TOP      5BOTTOM 6        7       8 FUNC
```

Artisan Technology Group - Quality Instrumentation ... Guaranteed | (888) 88-SOURCE | www.artisantg.com

GENIUS I/O Fault Table Definitions

If a fault occurs that has more than one cause (see the definition of Fault Category, below) each cause is listed as a separate line in the table. The entries in the table show the following information about a fault:

B/C ADDR. — **BUS CONTROLLER ADDRESS: Displayed for a Bus Controller error. This entry has two fields:**

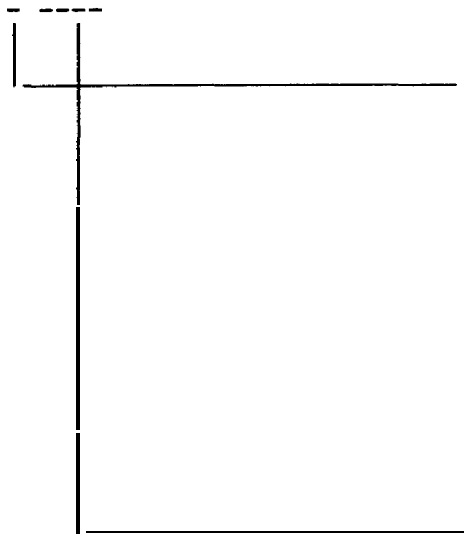

Channel Number: The number of the channel where the error occurred. A hex value from 0 to F:

MAIN	AUXILIARY
0	8
1	9
2	A
3	B
4	C
5	D
6	E
7	F

Byte Address: The byte address of the error. Range = 0 to 125.

POINT ADDR. — **POINT ADDRESS: Not displayed if the error is a Bus Controller or Serial Bus fault. This entry has two fields:**

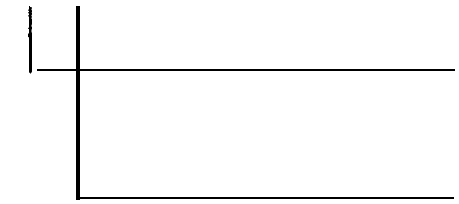

Input/Output: The first two characters indicate an input (I) or output (0). Both may appear at the same time.

Address: The address of the error. Range = 1 to 1000.

CIRCUIT NUMBER: **Displayed only for a circuit fault. Range = 1 to 16. The number displayed corresponds to a circuit number within a block.**

FAULT CATEGORY: **This entry shows the category of error that has occurred:**

```
IOC FAULT
BUS ERROR
CIRCUIT
LOSS OF BLOCK
BLOCK ADDITION
ADDRESS CONFLICT
EEPROM FAILURE
????????????????   (displayed for multiple errors)
```

Artisan Technology Group - Quality Instrumentation ... Guaranteed | (888) 88-SOURCE | www.artisantg.com

FAULT TYPE: The error type: BLOCK, DISCRETE, or ANALOG.

FAULT DESCRIPTION: Displayed only if the Fault Category is CIRCUIT FAULT. Multiple lines may be displayed. Possible descriptions are:

BLOCK	SWITCH FAILED
DISCRETE	SWITCH FAILED
	OVER TEMP
	NO LOAD
	OPEN WIRE
	OVERLOAD
	SHORT CIRCUIT
	LOSS OF POWER
ANALOG	INPUT HIGH ALARM
	INPUT LOW ALARM
	OUTPUT UNDERRANGE
	OUTPUT OVERRANGE
	INPUT OPEN WIRE
	INPUT UNDERRANGE
	INPUT OVER RANGE
	CHANNEL NUMBER

FAULT TIME: The day, hour, minute, second, and tenth of a second when the error occurred, derived from the CPU's real-time clock.

Viewing Additional Fault Listings

In order to display or print additional faults in the table, follow the steps below.

To move the display down one line at a time, press the Next key or the Down Cursor key.

To move the display up one line at a time, press the Prev key or the Up Cursor key.

To move the display down one page at a time, press SHIFT/NEXT or Next Page (F1).

To move the display up one page at a time, press SHIFT/PREV or Prev Page (F2).

To go to the top of the table, press the Top (F4) function key. To go to the end of the table, press the Bottom (F5) function key.

Clearing Faults

Use the Clear Faults (F3) key to clear the Fault Table. This sets the fault count to zero, and clears the fault data at the Genius I/O blocks. Subsequent incoming faults fill the Fault Table beginning with the next available location, with the oldest data at the top. This will cause the Bus Controller to issue a CLEAR ALL FAULT command (see the Genius I/O System User's Manual for further information).

Artisan Technology Group - Quality Instrumentation ... Guaranteed | (888) 88-SOURCE | www.artisantg.com

FLOATING POINT FUNCTIONS

Seven function floating point arithmetic has been implemented as a feature of the Expanded Functions. The available floating point functions are:

- Floating Point Addition
- Floating Point Subtraction
- Floating Point Multiplication
- Floating Point Division
- Floating Point Compare
- Integer to Floating Point Conversion
- Floating Point to integer Conversion

Floating Point Display Format

Two registers are required to represent each Floating Point reference which is stored in IEEE format. The display for the Floating Point Arithmetic Functions is in decimal scientific notation as shown in figure 4.5.

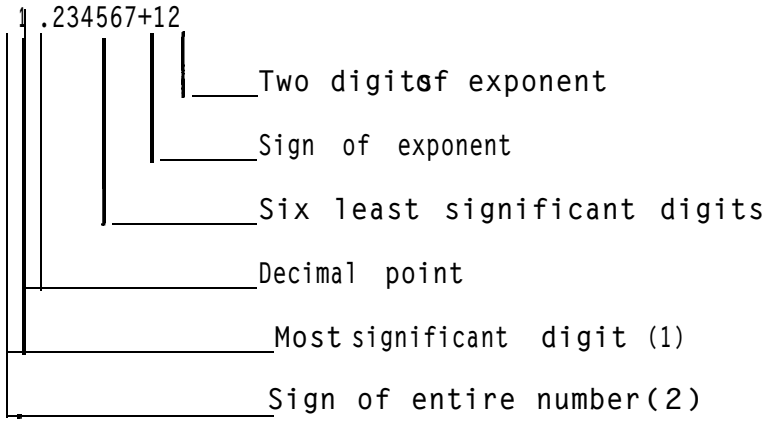

Figure 4.5 FLOATING POINT ARITHMETIC DISPLAY FORMAT

(1) Will only be zero (0) when all digits are zero.
(2) The + (plus) sign is implied and not displayed. The - (minus) sign will always be displayed.

Floating Point numbers are stored in two consecutive registers as shown below.

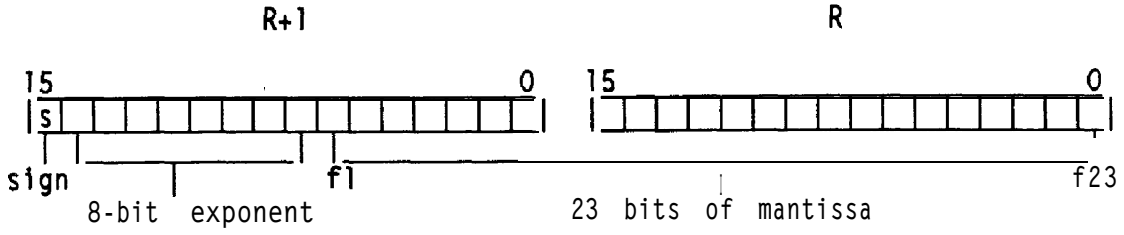

Valid Number Format

The display format requires a total of 12 character spaces and is limited to 7 significant digits. With 7 digits, any valid number can be stored in the 32 bits (2 registers) allocated for floating point numbers. A number greater than 7 digits does not conform to the IEEE

Artisan Technology Group - Quality Instrumentation ... Guaranteed | (888) 88-SOURCE | www.artisantg.com

32-bit format and is considered to be not a number. The references to infinity refer to the limits for numbers that may be operated on. These limits are $+/-3.402823^{+38}$. An attempt to exceed these limits will be interpreted by Logicmaster 6 software as an overflow.

Programming Floating Point Arithmetic Functions

All of the Floating Point functions are entered on the programmer using Logicmaster 6, version 3.01 or later software. When entering a Floating Point function, conditional logic to control power flow to the function should be entered before the function. If conditional logic is not entered, the function will execute unconditionally with every sweep.

To access Floating Point Arithmetic, with the programmer, select Advanced Mnemonic Group (F7), then Expanded Arithmetic (F2), then Floating Point Arithmetic (F6). Next the desired Floating Point Arithmetic function is selected with the applicable soft key.

KEY	MNEMONIC	FUNCTION
(FI)	FADD	Floating Point Addition
(F2)	FSUB	Floating Point Subtract ion
(F3)	FMULT	Floating Point Multiplication
(F4)	FDIV	Floating Point Division
(F5)	FP GREATER THAN	Floating Point Compare
(F6)	INTEGER TO FLOATING POINT	Integer to Floating Point Conversion
(F7)	FLOATING POINT TO INTEGER	Floating Point to Integer Conversion

For detailed information on how to enter the Floating Point functions, refer to the Logicmaster 6 User's Manual, GEK-25379.

Floating Point Addition

Program a Floating Point Addition function to add a floating point value in reference A to the floating point value in reference B and place the result in reference C.

Every scan that power is received, the FADD function calculates the result using floating point mathematics. The result is placed in reference C. Only the content of reference C is altered by this function.

The function will output power flow if overflow occurs, if references A and B are opposite signed infinities, or if either reference A or B is not a number.

Floating Point Subtraction

Program a Floating Point Subtraction function to subtract a floating point value in reference B from the floating point value in reference A and place the result in reference C.

Artisan Technology Group - Quality Instrumentation ... Guaranteed | (888) 88-SOURCE | www.artisantg.com

Every scan that power is received, the FSUB function calculates the result using floating point mathematics. The result is placed in reference C. Only the content of reference C is altered by this function.

The function will output power flow if overflow occurs, if references A and B are infinities having the same sign, or if either reference A or B is not a number.

Floating Point Multiplication

Program a Floating Point Multiplication function to multiply the value in reference A by the value in reference B and place the result in reference C. Every scan that power flows to the function, the system multiplies the value in reference A by the value in reference 8 and places the signed result in reference C. The possible sign of the result is shown below.

Reference A	Reference B	Reference C
+	+	+
+		
–	+	–
–	–	+

Floating Point Multiplication will not normally output power flow, except under the follow ing conditions.

1. The result is too big to store (overflow).
2. The result is too small to represent (underflow).
3. Either reference A or B is infinity and the other is zero.
4. Either reference A or B is not a number (invalid format).

Floating Point Division

Program a Floating Point Division function to divide the value in reference A by the value in reference B and place the result in reference C. The possible signs:

Reference A	Reference B	Quotient
+	+	+
+	–	–
–	+	–
–	–	+

Floating Point Division will not normally output power flow, except under the following conditions.

1. The result is too big to represent (overflow).
2. The result is too small to represent (underflow).
3. Reference B is a zero.
4. Both references A and B are infinities.
5. One or both of references A or B is not a number (invalid format).

Artisan Technology Group - Quality Instrumentation ... Guaranteed | (888) 88-SOURCE | www.artisantg.com

Floating Point Greater Than

Program a Floating Point Greater Than function to compare the value in reference A to the value in reference B.

Every scan that power is received, the Greater Than function compares the content of reference A to the content of reference B. Comparison is based on the signed, floating point values of the contents.

Power flows only if the first value is greater than the second. Some example comparisons are shown below.

Reference A	Reference B	Power Flow ?
+2.34595+1	+2.34595+0	YES
+2.34595-I	+2.34595+1	NO
+0.00000+0	+9.99999-I	YES
+0.00000+0	+100000-1	YES
+0.00000+0	-1 .00000+1	NO

Convert Integer To Floating Point

Every scan that power is received, the integer to Floating Point function reads the integer value of reference A and places the floating point equivalent in reference B.

Power flows only when an error is encountered.

Convert Floating Point To Integer

Every scan that power is received, the Floating Point to Integer function reads the floating point value of reference A, and places the integer equivalent in reference 8.

Power flows only when an error is encountered.

WINDOW (DPREQ) FUNCTION

The Window Function is a special Data Processor REQuest that supports the 16 channels of the expanded I/O system. Each scan that power is received, the Window function opens a window to the expanded I/O channel that is specified by the hexadecimal value stored in the upper byte of the first reference.

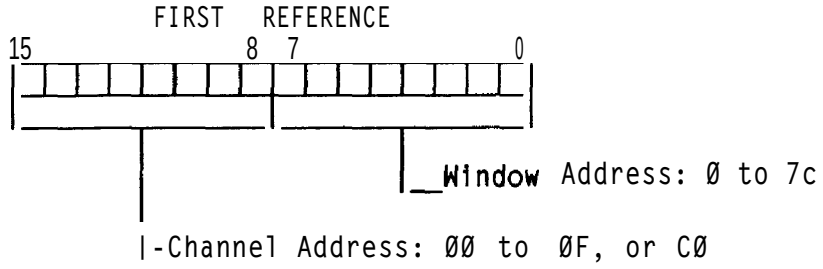

Artisan Technology Group - Quality Instrumentation ... Guaranteed | (888) 88-SOURCE | www.artisantg.com

The first reference used by the Window function stores:

In the high order byte, the number in hexadecimal, of the I/O channel to be opened. The number may be either:

00-0F: valid individual channel numbers as determined by the DIP switch settings on the I/O Transmitter modules in the system.

CO: broadcast channel number.

In the low-order byte, the window address which is the module's card address as set by the DIP switches on the rack backplane. It may be any address from 0 to 7C. 7D, 7E and 7F are reserved for the Interrupt Input module, DPU and PDT windows, and can not be used in this function.

The second reference is the start of the communications block in register memory.

Power flows out of the Window function only if the window address specified in the first reference is out of range of the configured expanded address, or if the window fails. Failure may be caused by:

Addressed device not responding (timeout).
Addressed device sends bad header (checksum).
Addressed device fails to close window (timeout).

Entering a Window Function

The Window function can be placed in columns 1 to 9 of a rung.

1. Enter any logic required to control power flow to the function. If the function is placed at the left rail, it will execute unconditionally upon every sweep.

2. Select Advanced Mnemonic Group (F7), then Control Functions (F6), then Window (F7). The DPREQ Window display appears.

```
              *******              R*****
 +[ WINDOW  ADDRESS        COMM BLOCK ]+
```

3. The cursor is at ADDRESS. Using the decimal keypad, type in number of the reference. It may be any reference type. After entering the reference, press the Enter key.

4. The cursor moves to BLOCK. Enter the register that will store the communications block or computer mail box address. It must be a valid register. Press the Enter key.

5. Complete the logic for the rung, then press the Accept key. The Edit key functions reappear at the bottom of the screen.

Artisan Technology Group - Quality Instrumentation ... Guaranteed | (888) 88-SOURCE | www.artisantg.com

USING THE DO I/O FUNCTION TO ADDRESS 16K INPUTS AND OUTPUTS

The DO I/O function as programmed with the Advanced Functions required entering a start and end address for I/O points on the Main or Auxiliary chain to be serviced immediately. The DO I/O function for use with the Expanded I/O has been expanded to address the full 16K inputs and 16K outputs of the expanded I/O references. When expanded I/O is selected, the bits in the Do I/O function references have the meanings shown below. These can be placed in the start and end references using an A to B Move or similar function.

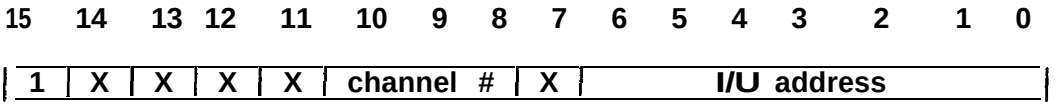

Bit 15 must be set to 1 by the program.
If a constant value is used, bits 14 and 15 must both be set to 1.
Bits 8, 9, and 10 are the channel number, 0 – 7.
Bits 0 through 6 specify the I/O address.

Entering a Do I/O Function

The Do I/O function can be placed in columns 1 to 7 of a rung.

1. Enter any logic required to control power flow to the function. If the function is placed at the left rail, it will execute unconditionally upon every sweep.

2. Select Advanced Mnemonic Group (F7), then Control Functions (F6), then Do I/O (F4). The Do I/O display appears.

```
+[ DO I/O START      END ]+
```

3. The cursor is at START, Using the decimal keypad, type in the reference that contains the beginning I/O address. It may be a constant from 1 to 1000, any valid register, or any I/O reference in the range 1-1024. After entering the reference, press the Enter key.

4. The cursor moves to END. Using the same parameters, enter the reference that contains the final address. Press the Enter key.

5. Complete the logic for the rung, then press the Accept key. The Edit key functions reappear at the bottom of the screen.

When the DO I/O function is executed, through user logic, the I/O points specified by START and END will be serviced immediately. When active, bit 15 (or 14 and 15) must have been set to a 1 and the starting channel and address must be equal to or less than the ending channel and address, in order for power flow to be passed through the function. If either of these conditions are not met, the function will not pass power flow.

Artisan Technology Group - Quality Instrumentation ... Guaranteed | (888) 88-SOURCE | www.artisantg.com

EXPANDED TIME REFERENCE (REAL-TIME CLOCK)

This is a three-word real-time clock maintained by the CPU in three consecutive registers. The exact register address is determined by the total register size in the CPU. The clock is located in the following registers:

MAXIMUM REGISTERS IN SYSTEM	CLOCK LOCATION
1K	R0267, R0268, R0269
8K	R4117, R4118, R4119
16K	R4117, R4118, R4119

The function of the clock is to record elapsed time and maintain an accurate record of the time that Genius I/O faults occur.

Format of the Real-Time Clock

The clock keeps track of time in hundreds of days, days, hours, minutes, seconds and tenths of seconds. Each fault is time stamped with the clock reference and stored in the Genius I/O Fault Table if it is enabled. The clock stops when power is removed and must be reset by the user when power is restored. The clock can be synchronized by the user through logic programming. The clock is updated once per sweep and has a cumulative accuracy of 8 seconds per day.

The format for storing the clock data in the three registers is as shown below. Data entered in each byte of each register is 2 BCD digits.

REGISTER	MOST SIGNIFICANT BYTE	LEAST SIGNIFICANT BYTE
RXXXX	Seconds (00 - 59)	Tenth of Seconds (00 - 09)
RXXXX+1	Hours (00 - 23)	Minutes (00 - 59)
RXXXX +2	Hundreds of Days (00 - 99)	Days (00 - 99)

Artisan Technology Group - Quality Instrumentation ... Guaranteed | (888) 88-SOURCE | www.artisantg.com

GENIUS I/O DIAGNOSTICS

The Genius I/O diagnostics must be enabled from the Configuration Menu in order to be fully utilized by the CPU. The diagnostic features which can be enabled are: Diagnostic Tables, Bus Controller Point Faults, Diagnostic range Limit, Fault Table Length, and Bus Status/Control Byte Location. Enabling of these features was previously described in the discussion on the Configuration Menu. The following discussion describes the diagnostics and the interface between the CPU, Bus Controller and the Genius I/O Blocks.

DIAGNOSTIC FAULT TABLE

The first function is a diagnostic fault table which automatically stores any fault reported by a Bus Controller, along with the time that the CPU received the fault. Ten registers are used to store data related to each fault. The fault table can be as long as desired, limited only by the quantity of registers available in the CPU. The location and maximum length of the fault tables can be determined by referencing the memory maps for 1 K, 8K and 16K registers (figures 4.3, 4.4).

REGISTER MEMORY SIZE VS GENIUS I/O DIAGNOSTICS

The register memory size specified by the entry in the Configuration Menu tells the CPU the amount of Genius I/O diagnostics to perform. Care should be exercised by the user when specifying register sizes in order to ensure upward compatibility. For a register size of 1K, diagnostics will be performed up to the first 1024 inputs and 1024 outputs. Maximum register sizes of 8K or 16K will allow the CPU to perform diagnostics on the maximum of 16K inputs and 16K outputs. References other than those specified for diagnostics are available for general use by the user.

Fault Table Pointer

A counter located at the top of the fault table (first register in the table) is a pointer that indicates how many faults have been stored in the table. When the table is full, no additional entries are allowed until the counter is cleared or reduced in content by the user's program, thus indicating that space is available for new entries. The actual content of the table is not cleared to zero. The pointer returns to the first register and the next data is loaded into the pointer location. Any new data written to a register writes over the old data. New data is loaded into the next available location, with the oldest data at the top. The fault table length is specified in multiples of ten registers. For example, a length of 27 indicates 271 registers assigned to the fault table. Each fault recorded is represented by 10 words (registers).

Input Data From Bus Controller

Each Bus Controller with diagnostics uses 6 bytes to provide status information to the CPU. The content of each of the bytes is described following figure 4.6. Bus Controllers without diagnostics use only one Byte in the input table to provide status information.

Artisan Technology Group - Quality Instrumentation ... Guaranteed | (888) 88-SOURCE | www.artisantg.com

Selecting Addresses for Diagnostic Data Storage

The starting address for diagnostic input data provided to the CPU from a Bus Controller and command output data received from the CPU is established by setting the DIP switch at the back of the I/O slot into which the Bus Controller is inserted. The Bus Controller with diagnostics uses six input bytes (48 input status references) and four output bytes (32 output status references) to store its diagnostic data. The Bus Controller without diagnostics uses only one input byte (8 input status references).

Only diagnostic and status information is provided through these status references. I/O states are controlled by their normal I/O references. To select the starting I/O status reference, the DIP switch segments must be set before inserting the Bus Controller module in its selected slot. If diagnostic data is to be time stamped and stored in a fault table, each Bus Controller must be placed on even multiples of 8 I/O byte addresses (64 I/O references) as shown in table 4.4. These addresses must correspond to the addresses configured on the Bus Controller map. The diagnostics will not function if this address guideline is not followed. The 2 bytes (16 bits) not used by the diagnostics are available for general I/O use.

Table 4.4 BUS CONTROLLER ADDRESSES FOR DIAGNOSTIC STORAGE

I/O	DIP SWITCH POSITION							WITH DIAGNOSTICS	
ADDRESS	7	6	5	4	3	2	1	INPUTS (48)	OUTPUTS (32)
0								0001 - 0048	0001 - 0032
8				•	A			0065 - 0112	0065 - 0096
16			•		L			0129 - 0176	0129 - 0160
24			•	•	W			0193 - 0240	0193 - 0224
32		•			A			0257 - 0304	0257 - 0288
40		•		•	Y			0321 - 0368	0321 - 0352
48			•	•	S			0385 - 0432	0385 - 0416
56		•	•	•				0449 - 0496	0449 - 0480
64	•				C			0513 - 0560	0513 - 0544
72	•			•	L			0577 - 0624	0577 - 0608
80	•		•		O			0641 - 0688	0641 - 0672
88	•		•	•	S			0705 - 0752	0705 - 0736
96	•	•			E			0769 - 0816	0769 - 0800
104	•	•		•	D			0833 - 0880	0833 - 0864
112	•	•	•					0897 - 0944	0897 - 0928

Positions 1, 2, and 3 must always be depressed to the right (CLOSED). Those positions indicated by • must be depressed to the left (OPEN).

Bus Controller Status Byte 1 (Address 0) - Input 1

BUS CONTROLLER OK - This input is set on within one second of power-up if the Bus Controller passes a power-up self test. The input is updated by the Bus Controller every scan to verify proper operation of the Bus Controller. The user should turn this input off using a Bit Clear instruction at the end of every CPU scan. If power is removed from the I/O rack containing the Bus Controller, this input may remain in the ON state. The user program can set the input off and verify that for every scan, the Bus Controller is actively providing an ON state.

Artisan Technology Group - Quality Instrumentation ... Guaranteed | (888) 88-SOURCE | www.artisantg.com

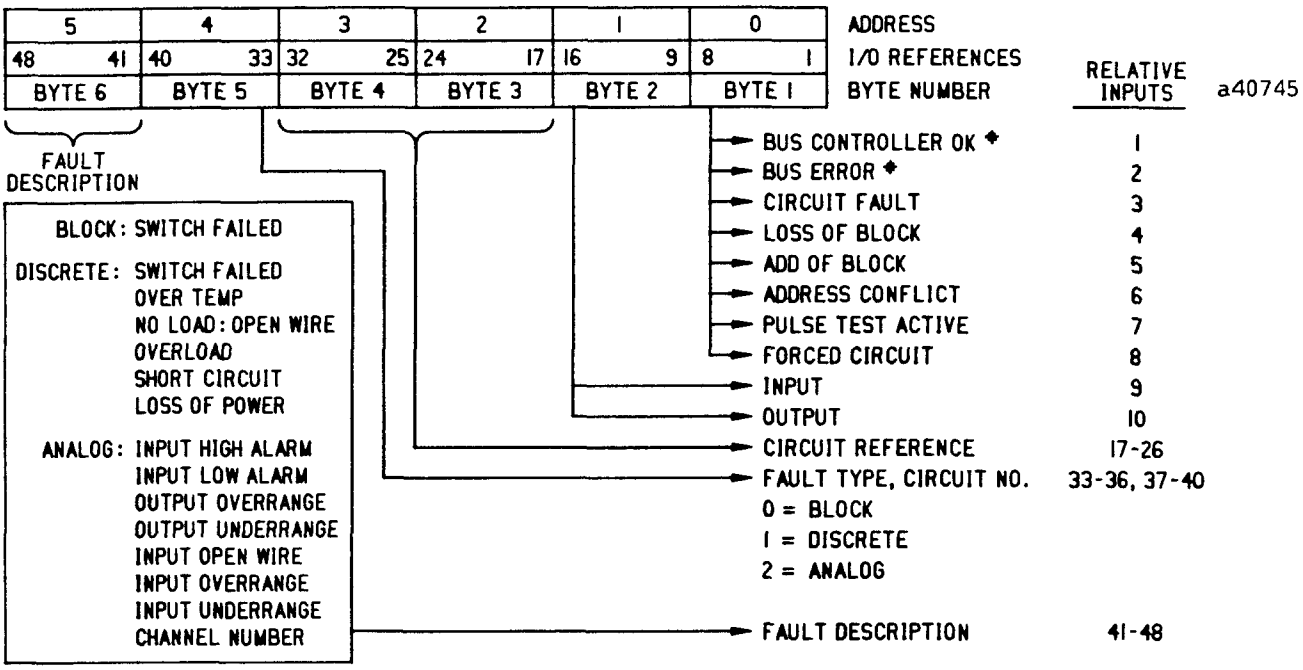

*Available when using Bus Controller without diagnostics.

Figure 4.6 BUS CONTROLLER INPUT STATUS REFERENCE DEFINITION

Bus Controller Status Byte 1 (Address 0) - Input 2

BUS ERROR - This input reference is an indication of serious bus errors detected by the Bus Controller. The input is normally in the OFF state. It is set On by the following two conditions:

1. If the Bus Controller receives ten or more messages with incorrect CRC codes within a 10 second period, the input will be set ON for one CPU scan If more than ten errors are received in the next 10 second period, the input will again turn ON. If this input continues turning ON for one scan every 10 seconds, it is an indication of excessive CRC errors coming from a device on that bus.

2. If the Bus Controller does not get its turn on the bus at least once every 100 ms, this input stays ON for at least one scan. It turns OFF only after the Bus Controller has been able to transmit data twice within 100 ms. If Input 2 stays On for several scans or longer, it is an indication that the Bus Controller cannot gain access to the bus because of a duplicate block number assignment or that a bus scan is greater than 100 ms.

Bus Controller Status Byte 1 (Address 0) - Inputs 3, 4, 5, 6

These inputs are indications of faults detected by the Bus Controller. A fault indication is active for one scan. These inputs are reset to the OFF state upon power-up of the CPU or the Bus Controller. Only one of these four inputs will be on during any scan.

Artisan Technology Group - Quality Instrumentation ... Guaranteed | (888) 88-SOURCE | www.artisantg.com

Bus Controller Status Byte 1 (Address 0) - Input 3

CIRCUIT FAULT – This input, when on, indicates a fault in one of the circuits on a Genius I/O block. Bytes 3 and 4 of the 6 input bytes indicate the I/O reference (0001 through 1000) that has been assigned to the circuit.

- **Byte 2 (inputs 9 and IO) indicate whether the circuit is an input or output. Input 9 ON indicates that the circuit is an input, Input 10 ON indicates that the circuit is an output. If both are On, the circuit is an output with feedback.**

- **Byte 3 contains the least significant byte of the I/O reference (Input 17 contains the least significant bit, LSB).**

- **Byte 4 contains the most significant byte of the I/O reference (Input 26 contains the most significant bit, MSB).**

- **Byte 5 indicates the fault type and the relative circuit reference number of the fault on the I/O block. Inputs 33 – 36 (with 33 the LSB) can display the value 0 through 15; however, only 0, 1, and 2 are used. The value 0 indicates a fault with the EEPROM in the block's terminal assembly. The value 1 indicates that the circuit fault is on a discrete I/O block and the value 2 indicates that the circuit fault is on an analog I/O block.**

Inputs 37 through 40 indicate the relative circuit number on this I/O block. The value 0 represents the top circuit of the block; 7 or 15 the bottom circuit for discrete blocks and 5 the bottom circuit on analog blocks). On the analog blocks, the values 0 to 3 indicate input channels 1 to 4; 4 and 5 represent output channels 1 and 2.

- **Byte 6 (Inputs 41 through 48) are individual bits that indicate the type of fault. Only one of these bits will be on at a time.**

Table 4.5 defines the faults represented by the inputs 41 through 48. Notice that they are decoded differently for discrete and analog blocks, as indicated by the fault type in Byte 5 (inputs 33 – 36).

Table 4.5 DECODING OF BYTE 6 FOR CIRCUIT FAULT TYPES

RELATIVE INPUT NUMBER *	SIGNIFICANCE IF ON	
	DISCRETE I/O BLOCK	ANALOG I/O BLOCK
41	Loss of Circuit Power	Low Alarm
42	Output: Short Circuit	High Alarm
43	Output: Overload	Input Underrange
44	If Input: Open Wire If Output: No Load	Input Overrange
45	Over Temperature	Open Wire
46	Failed Switch	Output Underrange
47	not used	Output Overrange
48	not used	not used

*** Adjust as necessary for different Bus Controller I/O reference assignments.**

Artisan Technology Group - Quality Instrumentation ... Guaranteed | (888) 88-SOURCE | www.artisantg.com

Bus Controller Status Byte 1 (Address 0) – Input 4

LOSS OF BLOCK – This input, when ON, indicates that the Bus Controller has detected the loss of an I/O block that had been operating.

Bus Controller Status Byte 1 (Address 0) – Input 5

ADD A BLOCK – This input, when ON, indicates that the Bus Controller has detected that a block has been added to the bus where there had previously not been a block.

Both input 4 and 5 will be on for at least one CPU scan for each detected loss or addition of a block, but they will never be on at the same time.

- **Byte 2 (Inputs 9 and 10) indicates whether this I/O block is an input only block (Input 9 ON), output only I/O block (Input 10 ON), or combination input/output I/O block (Inputs 9 and 10 both ON).**

- **Bytes 3 and 4 indicate the starting reference (0001 to 0993) assigned to this I/O block.**

- **Bytes 5 and 6 contain the number of input and output addresses, respectively, used by the I/O block.**

Bus Controller Status Byte 1 (Address 0) – Input 6

ADDRESS CONFLICT – This input indicates a conflict between two I/O blocks on the bus trying to use the same I/O reference. A block has been added with a reference used by a block already on the bus. This conflict may be for two blocks with references overlapping either partially or totally. Input 16 will be On for one scan for each conflict to be reported. The last block with the conflicting address will be ignored.

- **Byte 2 (Inputs 9 and IO) indicates whether this I/O block is an input only block (Input 9 ON), output only I/O block (Input 10 ON), or combination input/output I/O block (Inputs 9 and 10 both ON).**

- **Bytes 3 and 4 indicate the reference (0001 to 0993) of the lowest reference involved in this conflict.**

- **Bytes 5 and 6 provide the device numbers (0 to 31) of the two conflicting I/O blocks.**

  Byte 5 (Input 33 = LSB, Input 37 = MSB) contains the device number for the I/O block that was not accepted. This I/O block is rejected by the system (no inputs accepted/no outputs activated) and is left in a default state.

  Byte 6 (Input 41 = LSB, Input 45 = MSB) contains the device number for the existing I/O block.

Bus Controller Status Byte 1 (Address 0) – Inputs 7 and 8

These two inputs provide data independent of the other inputs. They can be turned on as needed for indication of system status regardless of the ON and OFF state of the other inputs.

Artisan Technology Group - Quality Instrumentation ... Guaranteed | (888) 88-SOURCE | www.artisantg.com

Input 7 , PULSE TEST ACTIVE – This input is turned on for one scan after the Pulse Test is commanded by the CPU and remains on until all discrete I/O blocks configured for the Pulse Test have completed the test. Faults detected during this test are provided to the CPU through Input 3, Circuit Fault, which is described above. This allows circuit faults to be identified as normal random actions or as faults identified as part of a pulse test.

Input 8, FORCED CIRCUIT – This input is on any time that at least one discrete I/O circuit or Analog circuit is forced by the Genius I/O Hand Held Monitor (HHM). This input can be used by the CPU to alert operators that a forced condition exists. The operator can then determine if the forced condition is proper or should be removed, if necessary, with the HHM. There is no indication as to which I/O block or reference contains the forced reference. Only forced conditions set by the HHM on blocks controlled by this Bus Controller affect input 8.

NOTE

When analyzing the data provided by the 48 input references, first examine the lower 8 inputs of the reference (first byte). Input data in higher bytes (2 through 6) is used only if one of the Inputs 3 to 6 is ON. Inputs 1, 2, 7, and 8 are independent and can come ON or go OFF as required, regardless of the state of the other inputs. *If Input 1 is OFF, all other inputs have no validity.*

Fault Table Registers

The content of each of the registers is further described below. The bits are numbered from 0 through 15. Bits 0 through 7 are the Least Significant Byte and bits 8 through 15 are the Most Significant Byte.

Register 1 – Genius I/O Bus Controller Address Decoding

The first register contains the I/O address of the Bus Controller that reported the fault. The Bus Controller address is decoded by the state of the bits in this register. The register contains the I/O channel (bits 12 -15, range 0 through F) in which the Bus Controller is placed and its starting I/O reference (bits 0 – 9, with a range of 0 through 1023). Bits 10 and 11 are unused.

Register 2

The second register contains the I/O channel number in Hexadecimal (0-F) and the I/O reference of the faulty circuit or starting reference of the faulty I/O block. If the fault is with the Bus Controller or the Genius I/O communication bus, the reference value will be 0. Bits 10 and 11 in register 2 indicate whether the circuit fault is with an input (bit 10 on) or output (bit 11 on) circuit, or I/O blocks containing all inputs or outputs. If bits 10 and 11 are on, the circuit is an output with feedback or an I/O mixed block.

Artisan Technology Group - Quality Instrumentation ... Guaranteed | (888) 88-SOURCE | www.artisantg.com

Figure 4.7 illustrates a fault table, showing the content of each of the 10 registers.

Register 1	LS BYTE	Bus Controller Address, I/O Address
	MS BYTE	Bus Controller Address, Channel
Register 2	LS BYTE	Block Address, I/O Address
	MS BYTE	Block Address, Channel and I or O
Register 3	LS BYTE	Circuit/Channel Number
	MS BYTE	Bus Controller Status Byte No. 3
Register 4	LS BYTE	Bus Controller Status Byte No. 4
	MS BYTE	Bus Controller Status Byte No. 5
Register 5	LS BYTE	Bus Controller Status Byte No. 6
	MS BYTE	Fault Type
Register 6	LS BYTE	Fault Type
	MS BYTE	Fault Description
Register 7	LS BYTE	Fault Description
	MS BYTE	Fault Description
Register 8	LS BYTE	Fault Time - Tenths of Seconds
	MS BYTE	Fault Time - Seconds
Register 9	LS BYTE	Fault Time - Minutes
	MS BYTE	Fault Time - Hours
Register 10	LS BYTE	Fault Time - Days
	MS BYTE	Fault Time - Hundreds of Days

Figure 4.7 FAULT TABLE REGISTERS

Register 3

The high byte of register 3 contains Bus Controller status byte 3. This byte contains the relative circuit number of the faulty circuit on the I/O block, with zero the top circuit (lowest reference) and 7 or 15 the bottom circuit. If the fault is not a circuit fault, this value will be zero.

Registers 4 and 5

Register 4 contains Bus Controller status bytes 4 and 5. The low bye of register 5 contains Bus Controller status byte 6. Registers 4 and 5 copy the Bus Controller status from input bytes 4, 5, and 6 (refer to figure 4.7). The Bus Controller with diagnostics uses six consecutive input addresses, with the starting address selected by the user by configuring the DIP switch at the rear of the I/O slot containing the Bus Controller.

Artisan Technology Group - Quality Instrumentation ... Guaranteed | (888) 88-SOURCE | www.artisantg.com

Register 5 (Upper Byte) and Register 6

Register 5 (Upper byte) and register 6 contain a specific indication of the fault type, copied from input byte 1, which is defined as shown in table 4.6.

Table 4.6 FAULT TYPE DEFINITIONS

BIT NUMBER			DEFINITION
Upper Byte of Fault Register 5	8		Bus Controller Fault (Not OK)
	9		Error on Genius Communication Bus
	10		Individual Circuit Fault
	11		Loss of I/O Block
	12		Addition of I/O Block
	13		Conflict in I/O Reference
	14		EEPROM Failure
	15		Not Used (Set to 0)
		Bit Pattern	
Low Byte of Fault Register 6	3 - 0	0001	Discrete I/O Block
		0010	Analog I/O Block
		All other patterns	Future Use
	7 - 4		Unused (Set to 0)
			If Discrete I/O Circuit Fault
Upper Byte of Fault Register 6	8		Loss of Power
	9		Short Circuit
	10		Overload
	11		No Load (Output),Open Line (Input)
	12		Overtemperature
	13		Switch Failed
	14		Undefined
	15		Undefined

NOTE

Only one bit from bit numbers 8 - 15 (register 5) will be on and possibly one will be on from bit numbers 0 - 7 (register 6), depending upon fault type.

Register 7

Only bits 0 and 1 are used in register 7. Bit 0 is on if the fault is with a discrete I/O circuit and bit 1 is on if the fault is with an analog circuit. If register 7 contains a zero, the fault is with non-circuit hardware (Bus Controller or Genius communications). The upper byte of register 7 is always set to 0.

Artisan Technology Group - Quality Instrumentation ... Guaranteed | (888) 88-SOURCE | www.artisantg.com

Registers 8, 9, 10

The final three registers contain the time to the nearest 100 ms at which the fault was received from the Bus Controller. When a fault occurs, the fault is "time stamped" or recorded in these three registers. The CPU keeps a master clock stored in its registers to record this time. In case of power failure, the clock stops and retains its previous value. Upon restoration of operation, it starts from where it left off. The user's program is responsible for restoring the clock to the current time. The clock is updated whether or not the scan is operating (Run or Stop mode) but does not continue upon power failure.

BUS CONTROLLER OUTPUT DATA

A Bus Controller with diagnostics also accepts output data as commands from the CPU. There are four addresses of output data. The output bytes (1 through 4) start at the same address (set by the user) as the input bytes. Bytes 5 and 6, as shown in the illustration, are used by the CPU and should not be referred to by the user. The content of each byte is illustrated in figure 4.8.

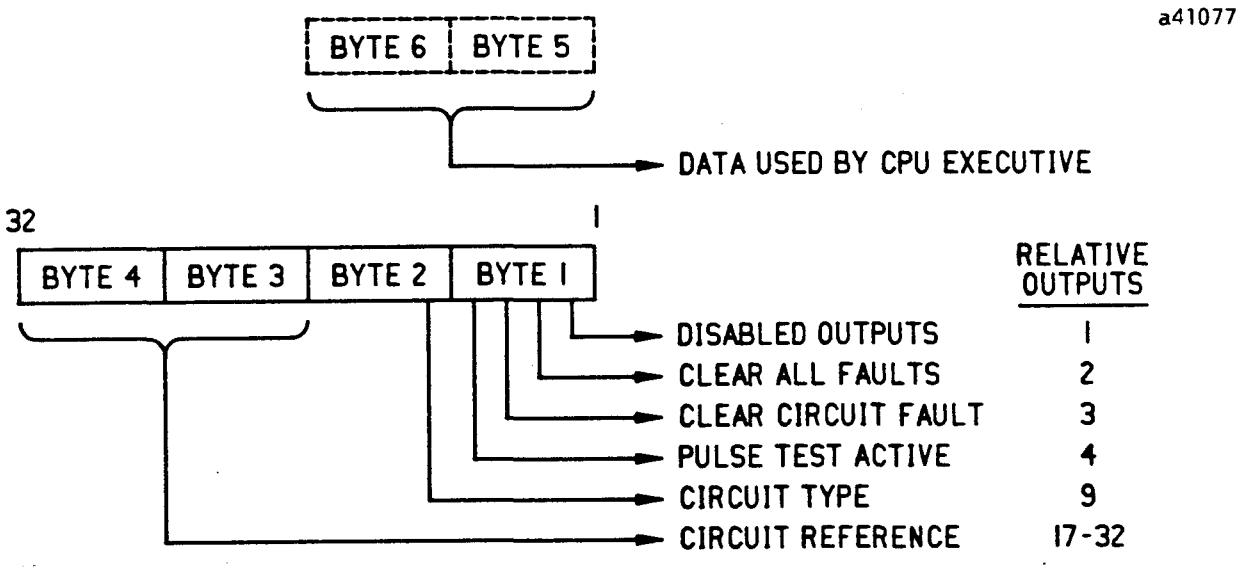

Figure 4.8 BUS CONTROLLER OUTPUT STATUS REFERENCE DEFINITION

Output 1 (Bit 0) Definition, Disabled Outputs

This output stops the Bus Controller from sending output data to the Genius I/O blocks on that bus. When this bit is on, no output data is sent; however, input data is still received from the blocks. The I/O blocks hold the current state (discrete) or value (analog) for up to 500 ms. After this output has been on for 500 ms, the blocks assume that the communications bus has failed and go to their configured state or value (either hold last state or default to a specific state or value). When bit 0 is off, the outputs will again receive data and the I/O block will drive the new state or value as new communications are received from the CPU.

Artisan Technology Group - Quality Instrumentation ... Guaranteed | (888) 88-SOURCE | www.artisantg.com

Output 2 (Bit 1) Definition, Clear All Faults

This bit clears all faults that are currently being stored in the I/O blocks connected on this controllers bus. All faults will be cleared once for each transition of the Clear All Faults output.

Output 3 (Bit 2) Definition, Clear Circuit Fault

Output 3 performs a function similar to Output 2, except it is limited to one circuit per scan. Only the circuit identified in addresses 2 and 3 (bytes 3 and 4) by the I/O reference 1 to 1000 (input 17 = LSB, input 32 = MSB) will be cleared at the I/O block. No other faults will be affected.

Since the analog circuits do not have a specific I/O reference assigned to them, the circuits are identified by the first six references assigned to the block as shown in table 4.7. The example in the table assumes that the Analog I/O block starts at I/O references 10225.

Table 4.7 ANALOG I/O BLOCK REFERENCE EXAMPLE

I/O REFERENCE	ANALOG CIRCUIT	EXAMPLE
Starting Reference	Input Circuit 1	Ø225
Starting Reference +1	Input Circuit 2	Ø226
Starting Reference +2	Input Circuit 3	Ø227
Starting Reference +3	Input Circuit 4	Ø228
Starting Reference +4	Output Circuit 1	Ø229
Starting Reference +5	Output Circuit 2	Ø23Ø

To clear more than one circuit (either discrete or analog) Output 3 must go from an off to on transition (a one-shot could be used for this) and change the values in Bytes 3 and 4 to reflect the actual individual circuits to be cleared.

Output 4 (Bit 3) Definition, Pulse Test

This output activates the pulse test. If this output is on for one scan, it will cause all discrete I/O blocks connected to this bus to conduct a pulse test of their outputs. Outputs configured to ignore this signal, input only blocks and analog I/O blocks will not perform the pulse test.

The pulse test begins at device number 0 and as fast as it receives a test complete signal from that device, proceeds to each block until it reaches device number 31. Faults detected during this test are recorded by the CPU as circuit faults. When the test has been completed by all I/O blocks on the bus, Input 7 (Pulse Test Active) wi l l be turned off .

Artisan Technology Group - Quality Instrumentation ... Guaranteed | (888) 88-SOURCE | www.artisantg.com

If this output is on when one test is completed, another will immediately begin. It is not recommended that this output be left on for a continuous pulse test. It is recommended that the pulse test be activated a minimum of once each 5 minutes. Input 7 will then toggle as each pulse test is completed. The advantage of turning output 4 on for only one scan is that only one test will be conducted as timed by input 7.

Output 9 (Bit 0 of Byte 2) Definition, Circuit Type

The state of this output is determined by the Circuit type (either Input or Output). If the Circuit Reference indicated by the values in bytes 3 and 4 is an Input, this bit is set to a 1. If the Circuit Reference is an output, the bit is set to a 0.

POINT STATUS BIT MAP

Another Genius I/O diagnostic option selected when the Diagnostic Tables are enabled through the Configuration Menu, is a point status bit map for each input and each output. The status bit initial value will be zero. It is set to a one if a fault is received, which affects this circuit or its entire I/O block (that is - loss of block).

Once set, status bits remain on until reset by the user's program, even if the fault is corrected, thus allowing a Matrix Compare function to monitor the status of all I/O circuits, and identify a faulty circuit quickly and without extensive logic.

If faults are found with analog blocks, they will be indicated in the status by a special pattern since there is no direct relationship between the fault circuit and an individual I/O reference. The status for analog inputs is shown below for its three I/O addresses (24 bits).

Table 4.8 BIT STATUS MEANING FOR ANALOG BLOCKS

BIT NUMBER	ADDRESS 0	ADDRESS 1	ADDRESS 2
0	Input 1 Low Alarm	Input 2 Underrange	Input 3 Open Wire
1	Input 1 High Alarm	Input 2 Overrange	Not Used (OFF)
2	Input 1 Underrange	Input 2 Open Wire	Input 4 Low Alarm
3	Input 1 Overrange	Not Used(OFF)	Input 4 High Alarm
4	Input 1 Open Wire	Input 3 Low Alarm	Input 4 Underrange
5	Not Used (OFF)	Input 3 High Alarm	Input 4 Overrange
6	Input 2 Low Alarm	Input 3 Underrange	Input 4 Open Wire
7	Input 2 High Alarm	Input 3 Overrange	Not Used

Artisan Technology Group - Quality Instrumentation ... Guaranteed | (888) 88-SOURCE | www.artisantg.com

BUS STATUS/CONTROL BYTE LOCATION

Some of the bits in the main I/O status table can be used to enable and monitor some of the Genius I/O functions. This is the main I/O point address where the diagnostics' discrete status (input table) and control (output table) bytes are located. The range of allowable entries is 0001 through 1017.

The user can select an I/O reference that establishes eight input references and eight output references on an even byte boundary. The even byte boundary is required so that when divided by eight, the remainder is exactly one. The one input and one output byte reference provides data relative to the entire CPU system and its operation with Genius I/O functions. Table 4.9 lists the status information in these references. Reference 0521 is used as an example for the start location.

Table 4.9 BUS CONTROLLER STATUS/CONTROL BYTE DEFINITION

RELATIVE REFERENCE NUMBER	INPUT ON IF: REF	SIGNIFICANCE	OUTPUT ON IF: REF	SIGNIFICANCE
1	I0521	Diagnostics enabled	O0521	Master reset
2	I0522	Fault detected this scan	O0522	Conduct pulse Test
3	I0523	Expanded I/O enabled	O0523	Future
4	I0524	Fault table overflowed	O0524	Future
5	I0525	Future	O0525	Future
6	I0526	Future	O0526	Future
7	I0527	Future	O0527	Future
8	I0528	Future	O0528	Future

Input Status Definitions

The first input is on if the user has configured the CPU to enable the special diagnostic functions. The second input is on if the CPU has detected any fault during its evaluation of each Bus Controller's input data. The third input is on if the expanded I/O is enabled (i.e., all I/O serviced from register content). The fourth input is on if the fault table is full and an additional fault is received but could not be stored. The most recent fault is disregarded. These inputs are updated with each scan, until reset by user logic (unless controlled by a one-shot).

Artisan Technology Group - Quality Instrumentation ... Guaranteed | (888) 88-SOURCE | www.artisantg.com

Output Control Definitions

On the output side, when the first output is set on, all Bus Controllers connected to the CPU will begin to clear faults stored at the I/O blocks as well as in the Bus Controller. When this master reset is removed, new faults can be recorded and reported to the CPU. The second output causes a bit to be set which initiates a pulse test of all Genius I/O discrete outputs connected to the CPU, except those blocks configured to ignore the test. If left energized, the second output will cause continuous pulse tests to be conducted as soon as the previous test is completed.

COMPUTER MAIL BOX

The Computer Mail Box is an automatic communications window to the Genius I/O system. The default entry for this option is N. To use the Computer Mail Box, change this entry to Y. If set to Y, the CPU will open a communications window to any valid address located in the first of 70 consecutive registers for the Computer Mail Box. The window is opened once per sweep, when the CPU is in the RUN mode.

Using the Computer Mail Box to Communicate with Genius I/O Bus Controllers

The CPU interprets data in the first of 70 consecutive registers as an address to open communications with a Genius Bus Controller. The registers in the CPU that are allocated for the Computer Mail Box are used for transfer of data between Genius I/O Bus Controllers and a Series Six Plus CPU in the Expanded mode. The window address of the Bus Controller is placed in the first register and command data is placed in the next five registers. The remaining 64 registers provide a buffer area for data to be communicated. An illustration of the registers and their content is shown below.

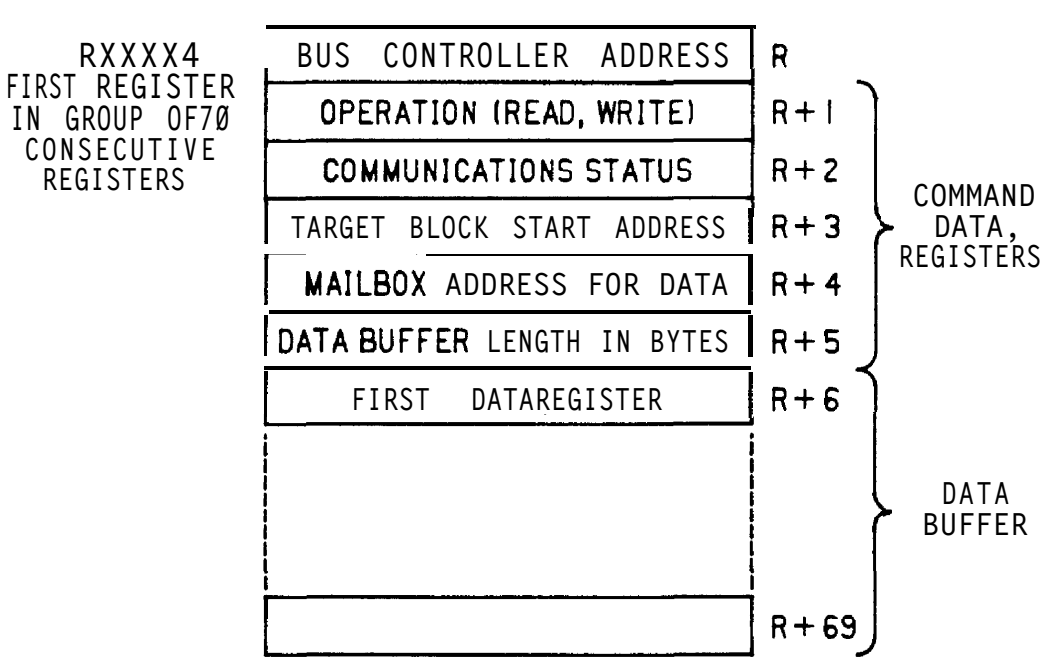

Figure 4.9 REGISTER FORMAT FOR COMPUTER MAIL BOX

Artisan Technology Group - Quality Instrumentation ... Guaranteed | (888) 88-SOURCE | www.artisantg.com

The CPU, at the end of its sweep, detects that a command is waiting and opens an executive window for communications. The addressed device can then either read data from the mail box or place data for the CPU in the mail box. The window that allows a Bus Controller to access the Computer Mail Box is generated automatically by the CPU at the end of each sweep if commanded to do so by enabling the Computer Mail Box option through the CPU Configuration Set Up menu.

NOTE

The following description of the mechanism for operation of the Computer Mail Box is for use only with Genius I/O Bus Controllers.

Operation of the Computer Mail Box

The sequence outlined below describes the operation of the Computer Mail Box and the content of each of the 70 registers is.

Communications Window Opens

The window to the referenced Bus Controller (channel 0 to F, address 1 to 1000) is opened at the end of each CPU sweep if:

1. The Computer Mail Box has been enabled through the CPU Configuration Set Up Menu using Logicmaster 6 software in a Workmaster computer.

2. If the content of the window address register in the CPU is in the range of 00001 to 16360.

Register R - Bus Controller Address

The Computer Mail Box address of the Bus Controller to be communicated with is placed in the first of the group of 70 registers. The actual address to be entered into this register is calculated by using the following formula:

Mail Box Window address = Channel number (0 to F) x 1024 + I/O address (1 to 993) of the Bus Controller. Use the decimal equivalent of the channel number. For channels A to F, use the decimal equivalent (A = 10, B = 11, etc.) of the hexadecimal value in your calculation.

Example: Bus controller at I/O location 257 in channel 4 (4 x 1024 + 257 = 4353). Enter 4353 in the first register of the Computer Mail Box.

Artisan Technology Group - Quality Instrumentation ... Guaranteed | (888) 88-SOURCE | www.artisantg.com

Command Data Registers

The next 5 registers contain command data. This data, which is in the form of numerical values, provides control information, which includes:

- What function is performed.
- Which specific I/O block, if any, is involved.
- How much data is to be communicated.
- Where the data is to be sent in the Genius I/O system, or where data from the Genius I/O system is to be stored in the CPU.

The content of each of the five command registers is described below.

Register R+1 - Operation (Read or Write)

The second register must contain an operation (command) number which indicates which of the following operations is to be performed when communications is opened (DPREQ receives power flow).

- 1 = Idle, no operation performed
- 2= Read the configuration of the I/O block or Bus Controller (into CPU registers) specified in the fourth register. Immediate command *.
- 3= Write the configuration of the I/O block specified in the fourth register (from CPU registers). Not an immediate command.
- 4= Read diagnostic data of the I/O block or Bus Controller (into CPU registers). Immediate command *.
- 5= Reserved for future use.
- 6= Reserved for future use.
- 7 = Read analog status (all analog inputs from a block into the CPU registers). Immediate command *.
- 8= Reserved
- 9 = Read Status Table Reference. Immediate command *.
- 10= Reserved

* Immediate only if the specified Status Table address is that of the Bus Controller.

Register R+2 = Communications Status

The third register is loaded with a number by the CPU to indicate the status of the communications (DPREQ). The register should initially be cleared to zero and will be loaded by the CPU at the end of each scan when a status is available. The content of this register as loaded by the CPU can be:

- 0 = Not accepted. The CPU or addressed Bus Controller is busy with the previous communications request (DPREQ).
- 1 = The operation is in process but not completed.
- 2= Operation has been completed successfully.
- 12= The operation has been terminated due to a syntax error in the DPREQ registers.
- 20= Other error. Any errors that are involved in executing the command, such as a communications timeout, NAK, internal Bus Controller error, etc.

Artisan Technology Group - Quality Instrumentation ... Guaranteed | (888) 88-SOURCE | www.artisantg.com

Register R+3 – Target Block Start Address

The content of the fourth register is an I/O reference to indicate the starting location of the desired I/O block or Bus Controller. The register must contain a value between 1 and 993, which must be a valid I/O address. Three devices can be addressed: discrete I/O blocks, analog I/O blocks, and the Bus Controller.

Register R+4 – Mailbox Address for Data

The fifth register indicates where the received data from the Genius I/O system should be stored in the CPU for read operations (operations 2, 4, and 7 in register R+1). Consecutive registers, beginning with the specified register, will be used until all received data is stored. For write operations (operation 3) this register indicates where the data to be sent to the Genius I/O system from the CPU, is to be stored.

Each device requires a different number of registers to store the configuration data in a 16-bit format. An 8-circuit discrete I/O block uses 6 CPU registers, a 16-circuit discrete I/O block uses 10 CPU registers, an analog I/O block uses 42 registers, and the Bus Controller uses 18 registers.

Register R+5 – Data Buffer Length

The sixth register specifies the length of the number of bytes to be read or written to by the Bus Controller in a Read Device or Write Device command.

Data Registers

The remaining registers in the group of 70 registers in the Computer Mail Box may contain the data to be read from or written to the specified Bus Controller and are moved in one command.

Command Verification

The Bus Controller then verifies the command block for valid command syntax and the absence of a command of that type already in execution. If a syntax error does exist, the Bus Controller writes an error code into the status code of the third register of the command block in the CPU. If a command of the same type is already being executed, the Bus Controller will not modify the status code in a subsequent Computer Mail Box window when the busy condition disappears.

If the command number specifies a write command, the Bus Controller must read the specified amount of data from the CPU register memory and store it in the serial bus output queue.

Artisan Technology Group - Quality Instrumentation ... Guaranteed | (888) 88-SOURCE | www.artisantg.com

Terminating Computer Mail Box Communications

The Bus Controller will then close the communications window by issuing a Close Window command, which terminates execution of the Computer Mail Box. The window address of the Bus Controller (in the first register) that was communicated with is cleared when the value placed in the status register (third register) by the CPU is not equal to 1 (any valid number, except 1).

USING THE DPREQ FUNCTION TO COMMUNICATE WITH GENIUS I/O

The CPU can communicate with the Genius I/O system through a window opened during the logic solution of the CPU's sweep. When this window is opened is determined by programming Data Processor Request (DPREQ) functions in the user program with a constant parameter, which is a pointer to a group of registers that contain the command block. The command block contains the Bus Controller's window address (which corresponds to its address defined by the DIP switch setting on the backplane), a command number, and associated operands for the command.

Typical DPREQ Operation

The sequence below describes the operation of a typical DPREQ instruction.

1. The window to the addressed Bus Controller is opened at the beginning of the DPREQ instruction.

2. Any pending data transfers from the Genius I/O serial bus are copied to or from the CPU registers by the Bus Controller. Examples of these transfers are actions such as the Hand Held Monitor reading a CPU register or the Bus Controller completing a previously issued command.

   Any communications or other error resulting from the previous command will be flagged to the user in the status register.

3. The Bus Controller will then read the CPU Scratch Pad memory (address 35 and 36). If bit 7 in location 35 is set to a 1, then the window is interpreted as an executive or Window instruction type. The Bus Controller then uses the lower 14 bits of the two Scratch Pad addresses as a pointer to the command block in the registers.

   If bit 7 of location 35 is reset, the Bus Controller will use the two bytes as a pointer to the DPREQ instruction located in user memory that contains the 16-bit pointer to the command block in register memory.

4. The Bus Controller will then read the registers as described below.

Artisan Technology Group - Quality Instrumentation ... Guaranteed | (888) 88-SOURCE | www.artisantg.com

In the Series Six Plus ladder logic, the DPREQ function references six consecutive registers. Data to be communicated to the Genius I/O system must be placed in these registers before the DPREQ function is executed. This data, in the form of numerical values, provide control information, which includes:

- Which Bus Controller is to be communicated with.
- What function is performed.
- Which specific I/O block, if any, is involved.
- How much data is to be communicated.
- Where the data is to be sent in the Genius I/O system, or where data from the Genius I/O system is to be stored in the CPU.

Contents of First Register

When programming a DPREQ function, the first register referenced indicates which Bus Controller is to be accessed or through which the intended function is to occur. The contents of this register must be equal to the Bus Controller's first status reference plus 1000. For example if the first status reference is 425, and the Bus Controller is in the Main I/O chain, enter the value 1425.

Contents of Second Register

The second register must contain an operation (command) number which indicates which of the following operations is to be performed when the DPREQ receives power flow.

- 1= Idle (no operation performed)
- 2= Read the configuration of the I/O block or Bus Controller (into CPU registers) specified in the fourth register.
- 3= Write the configuration of the I/O block specified in the fourth register (from CPU registers).
- 4= Read diagnostic data of the I/O block or Bus Controller (into CPU registers)
- 5= Reserved for future use.
- 6= Reserved for future use.
- 7= Read analog status (all analog inputs from a block).

Contents of Third Register

The third register is loaded with a number by the CPU to indicate the status of the DPREQ. The register should initially be cleared to zero and will be loaded by the CPU at the end of each scan when a status is available. The content of this register as loaded by the CPU can be:

- 0= Not accepted. The CPU or Bus Controller is busy with the previous DPREQ.
- 1= The operation is in process but not completed.
- 2= Operation has been completed successfully.
- 12= The operation has been terminated due to a syntax error in the DPREQ registers.
- 20= Other error. Any errors that are involved in executing the command, such as a communications timeout, NAK, internal Bus Controller error, etc.

Artisan Technology Group - Quality Instrumentation ... Guaranteed | (888) 88-SOURCE | www.artisantg.com

Contents of Fourth Register

If the second register contains a 2, it will read the configuration of the I/O block or Bus Controller specified in the fourth register. The content of the fourth register is an I/O reference to indicate the starting location of the desired I/O block or Bus Controller. The register must contain a value between 1 and 993, which must be a valid I/O address. Three devices can be addressed: discrete I/O blocks, analog I/O blocks, and the Bus Controller.

Each device requires a different number of registers to store the configuration data in a 16-bit format. An 8-circuit discrete I/O block uses 6 CPU registers, a 16-circuit discrete I/O block uses 10 CPU registers, an analog I/O block uses 42 registers, and the Bus Controller uses 18 registers.

Contents of Fifth Register

The fifth register indicates where the received data from the Genius I/O system should be stored in the CPU for read operations (operations 2, 4, and 7). Consecutive registers, beginning with the specified CPU register, will be used until all received data is stored. For write operations (operation 3) this register indicates where the data to be sent to the Genius I/O system from the CPU, is to be stored.

5. **The Bus Controller then verifies the command block for valid command syntax and the absence of a command of that type already in execution. If a syntax error does exist, the Bus Controller writes an error code into the status code of the third register of the command block in the CPU. If a command of the same type is already being executed, the Bus Controller will not modify the status code in a subsequent DPREQ when the busy condition disappears.**

6. **If the command number specifies a write command, the Bus Controller must read the specified amount of data from the CPU register memory and store it in the serial bus output queue.**

7. **The Bus Controller will then close the communications window by issuing a Close Window command, which terminates execution of the DPREQ instruction. The window address of the Bus Controller (in the first register) that was communicated with is cleared when the value placed in the status register (third register) by the CPU is not equal to 1.**

NOTE

for a more detailed description and examples of using the DPREQ function to open communications with the Genius I/O system, refer to Chapter 6 in the Genius I/O System User% Manual, GEK-90486.

Artisan Technology Group - Quality Instrumentation ... Guaranteed | (888) 88-SOURCE | www.artisantg.com

CHAPTER 5
TROUBLESHOOTING AND REPAIR

INTRODUCTION

This chapter is a guide to the basic troubleshooting and repair information required if a malfunction of your Series Six Plus PLC system should occur. Section 1 contains information on troubleshooting and repair of the Central Processing Unit, while Section 2 contains information on troubleshooting and repair of the I/O system. Parts lists are included as a reference for ordering renewal parts.

MINIMUM DOWNTIME

The technology used in the design of the Series Six Plus programmable logic control system is such that under normat operating conditions few hardware failures are expected. If any failures should occur, they can quickly be isolated and the defective assembly replaced with minimum downtime. If GENIUS i/O blocks are included as part of your I/O structure, downtime is reduced to an absolute minimum for the I/O structure.

LOGICAL TROUBLESHOOTING

Troubleshooting is accomplished by thinking logically of the function of each part of the system and how they relate to each other. A basic understanding of the various indicator lights will usually quickly isolate the problem to the CPU rack, an I/O rack, the programming device or any peripheral device in the system.

By use of the programming device, which can be a Workmaster industrial computer, CIMSTAR I industrial computer, IBM PC, PC-XT, PC-AT, or Program Development Terminal (PDT cannot be used with the Expanded functions) in conjunction with the CPU, troubteshooting of the program is easily accomplished. Most inputs or outputs can be looked at and changed or overridden as required.

The GENIUS I/O diagnostics provide a great deal of information about faults that may occur in the Genius I/O system. For use of the GENIUS I/O diagnostics, refer to Chapter 4 of this manual. For complete information on GENUS I/O hardware, refer to the GENIUS I/O System User's Manual, GEK-90486.

The total system must be considered when problems occur. The CPU, Workmaster computer, PDT, or other programming device, Redundant Processor Unit, I/O modules, GENIUS I/O blocks and external devices connected to or controlled by the PLC must all be operating and connected properly. All screw-down or soldered connections should be checked carefully as well as all cable connections.

Troubleshooting procedures for the RPU and other peripheral devices can be. found in the user's manual for the particular device.

Artisan Technology Group - Quality Instrumentation ... Guaranteed | (888) 88-SOURCE | www.artisantg.com

TROUBLESt300TING

The troubleshooting and repair information contained in this chapter is designed to help you isolate and correct any problems that may arise in your Series Six Plus programmable logic control system. It is recommended that all maintenance and programming personnel become familiar with this manual and all applicable related manuals so that if a problem does arise it can be isolated quickly and the defective part replaced, thus minimizing downtime of the system.

However, we realize that troubleshooting isn't always that simple. Sometimes you need someone to talk to who can answer your questions. When you do, don't hesitate to call your local authorized GE Fanuc – NA Programmable Control Distributor. If you are unsure of the location of your nearest authorized Distributor, then call your local GE Fanuc – NA Sales Office.

Replacement Module Concept

The troubleshooting and maintenance techniques described in this manual promote the concept of complete board replacement. The prime objective of this concept is to minimize system downtime.

Isolate the Problem

When a problem arises, first isolate it to the major assembly (programmer, Central Processing Unit, I/O rack, etc.), then to the defective module within that assembly. The defective module is then replaced from a duplicate set of modules maintained on site. Your production line or system is back up fast.

The defective module can be returned through normal channels under warranty or for service without keeping your production line or system down for an extended period of time. The replacement concept minimizes downtime to minutes as opposed to days. The potential savings far outweigh the comparatively small cost of duplicate modules.

If you did not purchase a duplicate set of modules with your initial system, we recommend that you contact your local GE Fanuc – NA Programmable Control Distributor or GE Fanuc – NA Sales office and do so. Then, with the help of this manual and adequate spare parts, you will be able to troubleshoot and repair just about any problem that may arise.

Artisan Technology Group - Quality Instrumentation ... Guaranteed | (888) 88-SOURCE | www.artisantg.com

SECTION 1
CENTRAL PROCESSING UNIT TROUBLESHOOTING

FAULT ISOLATION AND REPAIR

The malfunction causing the improper operation of a CPU can be isolated by checking the condition of status indicator lights and key switch positions. The status indicator lights and key switches indicate the current operating condition of the CPU and I/O system.

Check Condition of Status Indicator Lights

The normal condition of the status indicator lights is the ON state. If any of the status indicator lights are not on, check the troubleshooting sequence in this section for the proper course of action. Tables are provided throughout this section which provide definitions of the ON/OFF status of each of the indicator lights.

Table 5.1 is an indicator chart that gives a quick reference to the normal condition and definition of the status indicator lights for the Series Six Plus programmable logic controller's CPU.

Check Position of Key Switches

Be sure to note the positions of the key switches on the CPU, Workmaster computer, or CIMSTAR I industrial computer, and any pertinent switches on other programming devices, which can be the IBM PC, PC-XT, PC-AT Personal Computers, or the Program Development Terminal.

Refer to Figure 5.1 which is an illustration of a Series Six Plus programmable logic controller's CPU showing the location of the status indicator lights and the key switches. The numbers that point to indicators and switches on the illustration are for reference purposes and refer to the same number in the troubleshooting sequences on the following pages.

Artisan Technology Group - Quality Instrumentation ... Guaranteed | (888) 88-SOURCE | www.artisantg.com

Table 5.1 CPU INDICATOR CHART

MODULE	INDICATOR	NORMAL CONDITION	DEFINITION
POWER SUPPLY	POWER	ON	Power is applied, all dc voltages are within tolerance.
I/O CONTROL	CHAIN OK	ON	All I/O stations in primary chain have continuity, good output parity and power supply is good.
	PARITY	ON	Input data parity is good.
	ENABLED	ON	CPU is in the normal Run Enabled mode (outputs enabled).
	DPU	ON	**DPU** connected and operating normally. (If no DPU in system and **DPU** present jumper is configured, light will be on).
ARITHMETIC CONTROL	RUN	ON	User program is running with a sweep time of less than 300 ms 250 ms.
	CHECK	ON	**CPU** passed self-test routine which is executed once per sweep, and user program executes in less than 300 ms.
LOGIC MEMORY	BATTERY	ON	Status of CMOS RAM back-up battery.
	PARITY	ON	Parity error in Logic, Register or Internal memory.
AUXILIARY	CHAIN OK	ON	All I/O stations in auxiliary chain have I/O continuity, good output parity and power supply is good.
	PARITY	ON	Input data parity is good.
	ENABLED	ON	CPU is in the normal Run Enabled mode (outputs enabled).

Artisan Technology Group - Quality Instrumentation ... Guaranteed | (888) 88-SOURCE | www.artisantg.com

a42219

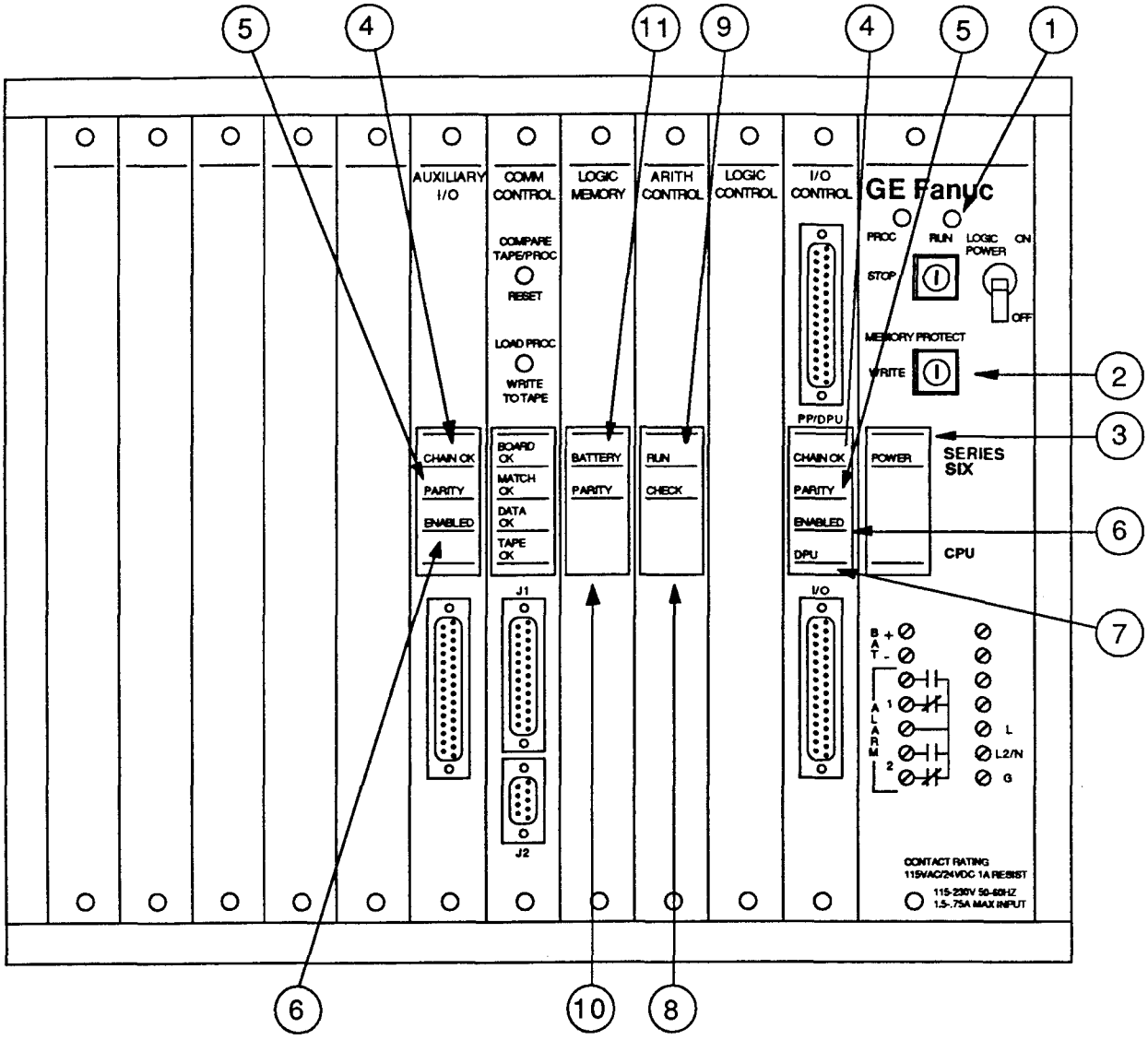

Figure 5.1 SERIES SIX PLUS CPU INDICATORS AND SWITCHES

Artisan Technology Group - Quality Instrumentation ... Guaranteed | (888) 88-SOURCE | www.artisantg.com

(1) CPU RUN/STOP KEY SWITCH

Position	Definition
STOP	CPU is unconditionally in the STOP mode.
RUN	CPU is in the RUN mode unless this condition has been altered by commands from the programmer or other device or by the state of various control signals. When this switch is turned from STOP to RUN, the system will start with the outputs enabled. IF THE CPU WILL NOT RUN, CHECK OTHER STATUS LIGHTS.

(2) MEMORY PROTECT KEY SWITCH

Position	Definition
PROTECT	The contents of Logic Memory and Override Tables are protected from being changed.
WRITE	The user program stored In the Logic memory may be changed and an overrIde condition may be added to or removed from inputs or outputs through the Override Table.

If key switches in steps 1 and 2 do not operate and all status indicator lights are OK, check the P2 connections on the CPAX board in the power supply module (See figure 5.2).

(3) POWER LIGHT - CPU POWER SUPPLY

Status	Definition
ON	The voltage levels of all 3 dc outputs V, +12V, -12 are present and within the specified tolerance.
OFF	One or more of the voltage levels is out of tolerance. The CPU RUN and ENABLE status indicator lights should also be off. Alarm Number 1 switches.

Artisan Technology Group - Quality Instrumentation ... Guaranteed | (888) 88-SOURCE | www.artisantg.com

Corrective Action

- Check the power supply voltages by partially pulling out the power supply module and measuring the voltages. The voltages are checked at the terminal board assembly (TB1) located at the top of the power supply board. The connections are labeled as shown below.

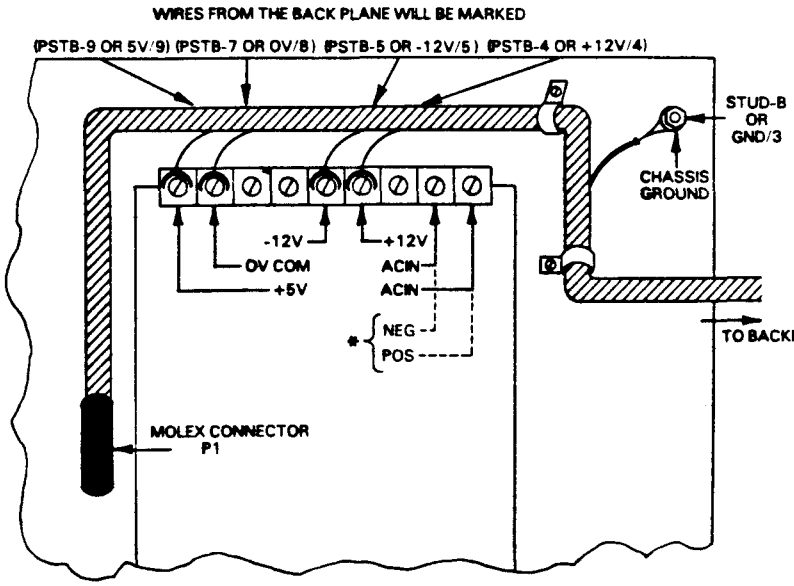

*AC source input shown. If power supply is a dc source input, terminals 1 and 2 are labeled POS (pin 1) and NEG (pin 2).

Figure 5.2 POWER SUPPLY OUTPUT VOLTAGE TERMINALS (TB1)

Voltage	Range
+5 V dc	+4.75 to +5.25 V dc
+12 V dc	+11.40 to +12.60 V dc
-12 V dc	-11.40 to -12.60 V dc

- Check the P1 connections on the CPAX board in the power supply module.

NOTE

A printed circuit board, backplane or cable short may be loading down the power supply. If a dc voltage is found to be out of tolerance, back out all printed circuit boards and then recheck the voltage. If it is still bad, replace the power supply. If the voltage is OK, reinsert the printed circuit boards one at a time to determine which one is loading down the power supply. Keep in mind that the power supply may be bad under normal load conditions.

If any of the voltages are out of tolerance replace the power supply. Figure 5.3 is a block diagram of the CPU power supply for your reference.

NOTE

After a power fault, the system will come back on in the mode (STOP, RUN ENABLED, or RUN DISABLED) in which it was operating before power was lost.

Artisan Technology Group - Quality Instrumentation ... Guaranteed | (888) 88-SOURCE | www.artisantg.com

a41074

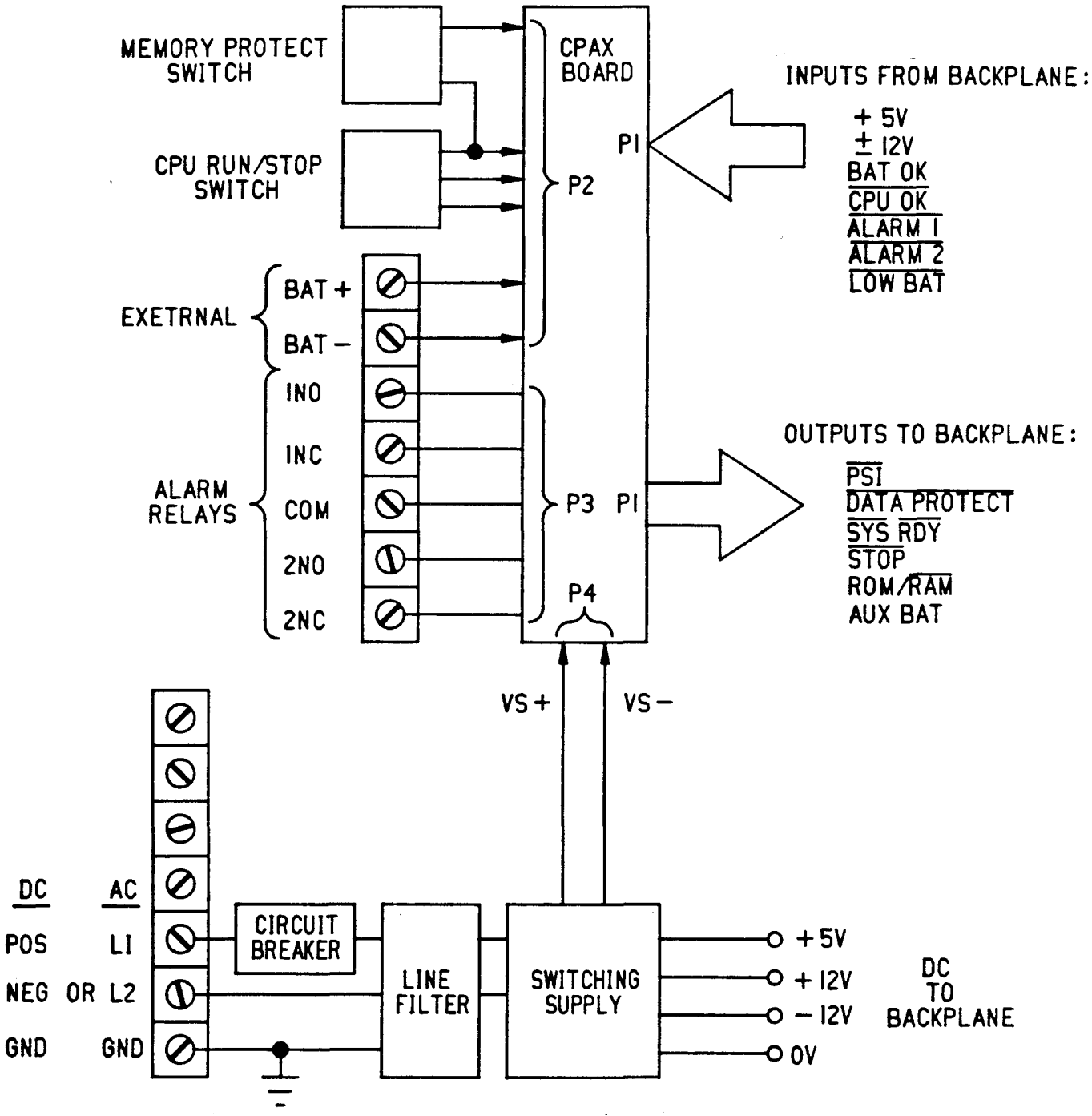

Figure 5.3 CPU POWER SUPPLY BLOCK DIAGRAM

Artisan Technology Group - Quality Instrumentation ... Guaranteed | (888) 88-SOURCE | www.artisantg.com

(4) CHAIN OK LIGHT - I/O CONTROL and AUXILIARY I/O MODULES

Status	Definition
ON	Continuity, output data parity and power supplies are good at all I/O stations in the primary and auxiliary chains.
OFF	A continuity, power supply or output data parity error exists at one or more main or auxiliary chain I/O station. The CPU RUN and ENABLE lights are off. Alarm No. 1 relay switches. When the fault is removed, the CPU resumes its previous status.

Corrective Action

- Check for proper I/O chain signal termination on the last I/O Receiver or Advanced I/O Receiver module in each I/O station in a parallel chain.
- Check cable connections to each I/O rack.
- Check for power on each I/O rack. For standard I/O power supplies, if power indicator is off, check the +5 V dc on the terminal board assembly by partially pulling out the Power Supply module. Check voltage as in step 3. If the +5 V dc is out of tolerance, replace the I/O power supply. If the power supply is a high capacity supply, also check the +12 and -12 V dc terminals.
- Check CHAIN OK and CHAIN PARITY lights in the CPU station I/O racks.

1. If any of the above status lights are off proceed to the I/O troubleshooting section.
2. If all status lights are on, replace the I/O Control or Auxiliary I/O module as applicable.

Artisan Technology Group - Quality Instrumentation ... Guaranteed | (888) 88-SOURCE | www.artisantg.com

(5) PARITY LIGHT - I/O CONTROL AND AUXILIARY I/O MODULES

Status	Definition
ON	Input data parity is good at the I/O Control or Auxiliary I/O module.
OFF	Input data parity error exists. The CPU RUN and ENABLE lights are off. Alarm Number 1 relay switches.

Corrective Action

- Verify that no two input cards have the same address.
- Turn the CPU Key Switch to STOP, then power-down and back up.
- If an input parity error is confirmed, check Scratch Pad Display on the Workmaster computer, which will give the address of the input board where the data originated. Refer to GEK-25379, the Logicmaster 6 Programming and Documentation Software User's Manual, for more information on the Scratch Pad.
- Replace the Input board corresponding to the address shown in the Scratch Pad.
- Replace I/O cables connected to that I/O rack.
- Replace the I/O Receiver or Advanced I/O Receiver in that I/O rack.
- Replace the I/O Transmitter between that rack and the CPU.
- Replace the I/O Control or Auxiliary I/O module.

Artisan Technology Group - Quality Instrumentation ... Guaranteed | (888) 88-SOURCE | www.artisantg.com

(6) ENABLED LIGHT - I/O CONTROL and AUXILIARY I/O MODULES

Status	Definition
ON	Outputs are enabled. CPU is operating in the RUN Enabled mode.
OFF	Outputs are disabled. CPU is in the Run Disabled or STOP mode. If in the STOP mode, the RUN light on the Arithmetic Control module is also off.

NOTE

When CPU is in RUN DISABLED mode, outputs are disabled, but inputs are still updated in the CPU status table.

Corrective Action

- Check the position of the CPU Run/Stop key switch. See step 1
- Check the condition of other status lights (PARITY, CHAIN OK and POWER).
- If no other problem is indicated by other status lights, try re-enabling the CPU from the Workmaster computer or with the RUN/STOP key switch.

(7) DPU LIGHT - I/O CONTROL

Status	Definition
ON	The Data Processor Unit is connected and operating properly or DPU not connected and option jumper is connected on the board.
OFF	A continuity error or other type problem exists in the DPU.

Corrective Action

- Check power to the Data Processor unit.
- Check the power supply voltages in the Data Processor Unit rack.
- Refer to the DPU User's Guide for further troubleshooting procedures.

Artisan Technology Group - Quality Instrumentation ... Guaranteed | (888) 88-SOURCE | www.artisantg.com

(8) CHECK LIGHT - ARITHMETIC CONTROL MODULE

Status	Definition
ON	CPU execution sequence is proceeding normally, the self-test routine is passed at least once each 300 ms ±50 ms.
OFF	CPU self-test routine has not been passed within 300 ms ±50 ms, or user program execution time takes longer than 300 ms to execute. The RUN and ENABLE lights are off. Alarm Number 1 relay switches. Reset signal is sent to the I/O chain.

Corrective Action

- Check the condition of the POWER and memory BATTERY lights. If any are off, correct them first.
- Turn the CPU key switch to STOP, power-down and back up.
- Make sure that the user program has an End-of-Sweep *[ENDSW]* instruction.
- Disconnect any peripheral device such as the Workmaster computer or Operator Interface Terminal.
- Ensure that the short length of ribbon cable connecting the Arithmetic Control and Logic Control modules is securely connected.
- Reseat the Arithmetic Control and Logic Control modules. If this does not correct the problem, replace the Arithmetic Control and the Logic Control modules one at a time.

NOTE

A program which causes the CPU sweep time to be in the 300 ms ±50 ms range can cause the CHECK light to go off. Use care when programming subroutines, since they can cause the sweep time to be lengthened considerably.

Artisan Technology Group - Quality Instrumentation ... Guaranteed | (888) 88-SOURCE | www.artisantg.com

(9) RUN LIGHT - ARITHMETIC CONTROL MODULE

Status	Definition
ON	CPU execution sequence is proceeding such that the self-test routine is passed and the I/O scan is completed at least once each 300 ms ±50 ms. CPU is in the RUN mode.
OFF	CPU is in the STOP mode. The Enable light is off.

Corrective Action

- Check the position of the RUN/STOP key switch, See step (1).
- Check the condition of other status lights (PARITY, BATTERY, CHAIN OK, CHECK and POWER).
- If no other problem is indicated, try restarting the CPU with the Workmaster computer or CPU key switch.
- Ensure that the short length of ribbon cable connecting the Arithmetic Control and Logic Control modules is securely connected.
- Reset the Arithmetic Control and/or the Logic Control modules.
- If reseating does not solve the problem, replace the two modules, one at a time.

NOTE

Both the RUN and the CHECK indicator may flash momentarily when power is applied to the CPU. A valid RUN or CHECK state is indicated by a steady glow of the LED.

Artisan Technology Group - Quality Instrumentation ... Guaranteed | (888) 88-SOURCE | www.artisantg.com

(10) PARITY LIGHT - LOGIC (COMBINED) MEMORY MODULE

Status	Definition
ON	Logic Memory parity is good.
OFF	Parity error exists in logic, register, or internal memory. The RUN and ENABLE lights are off. Alarm Number 1 relay switches. The parity error and its address is recorded in the Scratch Pad CPU Flags.

Corrective Action

- Turn the CPU RUN/STOP key switch to STOP and power-down the CPU, then power-up the CPU and observe the CPU SCRATCH PAD data on the Workmaster computer.
- Turn the CPU RUN/STOP key switch back to RUN.
- If the CPU does not go into the RUN mode at this time, the parity error is still present and the logic memory will have to be restored using the Workmaster computer.
- Turn the key switch on the Workmaster computer to OFF-LINE.
- Go to the Supervisor Display, activate the LOAD/STORE/VERIFY function and LOAD a back-up copy of your program into the Workmaster computer.
- If you want to send all of the tables (I/O, Registers, Overrides) and logic (ladder diagram) to the CPU, leave the Workmaster computer key switch OFF-LINE. If you want to send only the logic, turn the Workmaster computer to ON-LINE. You must transfer the part of memory that has the fault.
- STORE the program in the CPU memory.
- If the parity error still exists, replace the Combined Memory module.
- ReSTORE logic memory again as explained above.
- Also do the CLEAR PARITY ERROR function from the Utilities Menu if SP or TT (Scratch Pad or Transition Table) parity errors are seen. Do this by going from SUPER to UTIL (F8) to CLEAR PARITY (F7).

Artisan Technology Group - Quality Instrumentation ... Guaranteed | (888) 88-SOURCE | www.artisantg.com

(11) BATTERY LIGHT - LOGIC (COMBINED) MEMORY MODULE

Status	Definition
ON	Battery condition is normal; 2.75 to 3.0 V dc.
FLASHING	Battery low; 2.54 to 2.75 V dc. CPU continues running and will restart if stopped. Alarm Number 2 switches. To ensure continued protection of memory contents, replace the battery before it fails.
OFF	Battery failed; below 2.54 V dc. CPU continues running but will not restart if stopped. Alarm Number 2 remains switched. Memory contents will be lost when power is turned off or lost.

BATTERY REPLACEMENT INFORMATION

- The Lithium-Manganese Dioxide battery will maintain the user program in memory for a period of 6 months (minimum) on the shelf (at a temperature range of 0° to 65°C).
- It is recommended that the battery be replaced every 4 years in a running CPU.
- If a battery fails, replace it immediately.
- To install a new battery (refer to Figure 5.4) on a memory board proceed as described below.

Replacing a Battery

- *Power does not need to be turned off to replace a battery. The battery can be replaced while the CPU is running.*
- *Remove the faceplate from the memory module slot by turning the quarter-turn screw counter clockwise and pull the faceplate towards you.*

Battery Light Flashing

- If the Battery light was flashing, install the new battery. (Catalog Number IC600MA507) as follows:

  1. Do not disconnect the battery, but do remove it from its mounting clips.
  2. Place the new battery in the clip.
  3. Connect the new battery by using the second (unused) battery connector.
  4. Disconnect the defective battery and discard it.

Artisan Technology Group - Quality Instrumentation ... Guaranteed | (888) 88-SOURCE | www.artisantg.com

WARNING

Observe the following precautions when handling a Lithium battery. Do not discard the Lithium-Manganese Dioxide battery in fire. Do not attempt to recharge the battery. Do not short the battery. The battery may burst or burn or release hazardous materials.

5. Care must be taken not to short any runs on the memory board during battery replacement as this will result in the loss of memory data.

Battery Light Out

- If the BATTERY light was out, install the new battery as follows:

  1. Do not disconnect the defective battery from its battery connector, but do remove it from its mounting clips. As long as system power is not removed the data in the memory is good. If power is lost, the memory data may become invalid and the CPU will not restart until the new battery is installed. Be sure to have a backup of your program.

  2. Place the new battery in the mounting clip.

  3. Connect the new battery by using the second (unused) battery connector.

  4. Care must be taken not to short any runs on the memory board during battery replacement as this will result in the loss of memory data.

  5. Disconnect the defective battery from its battery connector and discard it.

- Replace the faceplate. Secure it in place by turning the quarter-turn thumbscrews clockwise until they are tight.

- If power was removed and the BATTERY light had been flashing, turn power on. The CPU should be running in its previous state.

- If the BATTERY light had been out, and power was removed, the memory must be reloaded before the CPU can be restarted since the memory may contain invalid data.

Artisan Technology Group - Quality Instrumentation ... Guaranteed | (888) 88-SOURCE | www.artisantg.com

a41048

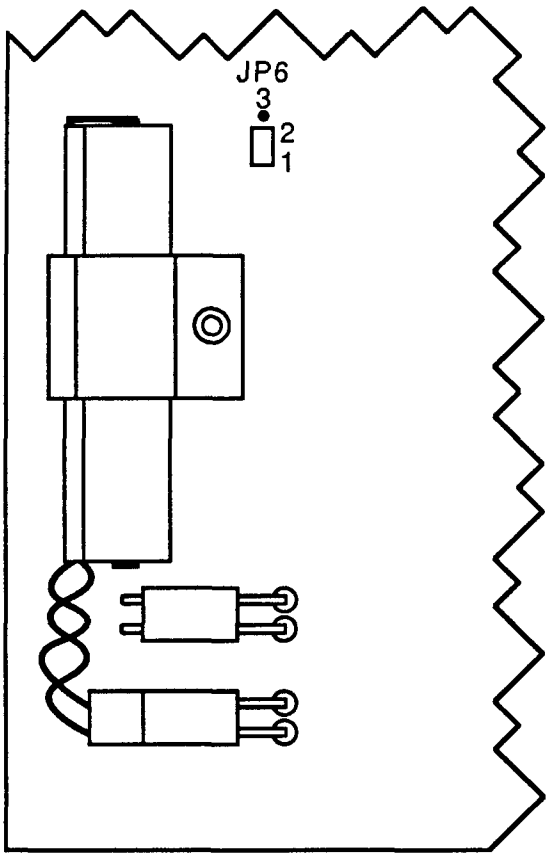

Figure 5.4 BATTERY MOUNTING CLIPS AND CONNECTORS

(12) STATUS INDICATOR LIGHTS IN THE CORRECT STATE

If the status indicator lights are in the correct state but the CPU is not functioning properly, the malfunctions below may describe the problem. If so, follow the procedures listed under the appropriate malfunction.

- The CPU is running, but is not solving the ladder diagram correctly.

  1. Check to see if the problem is resulting from a user program error such as overrides, multiple register usage, SKIP, MCR, or Suspend I/O instructions.

  2. Reset the Arithmetic Control and Logic Control boards.

  3. Ensure that the ribbon connector between the Arithmetic Control and Logic Control modules is secure.

  4. Replace the Arithmetic Control board.

  5. Replace the Logic Control board.

Artisan Technology Group - Quality Instrumentation ... Guaranteed | (888) 88-SOURCE | www.artisantg.com

- The CPU will not communicate with the Workmaster computer or other programming device, which may be a CIMSTAR I industrial computer, IBM PC, PC-XT, or PC-AT Personal Computer.

  1. Check the cable connector from the Workmaster computer to the CPU. Ensure that it is securely connected.

  2. Ensure that the Workmaster computer will work with another CPU.

  3. Reset the I/O Control board, Arithmetic Control board and the Logic Control board. Ensure that the Logic Control to Arithmetic Control ribbon cable is securely connected.

  4. Ensure that there are no I/O address DIP switches with all open positions. This is an illegal address and conflicts with the Workmaster window.

  5. If reseating does not solve the problem, replace the above boards, one at a time in the order given above.

- Memory Parity error on initial power-up.

  On the Workmaster computer, select the main Utility menu. Then select the CLEAR PARITY soft key (F7). Follow the screen prompts to clear the parity error. For more detailed information on start-up procedures, refer to Chapter 3, Installation.

- DPU light not on (I/O Control module) and DPU is not connected.

  Check I/O Control module board option jumpers. Jumper should be connected from A to B.

ALARM RELAY

The CPU can be monitored at a location remote from the CPU by connecting an alarm device (buzzer, light, etc.) to the alarm relay output terminals on the CPU power supply. The alarm contacts on the power supply terminal board are shown below in figure 5.5.

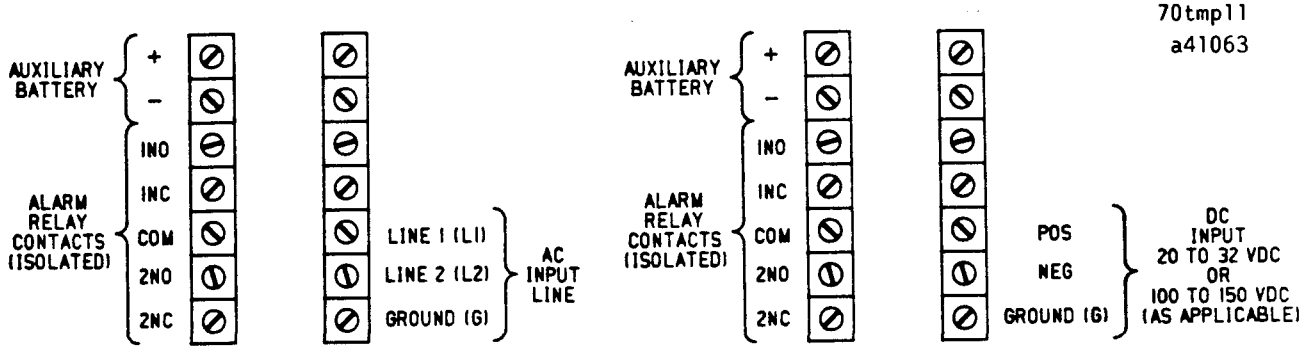

AC SOURCE INPUT DC SOURCE INPUT

Figure 5.5 CPU POWER SUPPLY TERMINAL BOARD

Artisan Technology Group - Quality Instrumentation ... Guaranteed | (888) 88-SOURCE | www.artisantg.com

Alarm relay outputs are rated at 115 V ac or 28 V dc, 1 amp resistive load.

Alarm 1 is switched by hard failures, the CPU status is set to STOP. The RUN and ENABLE lights go off.

Alarm 2 is switched by a soft failure, error indications are recorded in memory, the CPU does not go to STOP.

Alarm conditions are listed in the table shown below. Refer to steps 1 through 12 for troubleshooting of alarm conditions.

Table 5.2 CONDITIONS CAUSING ALARM RELAYS TO SWITCH

ALARM 1	ALARM 2
CPU or I/O parity error	Voltage of memory battery drops too low.
CPU self-test failure.	CPU or I/O power supply is turned off.
CPU watchdog timer timed out.	Communications Control or Data Processor error (fault jumpers in or out of circuit).
Memory backup battery dead when power turned on.	
Any CPU or I/O power supply voltage out of tolerance.	
CPU or I/O power supply turned off.	
Communications Control or Data Processor error (fault jumpers in circuit).	

CAUTION

User devices connected to each set of alarm terminals should present a resistive load drawing no more than 1 amp of current at 115 V ac or 28 V dc. Failure to observe this caution may result in damage to the CPAX circuit board in the power supply.

Artisan Technology Group - Quality Instrumentation ... Guaranteed | (888) 88-SOURCE | www.artisantg.com

SECTION 2
I/O SYSTEM TROUBLESHOOTING

TROUBLESHOOTING THE I/O RACK POWER SUPPLY

Two versions of the I/O power supply are available for use in the I/O racks; Standard and High Capacity.

NOTE

Standard and High Capacity power supplies are not interchangeable. A Standard power supply must go in a Standard I/O rack and a High Capacity power supply must go in a High Capacity I/O rack.

Table 5.3 I/O POWER SUPPLIES

I/O RACK TYPE	POWER SUPPLY CATALOG NUMBER	DESCRIPTION
Standard ac	IC600PM502	Power Supply provides +5 V dc at 6.1 amps, allows 100 units of load. Operates on input voltages from 95 to 260 V ac
High Capacity ac	IC600PM503	Power Supply provides +5 V dc at 16.5 amps, +12 V dc at 1.5 amps and -12 V dc at 1.0 amp. allows 275 units of load. Operates on input voltages from 95 to 260 V ac
High Capacity dc	IC600PM542 24 V dc	Same output voltage ratings as above. Requires a dc input voltage of 20 to 32 V dc.
High Capacity dc	IC600PM546 125 V dc	Supplies same output voltages as above. Requires a dc input voltage of 100 to 150 V dc.

There is one status indicator light on the I/O power supply.

INDICATOR	STATUS	DEFINITION	
POWER	ON	Power is applied, output voltage is within tolerances as listed below.	
		Output Voltage	Valid Range for Output Voltage
		+5 V dc	+4.75 to 5.25 V dc
		+12 V dc	+11.4 to +12.6 V dc (High Capacity only)
		-12 V dc	-11.4 to -12.6 V dc (High Capacity only)
	OFF	No ac or dc input power. Output voltage(s) out of tolerance. CHAIN OK lights from the applicable rack back to and including the CPU turn off. CPU RUN and ENABLE lights turn off. Alarm 1 relay switches.	

Artisan Technology Group - Quality Instrumentation ... Guaranteed | (888) 88-SOURCE | www.artisantg.com

If any voltage is missing or out of tolerance, use the following procedure.

- Check ac input power to power supply terminal board for power supply requiring an ac voltage source.
- Check dc input power to power supply terminal board for power supply requiring a dc voltage source.

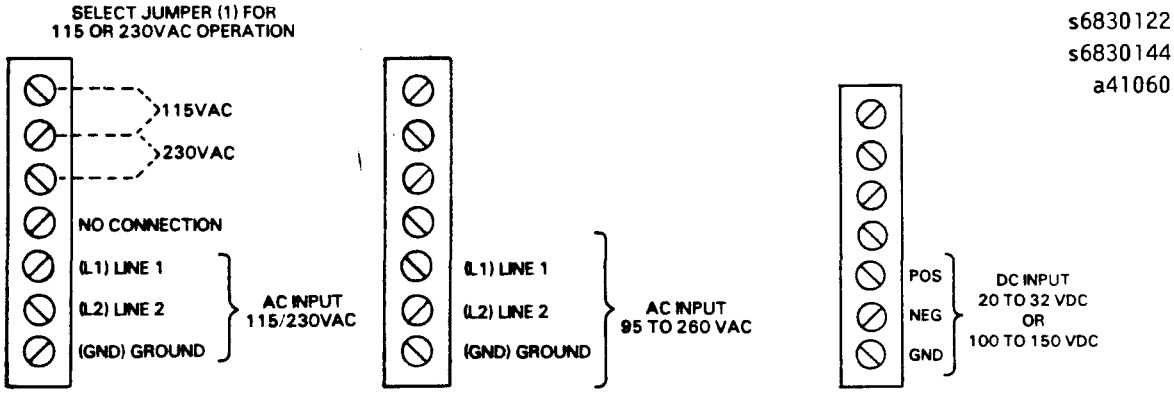

STANDARD (AC IN) HIGH CAPACITY (AC IN) HIGH CAPACITY (DC IN)

Figure 5.6 INPUT VOLTAGE TERMINAL BOARD

- Check the +5 V dc (also +12 V dc and -12 V dc on High Capacity power supplies) output by pulling the power supply module partially out of its slot and measuring the voltage at the screw connection on the board. The terminal board connections are as shown below. **If any voltage is out of tolerance, replace the applicable power supply.**

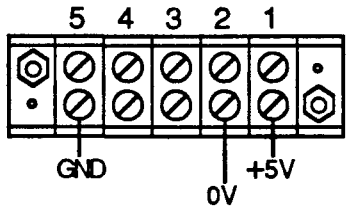

Figure 5.7 OUTPUT VOLTAGE TERMINAL BOARD FOR STANDARD POWER SUPPLY

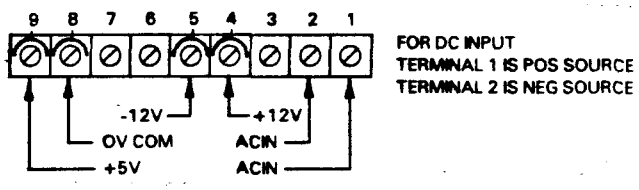

Figure 5.8 OUTPUT VOLTAGE TERMINAL BOARD
FOR HIGH CAPACITY POWER SUPPLY

NOTE

A Printed circuit board, backplane or cable short may be loading down the power supply. If any dc voltage is out of tolerance, back out all printed circuit boards and recheck the voltage. If still bad, replace power supply. If voltage is OK, reinsert printed circuit boards one at a time to determine which one is loading the supply down. Keep in mind that the supply may be bad under normal load conditions.

Artisan Technology Group - Quality Instrumentation ... Guaranteed | (888) 88-SOURCE | www.artisantg.com

I/O INDICATOR CHART

Table 5.4 is an chart that gives a quick reference to the meaning of the status lights on the I/O system modules.

Table 5.4 I/O MODULE STATUS INDICATOR DEFINITIONS

MODULE	INDICATOR	STATUS	DEFINITION
POWER SUPPLY	POWER	ON	Power is applied and all dc voltages are present and within tolerance.
		OFF	One or more dc voltages is too low.
AC/DC INPUT	1 through 8	ON	Corresponding Input is energized.
AC/DC OUTPUT	1 through 8	ON	Corresponding output is energized.
	BF (1 - 8)	ON	Blown fuse in this Output circuit.
12/24/48 V dc Output	1 through 8	ON	Corresponding Output is energized.
	BF (1 - 8)	ON	Blown fuse in this Output circuit.
120 V dc Output	1 through 8	ON	Corresponding Output is energized.
	BF (1 - 8)	ON	Blown fuse in this Output circuit.
Isolated 115 V ac/dc Input	1 through 8	ON	Corresponding Input circuit is energized
Isolated 115 V ac/dc Output	1 through 6	ON	Corresponding Output circuit energized.
	BF (1 - 6)	ON	Blown fuse in this output circuit.
Protected 115 V ac Output	BOARD FAULT	ON	Board fault detected.
		OFF	Board operation normal.
	1 through 4	ON	Corresponding Output circuit energized.
	BF (1 - 4)	ON	Blown fuse in this output circuit.
High Density Input	SOURCE INPUTS	ON	Source Input mode.
		OFF	Sink Input mode.
	DATA INV	ON	Input data is inverted.
		OFF	Input data is not inverted.
High Density Output	HOLD STATE	ON	Hold last State.
		OFF	Disable Outputs when required.
	DATA INV	ON	Output Data Inverted.
		OFF	Output Data is not inverted.

Artisan Technology Group - Quality Instrumentation ... Guaranteed | (888) 88-SOURCE | www.artisantg.com

Table 5.4 I/O MODULE STATUS INDICATOR DEFINITIONS (Continued)

MODULE	INDICATOR	STATUS	DEFINITION
Analog Input	BOARD OK	ON	Module operating normally.
		OFF	A/D converter malfunction. I/O rack power supply problem. CPU in Stop or Run Disabled mode.
Analog Output	BOARD OK	ON	Module operating normally.
		OFF	Board malfunction. I/O rack power supply problem. CPU in Stop or Run Disabled mode.
Reed Relay Output	1 through 6	ON	Relay coil is energized.
		OFF	Relay coil is de-energized
Interrupt Input	1 through 8	ON	Current flowing through input circuit.
Thermo-Couple Input	BOARD OK	ON	Module operating normally.
		OFF	Board malfunction.
I/O Receiver	CHAIN OK	ON	Power is OK in this and all downstream racks and stations. Continuity is OK to all downstream stations.
	CHAIN PARITY	ON	Output parity is OK at all downstream stations connected through an I/O Transmitter in this rack.
	LOCAL PARITY	ON	Output parity good at this module.
I/O Transmitter	CHAIN OK	ON	Power is OK at all downstream stations. Continuity OK to all downstream stations.
	CHAIN PARITY	ON	All downstream stations have good output parity
	ISOLATED POWER	ON	Output voltage of the +5 V dc isolated power converter is within tolerance.
	FAULT ENABLE	ON	System will stop for a local fault condition.
		OFF	System will NOT stop for a local fault condition.
	CHAIN ACTIVE *	ON	Expanded I/O chain active.
		OFF	Expanded I/O chain inactive.
		*	This LED is not visible with faceplate in place, for use in system set up only.

Artisan Technology Group - Quality Instrumentation ... Guaranteed | (888) 88-SOURCE | www.artisantg.com

Table 5.4 I/O MODULE STATUS INDICATOR DEFINITIONS (Continued)

MODULE	INDICATOR	STATUS	DEFINITION
REMOTE I/O DRIVER	LOCAL OK	ON OFF	Module operating normally. Fault exists in this module.
	LINK OK	ON OFF	Communications link between this module and Remote I/O Receiver is good. Communications error between this module and Remote I/O Receiver.
	REMOTE OK	ON OFF	Remote system operating normally. Valid I/O data received from Remote Receiver. Fault in Remote I/O system. Power supply failure, loose cable, module not seated properly, etc.
	REMOTE PARITY	ON OFF	No parity errors in remote I/O system. Parity error detected in Remote I/O system. On-board jumper selects if CPU will stop or continue running.
REMOTE I/O RECEIVER	LOCAL OK	ON OFF	Module operating normally. Communications failure due to timeout or successive transmission errors.
	LINK OK	ON OFF	Communications link between this module and Remote I/O Driver established and valid. Communications error between this module and Remote I/O Driver.
	REMOTE OK	ON OFF	Remote system operating normally. Fault in Remote I/O system. Illegal address block, loose connection, power supply failure, etc.
	REMOTE PARITY	ON OFF	No parity errors have been detected in this Remote I/O system. Parity error or errors detected in this Remote I/O system.

Artisan Technology Group - Quality Instrumentation ... Guaranteed | (888) 88-SOURCE | www.artisantg.com

Table 5.4 I/O MODULE STATUS INDICATOR DEFINITIONS (Continued)

MODULE	INDICATOR	STATUS	DEFINITION
Advanced I/O Receiver	CHN OK	ON	Power and cable continuity good to all downstream racks.
		OFF	One of the above conditions not met.
	CHNPAR	ON	Output parity good on rack backplane.
		OFF	Output parity error detected from I/O Transmitter or Remote I/O Driver in rack.
	LOCPAR	ON	Output parity good in this rack.
		OFF	Output parity error detected from an upstream rack.
	ADDPAR	ON	I/O address from CPU is valid.
		OFF	Parity error detected in I/O address received from CPU.
	DATPAR	ON	I/O parity from CPU is valid.
		OFF	Parity error detected in I/O data from CPU.
	XMITOK	ON	Power and cable continuity good to all downstream racks connected to an I/O Transmitter or Remote I/O Driver located in this rack.
		OFF	Latched off if above conditions not met in one or more connected racks.
	CHN OK	ON	Power and cable continuity good to down-stream racks connected to this module.
		OFF	Latched off if above conditions not met in one or more connected racks.
	PS OK	ON	Power supply in this rack in tolerance.
		OFF	Power supply in this rack is out of tolerance. Will be latched off when power is applied to power supply.
	IN PAR	ON	No input parity error is sensed.
		OFF	Latched off if an input parity error is sensed from I/O Transmitter or Remote I/O Driver in this rack or from any down-stream I/O rack connected directly to this module.
	W DOG	ON	Communications to CPU good.
		OFF	Latched off if module has not had communications with the CPU within the previous one second.
	OUTPAR	ON	No parity error detected in either the I/O address or I/O data from the CPU.
		OFF	Latched off if a parity error has been detected. This is a latch for ADDPAR and DATPAR indicators.

Artisan Technology Group - Quality Instrumentation ... Guaranteed | (888) 88-SOURCE | www.artisantg.com

Table 5.4 I/O MODULE STATUS INDICATOR DEFINITIONS (Continued)

MODULE	INDICATOR	STATUS	DEFINITION
HIGH SPEED COUNTER	OUT 1	ON	Output 1 is energized.
	OUT 2	ON	Output 2 is energized.
	COUNT	BLINK	Pulses are being received.
	BOARD OK	ON	Board has passed self diagnostic test.
		OFF	Hardware failure.
AXIS POSITIONING MODULE TYPE 1	BOARD OK	ON	Board has passed self diagnostic test.
		OFF	Hardware failure or board is not in a high Capacity I/O rack or a Series Six Plus CPU rack.
	ENABLED	ON	Capable of controlling position turned on by discrete command, ENABLE APM.
		OFF	Any error condition or the REMOTE STOP command.
	FDBK OK	ON	Resolver feedback is present.
		OFF	Resolver feedback is not present.
AXIS POSITIONING MODULE TYPE 2	BOARD OK	ON	Board has passed self diagnostic test.
		OFF	Hardware failure or board is not in a High Capacity I/O rack or a Series Six Plus CPU rack.
	APM ENABLED	ON	Board is good and has received the ENABLED APM command.
		OFF	Failed power-up self diagnostics, any error condition, or has received the RESET command.
	DRIVE ENABLED	ON	Drive Enable relay is closed.
		OFF	Drive Enable relay is open.

Artisan Technology Group - Quality Instrumentation ... Guaranteed | (888) 88-SOURCE | www.artisantg.com

Table 5.4 I/O MODULE STATUS INDICATOR DEFINITIONS (Continued)

MODULE	INDICATOR	STATUS	DEFINITION
ASCII/BASIC	BOARD OK	ON	Board has passed the self diagnostic test and is operating properly.
		OFF	Board has failed.
	BATTERY OK	ON	On-board Lithium battery voltage is within tolerance.
		FLASH	Battery voltage is low. Replace battery.
		OFF	Lithium battery voltage is too low and will not maintain the user program stored in CMOS RAM memory. Replace battery.
	REC 1	ON OFF	Serial data present at receiver 1 input. Receiver 1 input inactive
	TRANS 1	ON OFF	Serial data present - transmitter 1 output Transmitter 1 output inactive.
	REC 2	ON OFF	Serial data present at receiver 2 input. Receiver 2 input inactive.
	TRANS 2	ON OFF	Serial data present - transmitter 2 output Transmitter 2 output inactive.

I/O RACK CONNECTIONS

When troubleshooting the I/O system it is important to understand the interconnection of I/O racks and stations. Refer to the following illustrations of CPU to I/O rack connections, I/O rack to I/O rack connections and a typical I/O rack wiring scheme for proper cable connections and cable length guidelines. Be sure that all cables are connected to the proper modules and are secure.

ALL limitations pertaining to distance between racks and stations must be followed, otherwise unpredictable operation of the programmable control system may occur.

Artisan Technology Group - Quality Instrumentation ... Guaranteed | (888) 88-SOURCE | www.artisantg.com

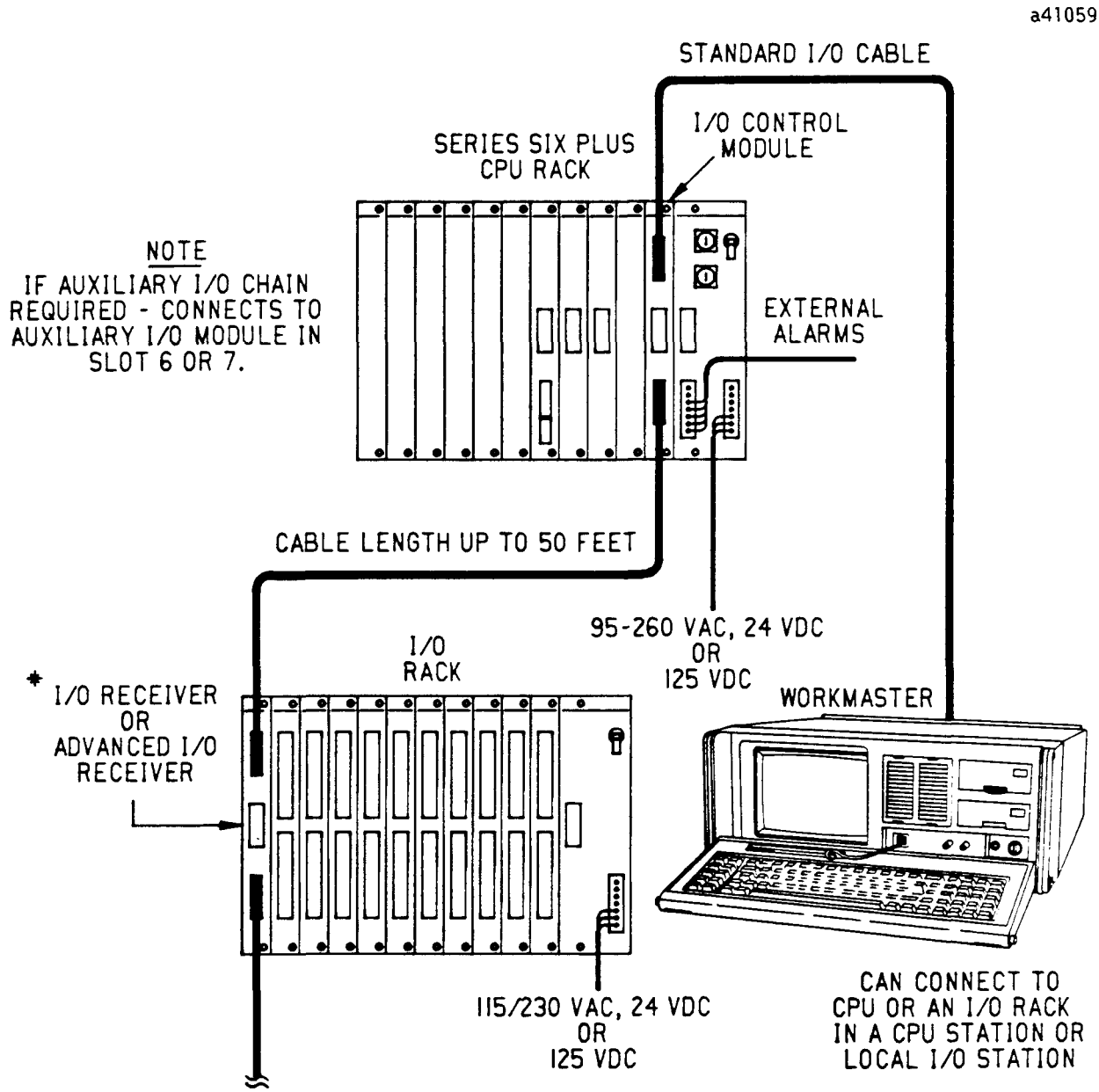

Figure 5.9 CPU TO I/O RACK CONFIGURATION

Artisan Technology Group - Quality Instrumentation ... Guaranteed | (888) 88-SOURCE | www.artisantg.com

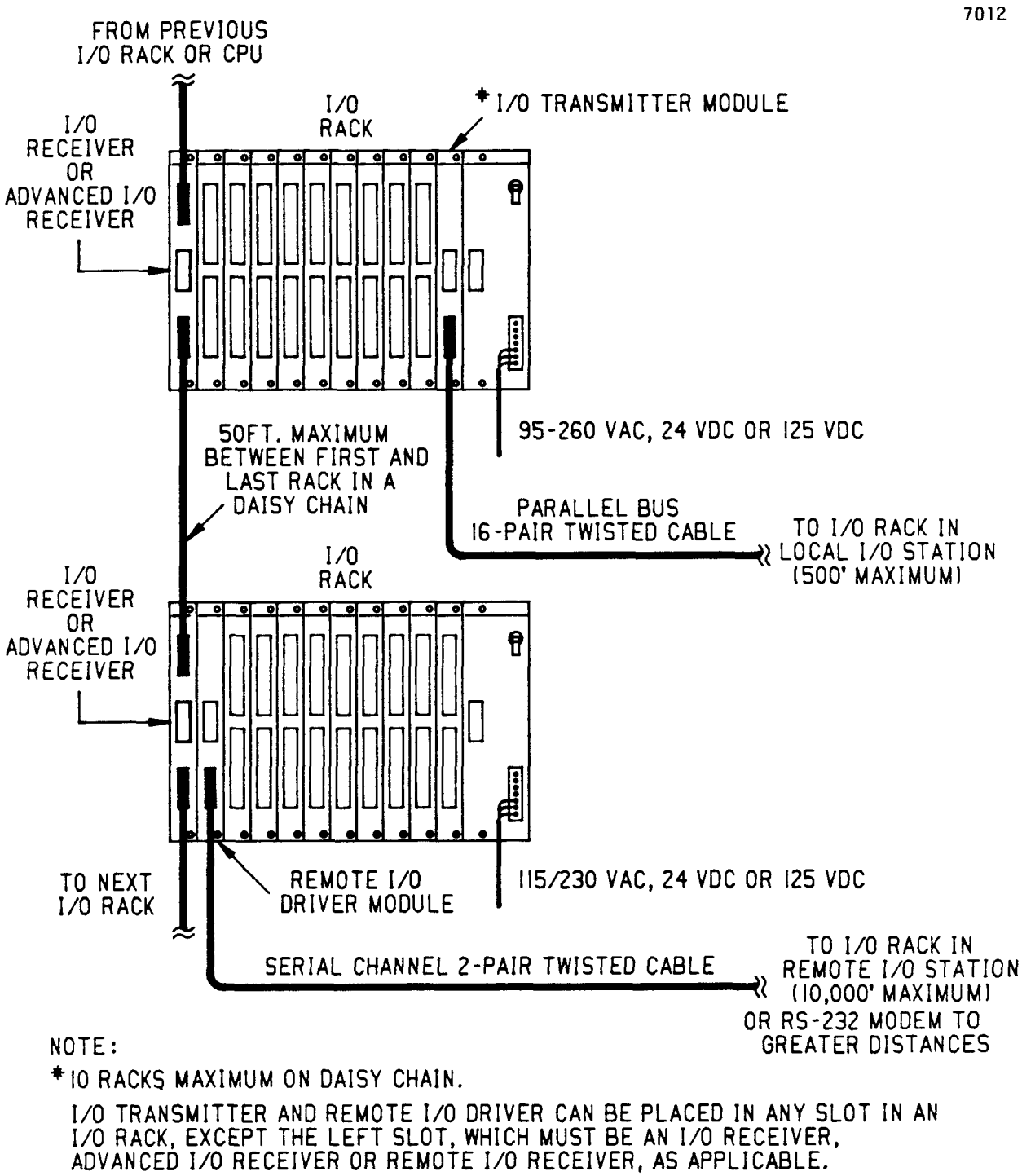

Figure 5.10 I/O RACK TO I/O RACK CONFIGURATION

Artisan Technology Group - Quality Instrumentation ... Guaranteed | (888) 88-SOURCE | www.artisantg.com

7013

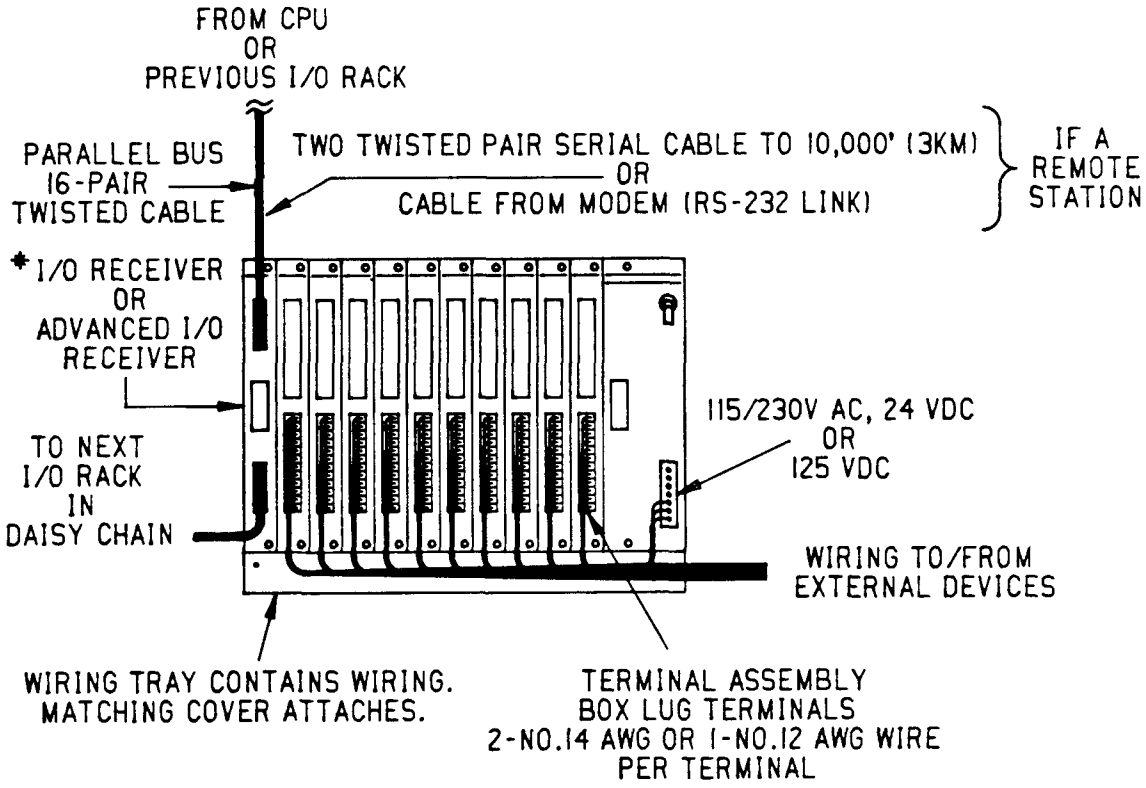

Figure 5.11 TYPICAL I/O RACK WIRING SCHEME

Artisan Technology Group - Quality Instrumentation ... Guaranteed | (888) 88-SOURCE | www.artisantg.com

SUGGESTED TROUBLESHOOTING SEQUENCES

Many problems are first identified by the failure of an input or output to operate properly. It is important in the initial stages of troubleshooting to take an overall look at the problem. The first step should be to check the condition of the status indicator lights in the I/O racks and the originating CPU where an apparent malfunction has occurred. The following steps provide a suggested troubleshooting sequence.

(1) Check at CPU.

- Condition of all status lights.
- If all the CPU status lights are on, proceed to step 11.
- If the CHAIN OK status light on the I/O Control module is on, but one or more of the other CPU status lights are off refer to the CPU troubleshooting section steps 1 through 12.
- If the CHAIN OK status light on the I/O Control module is off, a CHAIN OK or CHAIN PARITY problem is indicated. Proceed to step 11.
- Check the CPU station I/O racks, and Local I/O station and Remote I/O station racks for condition of the status lights.

(2) Observe the CHAIN OK light on the I/O Receiver or Advanced I/O receiver and I/O Transmitter modules.

Status	Definition
ON	I/O power is OK in this and all downstream racks and stations. Continuity is OK to all downstream stations.
OFF	A power or continuity problem has occurred. The CPU RUN and ENABLE lights also turn off. Alarm Number 1 relay switches.

Corrective Action

- Locate the last I/O rack in the I/O chain that has the CHAIN OK light off. Check I/O Receivers, Advanced I/O Receivers and I/O Transmitters.
- Check cable connections.
- Check circuit breaker (on the power supply).
- If Power status light is off, check ac (or dc) input and dc voltages. Refer to step 5.
- Replace the I/O Receiver or Advanced I/O Receiver.
- If there is an I/O Transmitter, replace it.
- Replace the I/O Receiver or Advanced I/O Receiver in the next I/O rack downstream in the I/O chain.

Artisan Technology Group - Quality Instrumentation ... Guaranteed | (888) 88-SOURCE | www.artisantg.com

(3) Observe the CHAIN PARITY light on the I/O Receiver or Advanced I/O receiver and I/O Transmitter modules.

Status	Definition
ON	Output parity is good in this rack and all links* connected to this rack.
OFF	Indicates that an output parity problem has been identified by an I/O Receiver or Advanced I/O Receiver module. The CHAIN OK light on the CPU I/O Control module is off. RUN and ENABLE lights at the CPU will also be off and Alarm Relay 1 switches.

Corrective Action

- Isolate the problem by following the CHAIN PARITY status indicators until a link* is found where CHAIN PARITY is off on an I/O Transmitter module, but is on in the I/O racks in the Local station it is driving.
- Locate the first I/O rack in that chain with the LOCAL PARITY light off.
- Ensure that there is good grounding between racks in that station (no more than ±7V between racks).
- Ensure that the low level I/O cable has not been placed close to any high level power cables, power supplies or switching devices.
- Replace the I/O Receiver or Advanced I/O Receiver in that rack.
- Replace the I/O chain interconnecting cable.
- Replace the I/O Transmitter driving the I/O station.

* A link is made up of an I/O Transmitter module, a 16-pair, twisted, shielded parallel bus I/O cable and one or more I/O Receiver or Advanced I/O Receiver modules.

(4) Observe the LOCAL PARITY light on the I/O Receiver or Advanced I/O Receiver modules.

Status	Definition
ON	Output parity is OK in this I/O rack.
OFF	Output parity error has been detected by the I/O Receiver module.

Corrective Action

- Ensure that there is good grounding between racks in that station.
- Ensure that the low level I/O cable has not been placed close to any high level power cables, power supplies or switching devices.
- Replace the I/O Receiver or Advanced I/O Receiver module.
- Replace the parallel chain I/O cable between this rack and the next rack upstream (back toward the CPU).
- Replace the I/O Transmitter or I/O Control module driving this station.

Artisan Technology Group - Quality Instrumentation ... Guaranteed | (888) 88-SOURCE | www.artisantg.com

(5) Observe the POWER light on the I/O power supply.

Status	Definition
ON	The voltage level of all dc voltages is within tolerance.
OFF	No ac or dc source voltage. The voltage level of any dc voltage is out of tolerance. The CHAIN OK light from this rack back to and including the CPU rack will be off. The RUN and ENABLE lights on the CPU are off and Alarm Number 1 relay switches.

Corrective Action

- Check the circuit breaker.
- Standard power supply - Ensure that the jumper to select either 115 or 230 V ac is correct and the ac voltage is present.
- For high capacity ac power supplies - check the ac power source. Voltage should be 95 to 260 V ac.
- For dc power supplies - check the dc power source. Voltage should be 20 to 32 V dc for the 24 V dc power supply or 100 to 150 V dc for the 125 V dc power supply.
- Partially remove the power supply module from its slot and measure the +5 V dc output in a standard supply. In a high capacity supply, also measure the +12 and -12 V dc output.

(6) Observe the ISOLATED POWER light on the I/O Transmitter module.

Status	Definition
OFF	Isolated +5 V dc bus is out of tolerance. CHAIN OK lights from this rack back to and including the CPU will turn off. RUN and ENABLE lights will turn off. Alarm Number 1 relay switches.

Corrective Action

- Replace the I/O Transmitter (if the POWER status light is off).
- If the POWER Status light is off, go back to step 5 and troubleshoot that problem first.

Artisan Technology Group - Quality Instrumentation ... Guaranteed | (888) 88-SOURCE | www.artisantg.com

(7) Observe the FAULT ENABLE light on the I/O Transmitter module (older versions do not have this light).

Status	Definition
ON	Board jumper set 2-3, CPU will stop if there is a fault on this link.
OFF	Board jumper set 1-2, CPU will not stop if there is a fault on this link.

No Corrective Action. Set the board jumper to the desired function.

(8) Observe the LOCAL OK light on Remote I/O Driver and Remote I/O Receiver.

Status	Definition
ON	This module is operating normally.
OFF	Problem exists in this module if light never comes on during power-up LED test or stays off at end of test.

Corrective Action

- Replace the Remote I/O Driver module.
- Replace the Remote I/O Receiver module.

(9) Observe the LINK OK light on Remote I/O Driver and Remote I/O Receiver modules.

Status	Definition
ON	Option jumpers on both the Remote Receiver and Remote Driver are identical and a communications link is established between the two modules.
OFF	Valid communications between Remote Driver and Remote Receiver not established. Baud rates different, serial parity sense different or some other option jumper not compatible.

Corrective Action

- Verify that all common circuit board option jumpers are set identical on both boards.
- Check cable connections at each end of link.
- If REMOTE OK and LINK OK lights turn off simultaneously, check for a power-down condition in the Remote I/O station rack containing the Remote I/O Receiver. Excessive noise on the link could also cause both lights to turn off.
- Replace Remote I/O Driver module.
- Replace Remote I/O Receiver module.

Artisan Technology Group - Quality Instrumentation ... Guaranteed | (888) 88-SOURCE | www.artisantg.com

(10) Observe the REMOTE OK light on Remote I/O Driver and Remote I/O Receiver modules.

Status	Definition
ON	Remote I/O Driver: Valid I/O data has been received from the Remote I/O Receiver. No I/O faults in the Remote I/O system. Remote I/O Receiver: No I/O faults, Remote system operating normally.
OFF	Fault exists in Remote I/O system.

Corrective Action

- Check for loose or improper connection between I/O cables connecting racks in the Remote I/O system.
- Ensure that all boards are seated properly in the Remote I/O system racks.
- If the REMOTE OK and LINK OK lights turn off simultaneously on the Remote I/O Driver, check for a break in the cable between the Remote I/O Driver and Remote I/O Receiver, excessive noise on the link or a power down condition in the rack containing the Remote I/O Receiver.
- If the status indicator light on the Remote I/O Receiver turns on, then off again almost immediately, check the DIP switch settings for I/O addresses assigned to I/O modules that are outside of the legal blocks of addresses that were assigned at the Remote I/O Driver.
- Replace the Remote I/O Receiver module.
- Replace the Remote I/O Driver module.

Artisan Technology Group - Quality Instrumentation ... Guaranteed | (888) 88-SOURCE | www.artisantg.com

(11) Observe the REMOTE PARITY light on the Remote I/O Driver and Remote I/O Receiver modules.

Status	Definition
ON	No parity errors in Remote I/O system.
OFF	Parity error detected in the Remote I/O system.

Corrective Action

- Clear parity error by switching the CPU from RUN to STOP and back to RUN.
- Replace Remote I/O Receiver if there is only one rack in the Remote system.
- If more than one rack in the Remote system, locate the first rack in the chain with the LOCAL PARITY light off.
- Replace the I/O Receiver or Advanced I/O Receiver in that rack.
- Replace the I/O chain cable.

If none of the status indicator lights are observed to be off in the CPU or I/O racks, you must determine what type of fault you are troubleshooting. If an input or output point is not working, go to the step corresponding to the following:

Step (12) - An input is not being recognized by the CPU.
Step (13) - Only one output on a board fails to operate.
Step (14) - No outputs are operating.
Step (15) - I/O status or override changes occur during I/O rack power-down.

If you have Advanced I/O Receiver modules in your I/O system, then proceed to steps 16 through 25. The additional troubleshooting aids provided on the Advanced I/O Receiver module ease the problems of troubleshooting intermittent fault conditions. Without Advanced I/O Receiver modules it can be very difficult to troubleshoot intermittent faults.

Examples of Intermittent Fault Conditions and Causes

Condition - Program has lost all Sealed relays (those relays that use their own contact state to retain them in the ON state).

Cause - Power was momentarily lost in a power supply somewhere in the system. The cause could be an operator cycling a power switch, loose connection on a power supply or I/O cable in the system, etc.

Condition - Your program has just sensed a fault of some type and warned an operator that something in the system is not correct (for example, a fault other than the normal operating program might detect).

Cause - Input or output parity retried once and reported by CPU Version 105 or higher software or indicated by status indications at an Advanced I/O Receiver module (for example, loose or incorrect I/O cable connections, poor or incorrect grounding procedures between racks in an I/O system, etc.).

Artisan Technology Group - Quality Instrumentation ... Guaranteed | (888) 88-SOURCE | www.artisantg.com

(12) An input is not being recognized by the CPU.

Corrective Action

- If an Advanced I/O Receiver is used in the I/O rack, make sure that it is set up to return inputs to the CPU (refer to Data sheet GEK-90771)
- Make sure that the input is not overridden.
- Ensure that the correct voltage level for the type of input is being supplied to the input terminal assembly.
- Verify that two input boards are not addressed the same.

- If the input status indicator (LED) is not on.
  1. Reseat the terminal assembly.
  2. Check wiring connections.
  3. Replace the input board.

- If the input status indicator (LED) is on.
  1. Reseat the input board.
  2. Check the input number starting point selection on the DIP switch adjacent to the input board (DIP switch mounted on motherboard). The starting point selected for this input module must agree with the user program.
  3. Replace the I/O Receiver or Advanced I/O Receiver, as applicable.
  4. Replace the Input board.
  5. Replace the I/O cable.

(13) Only 1 output on a board fails to operate.

Corrective Action

- Make sure that the output is not overridden.
- Check wiring for that output.
- Check for a blown fuse.
- Reseat the output board.
- Replace the output board.

(14) No outputs are functioning

Corrective Action

- Make sure that the outputs are not overridden.
- If an Advanced I/O Receiver is used in the I/O rack, make sure that it is set up to allow outputs to operate normally (refer to Data sheet, GEK-90771).

- If the problem is limited to 1 board.
  1. Check the I/O point selection DIP switches.
  2. Reseat the board.
  3. Check terminal assembly wiring.
  4. Check terminal assembly voltage. Ensure it is proper for the module.
  5. Replace the output board.
  6. Replace the I/O cable.

Artisan Technology Group - Quality Instrumentation ... Guaranteed | (888) 88-SOURCE | www.artisantg.com

- If one I/O rack has no functioning outputs.
  1. If outputs further up the I/O chain (towards the CPU) function, replace the I/O Receiver (or Advanced I/O Receiver) in this rack.
  2. Pull out all I/O boards and reinsert one at a time.
  3. Replace the I/O cable.

- If there are no functioning outputs in any of the I/O racks.
  1. Check the condition of the CPU status indicator lights.
  2. If any CPU status light is off, troubleshoot that problem.
  3. If all CPU status lights are on, replace the I/O Control board in the CPU.
  4. If problem is in the Auxiliary I/O chain and all CPU status lights are on, replace the Auxiliary I/O board in the CPU.
  5. Replace the I/O cable.

(15) I/O status change or override change during I/O rack power-down.

Corrective Action

- Check the position of the jumper pack and DIP shunts on the I/O Receiver (or Advanced I/O Receiver) modules. Refer to I/O Receiver and Advanced I/O Receiver installation instructions in Chapter 3 for correct positions.

TROUBLESHOOTING WITH THE ADVANCED I/O RECEIVER MODULE

The rest of the troubleshooting procedures pertain to the Advanced I/O Receiver. The numbers 16 - 25 refer to status indicators on the module as shown in figure 5.12 and also correspond to troubleshooting steps.

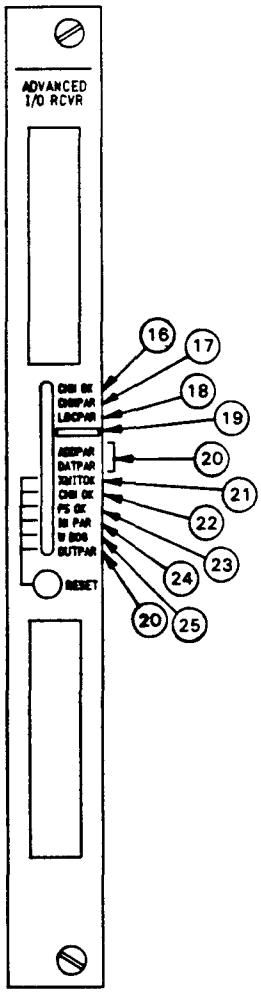

a41083

Figure 5.12 ADVANCED I/O RECEIVER STATUS INDICATORS

Artisan Technology Group - Quality Instrumentation ... Guaranteed | (888) 88-SOURCE | www.artisantg.com

(16) The following troubleshooting procedures assume that the Advanced I/O Receiver option switches have been set to send faults back to the CPU. If the faults are not sent back to the CPU, the CPU will not be affected by these faults.

CHN OK 16	XMIT OK 21	CHN OK 22	PS OK 23	Definition
ON	ON	ON	ON	Power and cable continuity is and has been OK in: This I/O rack I/O racks downstream from this Advanced I/O Receiver. Any I/O Transmitter or Remote I/O Driver link beginning in this rack (since the Advanced I/O Receiver was last reset).
OFF	OFF	ON	ON	A power or continuity problem exists now in the I/O Transmitter or Remote I/O Driver link. The CHAIN OK light on the CPU's I/O Control module will be off, RUN and ENABLE lights at the CPU will be off and Alarm Relay 1 switches.
OFF	ON	OFF	ON	A power or continuity problem exists now in one or more of the I/O racks connected to the lower connector on this module. The CHAIN OK light on the CPU's I/O Control module will be off, RUN and ENABLE lights at the CPU will be off and Alarm Relay 1 switches.
OFF	ON	ON	OFF	A power or continuity problem exists now in this I/O rack. The CHAIN OK light on the CPU's I/O Control module will be off, RUN and ENABLE lights at the CPU will be off and Alarm Relay 1 switches.

Corrective Action

16 and 21 OFF

- Locate the last I/O rack in the I/O Transmitter or Remote I/O Driver link beginning in this rack, that has the CHN OK (16) light off. Examine the other status indicators (22 and 23) in that rack and go to the corrective action corresponding to those lights.

16 and 22 OFF

- Locate the last I/O rack in the chain connected to the lower connector on this Advanced I/O Receiver module. If the I/O rack connected to that connector has all of the status indicator lights ON, replace the cable between the two racks.
- Replace the Advanced I/O Receiver in this rack.
- Replace the Advanced I/O Receiver in the downstream rack.

Artisan Technology Group - Quality Instrumentation ... Guaranteed | (888) 88-SOURCE | www.artisantg.com

16 and 23 OFF

- Check the POWER light on the power supply in this rack, if off go back to step 5.
- Reseat the Advanced I/O Receiver module in this rack.
- Replace the Advanced I/O receiver module in this rack.

CAUTION

Be careful not to touch any high voltage wires or connectors. When in doubt - unplug the power supply.

- Replace the power supply in this rack.
- Replace this I/O rack.

Once the problem has been determined and corrected, push the RESET button on the Advanced I/O Receiver or momentarily turn Output Byte Bit 2 On then OFF.

(17) CHAIN PARITY LIGHT

STATUS	DEFINITION
ON	Output Parity is good in this rack and all links connected to this rack.
OFF	Indicates that an output parity problem has been identified by an I/O Receiver module., The CHAIN OK light on the CPU's I/O Control module is off, RUN and ENABLE lights at the CPU will be off, and Alarm Relay 1 switches.

Corrective Action

- Isolate the problem by following the CHN PAR status indicators until a link is found where CHAIN PARITY is off on an I/O Transmitter module, but is on in the I/O racks in the Local station it is driving.
- Locate the first I/O rack in that chain with the LOC PAR light off.
- Ensure good grounding between racks in that station (no more than ± 7V between racks).
- Ensure that the low level I/O cable has not been placed close to any high level power cables, power supplies or switching devices.
- Replace the I/O Receiver in that rack.
- Replace the I/O chain interconnecting cable.
- Replace the I/O Transmitter or Remote I/O Driver that is driving the I/O station.

Artisan Technology Group - Quality Instrumentation ... Guaranteed | (888) 88-SOURCE | www.artisantg.com

(18) LOCAL PARITY LIGHT

STATUS	DEFINITION
ON	Output parity is OK in this I/O rack.
OFF	Output parity has been detected by this Advanced I/O Receiver module. The CHAIN OK light on the CPU's I/O Control module will be off, RUN and ENABLE lights at the CPU will be off, and Alarm Relay 1 switches

Corrective Action

- Check the other status indicators referenced in step 20 (ADDPAR, DATPAR, OUTPAR) in combination with the LOCPAR light and go to step number 20.

(19) You are at this step because there is no apparent fault indicated by the status indicators on the CPU and/or light 19 is off or flashing.

STATUS	DEFINITION
ON	Output Byte Bit 3 is a logic 0.
OFF or FLASHING	Output Byte Bit 3 is a logic 1 or is toggling.

Corrective Action

- If light number 19 is OFF or flashing the program in the CPU has told it to do this and you must determine why the program did so. The documentation associated with your program should explain what controls this light. Status indicators 20 through 25 may also be used to determine what the fault is or was.

  Indicator light 19 is controlled by Bit 3 of the Advanced I/O Receiver output byte. Determine the address of that byte by checking the DIP switch setting on the module (refer to Data Sheet GEK-90771, page 3, call out 7).

Example of Determining the Output Byte Address

If the DIP Switch for the Output address has all switches closed, then the output byte begins at Output 00001. This means bit 3 is Output 00003 and you must search for 00003 in the Ladder diagram to find out why it is off or flashing.

- If light number 19 is ON, as well as all the status indicators on the CPU, then the fault which brought you to this step is most likely an intermittent fault. Examine status indicators 20 through 25 on all Advanced I/O Receivers to determine what the fault was.

Artisan Technology Group - Quality Instrumentation ... Guaranteed | (888) 88-SOURCE | www.artisantg.com

(20) All three of the status indicators (ADDPAR, DATPAR, and OUTPAR) deal with output parity. ADDPAR and DATPAR indicate during which part of the output cycle the parity occurred. OUTPAR is latched OFF if there is an error. ADDPAR and DATPAR are reset if the CPU is running and will be ON.

LOCPAR	ADDPAR	DATPAR	OUTPAR	DEFINITION
ON	ON	ON	ON	Output parity is and has been OK in this rack since the Advanced I/O Receiver was last reset.
OFF	OFF	ON	OFF	Output parity has been detected during the address part of the output cycle. The CHAIN OK light on the CPU's I/O Control module will be off, RUN and ENABLE lights at the CPU will be off and Alarm Relay 1 switches.
OFF	ON	OFF	OFF	Output parity has been detected during the data part of the output cycle. The CHAIN OK light on the CPU's I/O Control module will be off, RUN and ENABLE lights at the CPU will be off and Alarm Relay 1 switches.
ON	ON	ON	OFF	Intermittent parity was detected and latched but CPU retry corrected the parity error, or CPU was restarted after output parity error shutdown and the OUTPAR light has not been reset since then.

Corrective Action

- Ensure that good grounding exists between racks in that station (no more than ±7V between racks, especially when intermittent faults occur).
- Ensure that the low level I/O cable has not been placed close to any high level power cables, power supplies, or switching devices (especially when intermittent faults occur).

- Replace the Advanced I/O Receiver module.
- Replace the I/O cable between this rack and the next rack upstream (back towards the CPU).
- Replace the I/O Receiver, Advanced I/O Receiver, I/O Transmitter, Remote I/O Driver, or I/O Control module driving this rack.

NOTE

Reset the status indicators after your corrective action by momentarily pressing the RESET pushbutton on the Advanced I/O Receiver module or by momentarily turning Output Byte Bit 2 On then OFF.

Artisan Technology Group - Quality Instrumentation ... Guaranteed | (888) 88-SOURCE | www.artisantg.com

(21) TRANSMIT OK LIGHT

CHN OK 16	XMIT OK 21	DEFINITION
ON	ON	Power and cable continuity is and has been OK in all I/O racks connected to an I/O Transmitter or Remote I/O Driver module in this rack since the last time that the Advanced I/O Receiver was reset.
ON	OFF	An intermittent power or continuity problem was latched in from the I/O Transmitter or Remote I/O Driver link and the XMIT OK light has not been reset since then.
OFF	OFF	A power or continuity problem exists now in the I/O Transmitter or Remote I/O Driver link. The CHAIN OK light on the CPU's I/O Control module will be off, RUN and ENABLE lights at the CPU will be off and Alarm Relay 1 switches.

Corrective Action

- If status indicator 16 is OFF, go to step number 16.
- If only status indicator 21 is OFF, then the problem is intermittent and several causes must be investigated.

  Typical Causes: (All in the I/O Transmitter or Remote I/O Driver link.)

  1. Someone momentarily shut off one or more I/O rack power supply switches then turned them back ON.
  2. Loss of power to one or more of the I/O racks (for example, utility drop in service or power below specifications).
  3. Loose power connections to the I/O rack power supply or between the power supply and the I/O rack backplane.
  4. Loose or damaged I/O cable between I/O racks.
  5. Loose or damaged I/O cable connector on the I/O cable or on the connector on the module to which it is connected.

- Once the suspected cause has been determined, correct it and push the RESET button on the Advanced I/O Receiver or momentarily turn Output Byte Bit 2 ON then OFF.

Artisan Technology Group - Quality Instrumentation ... Guaranteed | (888) 88-SOURCE | www.artisantg.com

(22) CHAIN OK LIGHT

CHN OK 16	CHN OK 22	DEFINITION
ON	ON	Power and cable continuity is and has been OK in all I/O racks downstream from this Advanced I/O Receiver since the last time that the Advanced I/O Receiver was reset.
ON	OFF	An intermittent power or continuity problem was latched in from one or more of the I/O racks connected to the lower connector of the Advanced I/O Receiver and the CHN OK light has not been reset since then.
OFF	OFF	A power or continuity problem exists now in one or more of the I/O racks connected to the lower connector of this Advanced I/O Receiver. CHAIN OK light on CPU's I/O Control module will be off, RUN and ENABLE lights at the CPU will be off and Alarm 1 relay switches.

Corrective Action

- If status indicator 16 is OFF, go to step number 16.
- If only status indicator 22 is OFF, then the problem is intermittent and several possible causes must be investigated.

Typical Causes: (In one or more of the I/O racks connected to the lower connector of this Advanced I/O Receiver.)

1. Someone momentarily shut off one or more I/O rack power supply switches then turned them back ON.
2. Loss of power to one or more of the I/O racks (for example, utility drop in service or power below specifications).
3. Loose power connections to the I/O rack power supply or between the power supply and I/O rack backplane.
4. Loose or damaged I/O cable between I/O racks.
5. Loose or damaged I/O cable connector on the I/O cable or on the connector on the module to which it is connected.

CAUTION

Be careful not to touch any high voltage wires or connectors. When in doubt - unplug the power supply.

- Try to force a failure by gently moving cables and connectors.
- Ensure good connections at all terminal boards and plug-on wire connectors. Be sure the wires are connected correctly.
- Once the suspected cause has been determined and corrected push the RESET button on the Advanced I/O Receiver or momentarily turn Output Byte Bit 2 On then back OFF.

Artisan Technology Group - Quality Instrumentation ... Guaranteed | (888) 88-SOURCE | www.artisantg.com

(23) POWER SUPPLY OK LIGHT

CHN OK 16	PS OK 23	DEFINITION
ON	ON	Power and continuity is and has been OK in this I/O rack since this Advanced I/O Receiver was last reset,
ON	OFF	An intermittent power or continuity problem was latched in from the power supply or from loose connections in this I/O rack.
OFF	OFF	A power or continuity problem exists now in this I/O rack. The CHAIN OK light on the CPU's I/O Control module will be off, the RUN and ENABLE lights at the CPU will be off and Alarm relay 1 switches.

Corrective Action

- Check the POWER light (step 5) on the power supply in this rack and if it is OFF go back to step 5.
- If status indicator 16 is OFF, go to step number 16.
- If only status indicator 23 is OFF, then the problem is intermittent and several possible causes must be investigated.

  Typical Causes: (In this I/O rack only.)

  1. Someone momentarily shut off the I/O rack power supply switch then turned it back ON.
  2. Loss of power to the I/O rack (for example, utility drop in service or power below specification).
  3. Loose power connections to the I/O rack power supply or between the power supply and the I/O rack backplane.
  4. Advanced I/O Receiver module not seated correctly.

CAUTION

Be careful not to touch any high voltage wires or connectors. When in doubt - unplug the power supply.

- Try to force a failure by gently moving cables and connectors.
- Ensure good connections at all terminal boards and plug-on wire connectors. Be sure the wires are connected correctly.
- Once the suspected cause has been determined and corrected push the RESET button on the Advanced I/O Receiver or momentarily turn Output Byte Bit 2 On then OFF.

Artisan Technology Group - Quality Instrumentation ... Guaranteed | (888) 88-SOURCE | www.artisantg.com

(24) INPUT PARITY LIGHT

INPAR 24	WDOG 25	DEFINITION
ON	ON	Input data parity coming from all downstream racks (if their switch 6 is closed and this rack's switch 7 is closed) is and has been OK since this Advanced I/O Receiver was last reset.
OFF	ON	An intermittent parity error was latched in from a downstream rack (if their switch 6 is closed and this rack's switch 7 is closed). The parity error was not present long enough to stop the CPU.
OFF	OFF	A parity problem exists now downstream from this rack (if their switch 6 is closed and this rack's switch 7 is closed). At the CPU the RUN light will be off, the ENABLED and PARITY lights on the I/O Control module will be off and Alarm Relay 1 on the CPU switches.

Corrective Action

If status indicators 24 and 25 are both OFF: (The first 4 listed actions should have been performed before any system start up.)

- Verify that no two input boards have the same address.
- Connect any unused Analog Input Channels to the SHD terminal on their respective faceplates.
- Ensure that good grounding exists between racks in that station (no more than ±7V between racks, especially with intermittent faults).
- Ensure that the low level I/O cable has not been placed close to any high level power cables, power supplies, or switching devices (especially with intermittent faults).
- Turn the CPU key switch to STOP, then power the CPU down and back up.
- If an Input parity error was detected by the CPU, then the second byte (the center byte) of the CPU flags will contain the address from which the parity error was received (CPU flag decoding is done with the Workmaster computer through Logicmaster 6 software).

Artisan Technology Group - Quality Instrumentation ... Guaranteed | (888) 88-SOURCE | www.artisantg.com

- Determine the address of the Input board by observing the Scratch Pad CPU Flags and replace the Input board corresponding to the address shown in the Scratch Pad.
- Replace the parallel chain I/O cable between this rack and the next downstream rack (connected to the bottom of this board).
- Replace this Advanced I/O Receiver module.
- Replace the I/O Receiver or Advanced I/O Receiver module in the next downstream rack.
- Reset the status indicators after your corrective action by momentarily pressing the RESET pushbutton on the Advanced I/O Receiver module.

If only status indicator 24 (INPAR) is OFF then the problem is intermittent and several possible causes must be investigated.

Typical Causes: (In this I/O rack if switch 6 is closed or in downstream racks if their switch 6 is closed and this rack's switch 7 is closed.

1. More than one Input board at the same address.
2. Floating Analog Input Channels (remember there are 8 Channels per board and if any Channels are unused they should be connected to the SHD terminal on the faceplate).
3. Poor grounding between local I/O racks (for example, intermittent ground surges causing parity errors).
4. Loose or damaged I/O cable between I/O racks.

- Verify that no two Input boards have the same address.
- Ensure that good grounding exists between racks in that station (no more than ±7 V between racks, especially with intermittent faults).
- Ensure that the low level I/O cable has not been placed close to any high level power cables, power supplies, or switching devices (especially with intermittent faults).
- Replace the parallel chain I/O cable between this rack and the next downstream rack (connected to the bottom of this board).
- Replace this Advanced I/O Receiver module.
- Replace the I/O Receiver or Advanced I/O Receiver module in the next downstream rack.
- Reset the status indicators after your corrective action by momentarily pressing the RESET pushbutton on the Advanced I/O Receiver module.

Artisan Technology Group - Quality Instrumentation ... Guaranteed | (888) 88-SOURCE | www.artisantg.com

(25) W DOG (WATCHDOG) LIGHT

STATUS	DEFINITION
ON	The CPU has power and has been active without fatal I/O parity errors since the W DOG light was last reset.
OFF	The Advanced I/O Receiver did not communicate with the CPU for a period of 1 second since the last time the light was reset. The CPU is not active due to the power supply being turned off, or there is or has been a fatal I/O parity error, or any CPU fault.

Corrective Action

- If any of the other status indicators on this Advanced I/O Receiver are off, proceed to the step number associated with that indicator.
- If any of the status indicators on the CPU are off, proceed to the step associated with that indicator.
- If only status indicator 25 is off, then the problem is intermittent and several possible causes must be investigated.

  Typical Causes:

  1. Someone momentarily shut off power to the CPU power supply then turned it back ON.
  2. Loss of power to one or more of the I/O Transmitters driving a link* to this rack (for example, utility drop in service or power below specifications).
  3. Loose or damaged I/O cable between I/O racks upstream (back toward the CPU).
  4. Loose or damaged I/O cable connector on the I/O cable or on the connector on the module to which it is connected.

CAUTION

Be careful not to touch any high voltage wires or connectors. When in doubt - unplug the power supply.

- Try to force a failure by gently moving cables and connectors.
- Be sure that power is not turned off at the CPU or any I/O rack that has an I/O Transmitter driving a link* to this I/O rack.
- Once the suspected cause has been determined and corrected, push the RESET button on the Advanced I/O Receiver or momentarily turn Output Byte Bit 2 ON and then back OFF.

  * A link is made up of an I/O Transmitter module, a 16-twisted pair shielded parallel bus I/O cable and one or more I/O Receivers or Advanced I/O Receivers.

Artisan Technology Group - Quality Instrumentation ... Guaranteed | (888) 88-SOURCE | www.artisantg.com

APPENDIX A
GLOSSARY OF TERMS

Address – A series of decimal numbers assigned to specific program memory locations and used to access those locations. In the Series Six Plus, the addresses can range from 0000 to a maximum of 65534.

Analog – A numerical expression of physical variables such as rotation and distance to represent a quantity.

AND – An operation that places two contacts or groups of contacts in series. All contacts in series control the resultant status.

ASCII – An 8-level code (7 bits plus 1 parity bit) commonly used for exchange of data which is the American Standard Code for Information Interchange.

Backplane – A group of connectors physically mounted at the back of a rack so that printed circuit boards can be mated to them. The connectors are interconnected by wire wrapping.

Baud - A unit of data transmission speed equal to the number of code elements (bits) per second.

BCD (Binary Coded Decimal) – A 4-bit system in which individual decimal digits (0 through 9) are represented by 4-bit binary numerals; for example, the number 43 is represented by 0100(4) 001 1(3) in the BCD notation.

Binary – A numbering system that uses only the digits 0 and 1. This system is also called base 2.

Bit – The smallest unit of memory. Can be used to store only one piece of information that has two states (for example, a One/Zero, On/Off, Good/Bad, Yes/No, etc.). Data that requires more than two states (for example, numerical values 000-999) will require multiple bits.

Bus – An electrical path for transmitting and receiving data.

Byte – A group of binary digits operated on as a single unit. In the Series Six Plus PLC, a byte is made up of 8 bits.

CHECK Light – An LED indicator on the Arithmetic Control module which, when on, indicates that the execution sequence is normal and the self-test routine has passed at least once every 200 milliseconds, +/-50 milliseconds.

CMOS – An acronym for Complementary Metal Oxide Semiconductor. A read/write memory that has a low power consumption but requires a battery in order to retain its content upon loss of power.

CPU (Central Processing Unit) – The central device or controller that interprets user instructions, makes decisions and executes the functions based on a stored program. This program specifies actions to be taken to all possible inputs.

Artisan Technology Group - Quality Instrumentation ... Guaranteed | (888) 88-SOURCE | www.artisantg.com

CPU Station - An I/O system consisting of a maximum of 10 I/O racks daisy chained on the parallel I/O bus through the I/O Control module (or Auxiliary I/O module in an Auxiliary I/O chain) to an I/O Receiver or Advanced I/O Receiver located in the rack nearest to the CPU rack. The last rack can be no more than 50 feet from the CPU.

Counter – A function within the PLC that records- events based upon the On/Off transition of a signal. A coil associated with the counter is energized at a user determined preset value.

DIP Switch - An acronym for Dual-In-Line Package, which is a group of miniature toggle or slide switches arranged side-by-side in a single package. Commonly used as the physical device for setting the configuration of various parameters necessary to the operation of electronic equipment.

Data Link - The equipment including interface modules and cables that allow transmission of information.

Discrete - Consisting of individual, distinct things such as bits, characters or circuit components. Also refers to On/Off type of t/O modules.

Field Devices – User supplied devices typically providing information to the PLC (Inputs: pushbutton, limit switches, relay contacts, etc.) or performing PLC tasks (Outputs: motor starters, solenoids, indicator lights, etc.).

Firmware – A series of instructions contained in ROM (Read Only Memory) which are used for internal processing functions only. These instructions are transparent to the user.

Hardware - All of the mechanical, electrical and electronic devices that comprise the Series Six Plus programmable controller and its application(s).

Hardwired - Interconnection of electrical and electronic devices directly through physical wiring.

Hexadecimal – A numbering system, having 16 as a base, represented by the digits 0 through 9, then A through F.

Input - A signal, typically ON or OFF, that provides information to the PLC. Inputs are **usually** generated by devices such as limit switches and pushbuttons.

Input Module – An I/O module that converts signals from user devices to logic levels used **by the** CPU.

Interface - To connect a programmable logic controller with its application devices, communications channels, and peripherals through various modules and cables.

I/0 (Input/Output) - That portion of the PLC to which field devices are connected. Isolates the CPU from electrical noise.

I/O Electrical isolation – A method of separating field wiring from logic level circuitry. Typically accomplished through the use of optical isolation devices.

I/O Module – A printed circuit assembly that interfaces between user devices and the Series Six Plus programmable logic controller.

Artisan Technology Group - Quality Instrumentation ... Guaranteed | (888) 88-SOURCE | www.artisantg.com

I/O Scan – A method by which the CPU monitors all inputs and controls all outputs within a prescribed time.

K– An abbreviation for kilo or exactly 1024 in the world of computers. Usually related to 1024 words of memory.

LED – An acronym for Light-Emitting-Diode, which is a solid state device commonly used as a visual indicator in electronic equipment.

Ladder Diagram – A representation of control logic relay systems. The user programmed logic is expressed in relay equivalent symbology.

Latch – A PLC function that causes a coil to stay on and remain on even if power or the input is removed. Referred to as a retentive function.

Local I/O Station – An I/O system configuration consisting of a maximum of 10 I/O racks interfaced to a Series Six Plus programmable logic controller through an I/O Receiver or Advanced I/O Receiver module to an I/O Transmitter module in a CPU station or another Local I/O station. The last Local I/O station in a chain can be located up to a maximum of 2000 feet from the originating I/O Control or Auxiliary I/O module in a CPU station.

Logic – A fixed set of responses (outputs) to various external conditions (inputs). All possible situations for both synchronous and non-synchronous activity must be specified by the user. Also referred to as the program.

Logic Memory – In the Series Six Plus PLC, dedicated CMOS RAM memory accessible by the user for storage of user ladder diagram programs.

Memory – A grouping of physical circuit elements that have data entry, storage and retrieval capability.

Memory Protect – A hardware capability that prevents user memory from being altered by an external device. This capability is controlled by a key switch on the CPU power supply.

Microprocessor – An electronic computer processor section consisting of integrated circuit chips that contain arithmetic, logic, register, control and memory functions.

Microsecond (us) – One millionth of a second. 1×10^{-6} or 0.000001 second.

Millisecond (ms) – One thousandth of a second. 1×10^{-3} or 0.001 second.

Mnemonic – An abbreviation given to an instruction, usually an acronym formed by combining initial letters or parts of words.

Modules – A replaceable electronic subassembly usually plugged in and secured in place but easily removable in case of fault or system redesign. In the Series Six Plus PLC , a combination of a printed circuit board and its associated faceplate which when combined form a complete assembly.

Nanosecond (ns) – One billionth of a second. 1×10^{-9} or 0.000000001 second.

Noise – Undesirable electrical disturbances to normal signals, generally of high frequency content.

Artisan Technology Group - Quality Instrumentation ... Guaranteed | (888) 88-SOURCE | www.artisantg.com

Non-Retentive Coil – A coil that will go off when power is removed.

Non-Volatile Memory – A memory capable of retaining its stored information under no-power conditions (power removed or turned off).

OFF-Line – Equipment or devices that are not connected to a communications line; for example, the Workmaster computer, when off-line, operates independent of the Series Six Plus CPU.

ON-Line - Descriptive of equipment or devices that are connected to the communications line.

OR – An operation that places two contacts or groups of contacts in parallel. Any of the contacts can control the resultant status.

Optical Isolation – Use of a solid state device to isolate the user input and output devices from internal circuitry of an I/O module and the CPU.

Opto-Isolator – A semiconductor device that isolates input or output circuits from the control circuitry on an I/O module. These circuits are coupled together by transmission of light energy from a sender (LED) to a receiver (photo-isolator).

Outputs – A signal typically ON or OFF, originating from the PLC with user supplied power, that controls external devices based upon commands from the CPU.

Output – Information transferred from the CPU, through a module for level conversion, for controlling an external device or process.

Output Devices – Physical devices such as motor starters, solenoids, etc. that receive data from the programmable logic controller.

Output module – An I/O module that converts logic levels within the CPU to a usable output signal for controlling a machine or process.

PLC – Commonly used abbreviation for Programmable Logic Controller.

Parity – The anticipated state, either odd or even, of a set of binary digits.

Parity Bit – A bit added to a memory word to make the sum of the bits in a word always even (even parity) or always odd (odd parity).

Parity Check – A check that determines whether the total number of ones in a word is odd or even.

Parity Error – A condition that occurs when a computed parity check does not agree with the parity bit.

Peripheral Equipment - External units that can communicate with a PLC, for example, programmers, printers, etc.

Preset – A numerical value specified in a function which establishes a limit for a counter or timer. A coil will energize when this value is reached.

Program – A sequence of functions entered into a programmable logic controller to be executed by the processor for the purpose of controlling a machine or process.

Artisan Technology Group - Quality Instrumentation ... Guaranteed | (888) 88-SOURCE | www.artisantg.com

Programmable Logic Controller or Programmable Controller - A solid-state industrial control device which receives inputs from user supplied control devices such as switches and sensors, implements them in a precise pattern determined by ladder diagram based programs stored in the user memory, and provides outputs for control of processes or user supplied devices such as relays and motor starters.

Programmer - A device for entry, examination and alteration of the PLC's memory, including logic and storage areas.

PROM - An acronym for Programmable Read Only Memory. A retentive digital device programmed at the factory and not readily alterable by the user.

RAM - An acronym for Random Access Memory. A solid-state memory that allows individual bits to be stored and accessed. This type of memory is volatile; that is, stored data is lost under no power conditions, therefore a battery backup is required. The Series Six Plus PLC uses a Lithium Manganese Dioxide battery or an optional external back-up battery for this purpose.

RS-232C - A standard specified by the Electronics Industries Association (EIA) for the mechanical and electrical characteristics of the interface for connecting Data Communications Equipment (DCE) and Data Terminal Equipment (DTE).

RUN Light - An LED indicator on the Arithmetic Control module which, when on, indicates that the execution sequence of the PLC is proceeding normally and the I/O scan is completed at least once every 200 milliseconds, +/-50 milliseconds.

Read - To have data entered from a storage device.

Reference - A number used in a program that tells the CPU where data is coming from or where to transfer the data.

Register Memory - In the Series Six Plus PLC, dedicated CMOS RAM memory accessible by the user for data storage and manipulation.

Relay Line - A line of logic in a ladder diagram used to simulate the effect of mechanical relays. The coil in a relay line is energized when continuity is complete from the left to right vertical rail of a ladder diagram.

Remote I/O Station - An I/O system configuration allowing access to a maximum of 248 inputs and 248 outputs at a location distant from a CPU station or Local I/O station. Connection is made through a serial communications interface consisting of a Remote I/O Driver, a two-twisted pair shielded cable, and a Remote I/O Receiver. The serial link can be located up to 10,000 feet from the originating Remote I/O Driver. When used with an RS-232C modem communications link, the distance is virtually unlimited.

Retentive Coil - A coil that will remain in its last state, even though power has been removed.

Rung - A sequence or grouping of PLC functions that control one coil. One or more rungs form a ladder diagram.

Scan - The technique of examining or solving all logic steps specified by the program in a sequential order from the first step to the last.

Artisan Technology Group - Quality Instrumentation ... Guaranteed | (888) 88-SOURCE | www.artisantg.com

Serial Communication - A method of data transfer within a PLC, whereby the bits are handled sequentially rather than simultaneously as in parallel transmission.

Significant Bit – A bit that contributes to the precision of a number. The number of significant bits is counted beginning with the bit contributing the most value, referred to as the Most Significant Bit (MSB), and ending with the bit contributing the least value, referred to as the Least Significant Bit (LSB).

Sol id State – Electronic circuitry using only transistors, diodes, integrated circuits, etc. This circuitry has high reliability and low power consumption when compared to electro-mechanical devices.

Storage – Used synonymous with memory.

Terminator – A device or load connected to the output end of a transmission line to terminate or end the signals on that line. In the Series Six Plus PLC, DIP shunts and jumper packs connect on-board resistors which terminate the I/O chain signals on an I/O Receiver or Advanced I/O Receiver if it is the last Receiver in any I/O chain.

Thumbwheel Switch – A rotating numeric switch which can be used for inputting numeric data to a PLC in the form of BCD digits.

Unit of Load – An expression used to describe the load placed on a power supply by an I/O module or a CPU module. Also the amount of current or load capacity available from a power supply.

Unlatch – A PLC function that causes an output previously turned on by a latch function to turn off no matter how briefly the function is enabled.

User Memory – Term commonly used when referring to the memory circuits within the PLC used for storage of user ladder diagram programs.

Volatile Memory – A memory that will lose the information stored in it if power is removed from the memory circuit devices.

Watchdog Timer – A hardware timer within the PLC used to ensure that certain hardware conditions are met. Used as a system check. In the Series Six Plus PLC, the duration of the watchdog timer is 300 milliseconds, +/-50 milliseconds.

Word – A measurement of memory length, usually 4, 8, or 16 bits long (16 bits for the Series Six Plus PLC).

Write – To transfer, record, or copy data from one storage device to another.

Artisan Technology Group - Quality Instrumentation ... Guaranteed | (888) 88-SOURCE | www.artisantg.com

INDEX

A

ASCII/BASIC module 1-17
Adaptor Unit 1-21
Addressing I/O 2-31, 2-33
Advanced I/O Receiver 2-46
  I/O chain signal continuation or termination 2-44
  illustration of 2-47
  status and diagnostic indicators 2-48
  troubleshooting with 5-39 to 5-49
Advanced functions 1-10
Alarm conditions 2-7
Applications, list of typical 1-20
Arithmetic Control module
  description of 2-14
  illustration of 2-15
Arithmetic Control to Logic Control cable 3-11
Auxiliary I/O module 2-61
  illustration of 2-62
Auxiliary I/O system, description of 2-61
Axis Positioning modules 1-17

B

Basic functions 1-9
Battery installation 3-8
Battery status indicator 2-18
Blocks, Genius I/O 1-13
Bus Controller module, description of 2-21

C

CCM2 2-22
CCM3 2-25
Cimstar I computer 2-64
CPU I/O station 2-37
  illustration of 2-38
CPU alarm conditions 2-7
CPU configuration set up menu 4-13
  Genius I/O 4-15
  Genius I/O fault table 4-16, 4-18
  Genius I/O fault table definitions 4-19
  bus controller locations page 4-17
  computer mailbox 4-17
  definitions 4-14
  displaying and clearing Genius I/O faults 4-18
  expanded I/O scan 4-14
CPU module installation 3-7
CPU rack mounting 3-3
CPU troubleshooting 5-3
  RUN/STOP key switch 5-6
  Arithmetic Control module 5-12, 5-13
  Combined memory module, battery light 5-15
  Combined memory module, parity light 5-14
  alarm relay 5-18
  battery replacement 5-15, 5-16, 5-17
  fault isolation and repair 5-3
  indicators and switches, location of 5-5
  indicator chart 5-4
  I/O Control/Auxiliary I/O modules 5-9, 5-10
  memory protect key switch 5-6
  power supply 5-6 to 5-9
  start-up instructions 3-31
Channel reference numbering 2-33, 4-4
Channels of I/O 4-3
  selection of 4-4
Checksum, dynamic user memory 4-11
Combined Memory module 2-16
  catalog numbers 2-16
  description of 2-16
  illustration of 2-20
  location in rack 2-19
  memory protection 2-19
  precautions when handling 2-19
  status indicators 2-18
Communicating to Genius I/O system through the DPREQ function 4-44
Communications Control modules 2-22
  description of 2-22
  type 2 (CCM2) 2-22
  type 2 (CCM2), illustration of, 2-24
  type 3 (CCM3) 2-25
  type 3 (CCM3), CCM2 mode 2-25
  type 3 (CCM3), RTU mode 2-25
  I/O CCM 2-26
  I/O Link Local 2-27
Communications networks 1-18

Artisan Technology Group - Quality Instrumentation ... Guaranteed | (888) 88-SOURCE | www.artisantg.com

INDEX

Compatibility guide, Series Six Plus vs Series Six 1-22
Computer mail box 4-40
Configuration of expanded functions, 4-12
Configuration of the Series Six Plus CPU 2-2
Configuration set up menu 4-13

D

DIP switch settings for I/O points 2-32
DO I/O function, addressing 16K I/O points, 4-26
DPREQ function, communicating with Genius I/O system, 4-44
DPREQ register references 4-45, 4-46
Datagram Communications Service 1-20
Definition of terms
Discrete references, internal 2-34
Dynamic user memory checksum 4-11

E

Enabling of expanded functions 4-14
Expanded CPU operation 4-1
Expanded functions 1-10, 4-1
Expanded functions menu 4-10
Expanded mode I/O addressing 2-33, 4-3
Expanded mode I/O references 2-34, 2-35
Expanded mode I/O references, table of 4-8
Expanded time reference 4-27
Extraction/insertion tool 3-4

F

Fault isolation and repair 5-3
Features of Series Six Plus 1-4
Figures, list of xvi to xviii
Floating point functions 4-21
  addition 4-22
  convert floating point to integer 4-24
  convert integer to floating point 4-24
  display format 4-21
  division 4-23
  greater than 4-24
  multiplication 4-23
  programming of 4-22
  subtraction 4-22
Functions, advanced 1-10
Functions, basic 1-9
Functions, expanded 1-10

G

Genius I/O Bus controller 2-21
Genius I/O blocks 1-13
Genius I/O diagnostics 4-28
  bus controller diagnostic storage 4-29
  bus controller input and output addresses 4-29
  bus controller input status definitions 4-29 to 4-33
  bus controller output data 4-36
  bus controller output data definitions 4-36 to 4-37
  bus status/control byte 4-39
  fault table 4-28
  fault table pointer 4-28
  fault table registers 4-34
  point status bit map 4-38
  register memory size 4-28
Genius I/O system
  general description 1-6
  typical communications I ink 1-6
GEnet Factory LAN 1-18, 1-19
Global data service 1-21
Glossary of terms,
Grounding procedures, system 3-15
  ground conductors 3-16
  safety ground 3-16
  signal ground 3-17
  programming device grounding 3-16

H

How to enable expanded functions 4-12

I

I/O CCM 2-26
I/O Control Module
  description of 2-10
  illustration of 2-11
  jumpers, configurable 2-11

Artisan Technology Group - Quality Instrumentation ... Guaranteed | (888) 88-SOURCE | www.artisantg.com

INDEX

I/O Link Local module 2-27
illustration of 2-28
I/O Receiver module 2-43
I/O chain signal continuation or termination 2-44
illustration of 2-43
I/O Transmitter module 2-49
illustration of 2-50
status indicators 2-51
I/O addressing 2-31
expanded mode 2-33
normal mode 2-33
I/O blocks, Genius I/O 1-13
I/O cable catalog numbers 2-64
I/O channels 4-3
I/O circuitry, function of 1-12
I/O interface modules
Advanced I/O Receiver 2-46
I/O Receiver 2-43
I/O Transmitter 2-49
Remote I/O Driver 2-55
Remote I/O Receiver 2-58
list of 2-42
I/O module load 3-28
I/O modules 1-12
I/O modules, table of 1-12
I/O point DIP switch settings 2-32
I/O point address switches, illustration of 2-31
I/O point selection 3-27
I/O power supply 3-20
ac power source connections 3-20
dc power source connections 3-21
specifications 2-30
I/O rack, description of 2-29
interconnections 2-36
specifications 2-30
typical, 2-29 3-19
I/O references, expanded mode, table of 2-35
I/O station 2-36
CPU 2-37
Local 2-39
Remote 2-40
definition of 2-36
I/O structure 2-29
I/O system cables, parallel 3-24, 3-25
I/O system cables, serial link 3-26
I/O system configuration 2-36, 3-19
I/O system interface module
installation 3-21
I/O Receiver 3-22
I/O Transmitter 2-49, 3-22, 4-2
Remote I/O Driver 3-23
Remote I/O Receiver 3-24
I/O system troubleshooting 5-20
I/O rack power supply 5-20, 5-21
I/O indicator chart 5-22 to 5-27
I/O rack connections 5-27 to 5-30
intermittent fault conditions 5-37
suggested sequence of 5-31
CHAIN OK light 5-31
CHAIN PARITY light 5-32
FAULT ENABLE light 5-34
ISOLATED POWER light 5-33
LINK OK light 5-35
LOCAL OK light 5-34
LOCAL PARITY light 5-32
POWER light 5-33
REMOTE OK light 5-36
REMOTE PARITY light 5-37
check at CPU 5-31
input not recognized 5-38
no outputs function 5-38
only 1 output fails 5-38
with the Advanced I/O Receiver 5-39 to 5-49
Input/Output circuitry, function of 1-12
Inserting a printed circuit board 3-5
Instal lation instructions for Series Six Plus 3-1
Installing a battery 3-8
Internal discrete reference memory allocation 2-34
Internal discrete reference mapping 4-5
Internal memory, function of 2-17
Interrupt Input module location in system 4-2
Introduction to Series Six Plus 1 - 1

L

LAN interface module 1-20
List of figures xviii to xvix
List of tables xx to xxi
Local area network, GEnet 1-19

Artisan Technology Group - Quality Instrumentation ... Guaranteed | (888) 88-SOURCE | www.artisantg.com

INDEX

Local I/O station 2-39
Local I/O station, illustration of 2-39
Logic Control module
  description of 2-12
  illustration of 2-13
Logic Control to Arithmetic Control
  cable 3-11
Logic memory, function of 2-16
Logicmaster 6 serial version 2-65
Logicmaster 6 software 1-7, 4-12
Loop Management Module 1-16

M

Maintenance of the Series Six Plus
  PC 5-1
Manuals, related
Memory mapping 4-6, 4-7
Memory protection key switch 2-19
Memory types of 1-11, 2-18
Memory, CMOS RAM 1-11
Module installation, CPU 3-6
Module replacement concept 5-2
Modules, Communications 1-13
Modules, I/O 1-12
Modules, Intelligent 1-13
Modules, System Interface 1-13

N

Network interface 1-20
Normal mode I/O addressing 2-33, 4-3
Normal mode of operation 4-1

0

Operator Interface Unit 1-15
Operator Interface Terminal 1-15
Optional devices 1-14
  Operator Interface Unit 1-15
  Operator Interface Terminal 1-15
  ProLoop Process Controllers 1-16
  Redundant Processor Unit 1-14
Override Detection, Active 2-17

P

PC compatibility guide 1-22
PC terminology 1-21
Parallel bus I/O cables 2-64, 3-24
Physical equipment configuration 2-1
Planning, system 1-20
Power supply 2-4
  auxiliary circuit board 2-8
  block diagram 2-8
  dc voltage outputs 2-8
  specifications 2-7
  terminal block connections 2-6
  user items 2-5
Product structure 2-1
Preface iii
ProLoop Process Controllers 1-16
Programmable Controllers
  Series Six Plus 1-2
  advantages of 1-2
  block diagram 1-1
  concepts 1-11
  definition of 1-1
  terminology 1-21
Programming functional groups 1-9,
  1-10
Programming language 1-9
Programming requirements 1-7
Programming the Series Six Plus,
  general information 1-7
  with a Cimstar I computer 2-64
  with an IBM PC 2-65
  with a Workmaster computer 2-62

R

RPU addressing 2-65
RS-232 to RS-422 Adaptor 1-21
Rack configuration 2-2
Rack mounting brackets 2-3
Real I/O mapping 4-5
Real I/O memory allocation 2-34
Real-time clock 4-27
Redundant Processor Unit 1-14
Register memory size 4-5
Related publications iv
Remote I/O Driver 2-55
  addressing 2-56
  illustration of 2-55
  option jumpers 2-57
  status byte 2-56
Remote I/O Receiver 2-58
  illustration of 2-58
  option jumpers 2-60
Remote I/O station 2-40
  illustration of 2-41

Artisan Technology Group - Quality Instrumentation ... Guaranteed | (888) 88-SOURCE | www.artisantg.com

INDEX

Remote I/O system 2-52
configuration jumpers 2-54
remote I/O addressing 2-53
system response time 2-53
typical connections 2-52
Removing a printed circuit board 3-6
Required references, summary of 4-9
I/O references 4-9
Register references 4-19

S

Scan rate 1-5
Scratch pad 2-17
Series Six Plus
features of 1-4
I/O diagnostics 4-2
I/O structure 2-29
installation 3-1
Arithmetic Control module 3-11
Auxiliary I/O module 3-13
CPU module installation 3-7
CPU power supply connections 3-14
CPU rack installation 3-2
Combined memory module 3-8
Communications Control modules, 3-13
I/O Control module 3-12
Logic Control module 3-11
extraction/insertion tool 3-4
instructions 3-1
mounting, illustration of 3-3
Software packages 1-8
Specifications, General 1-5
Start-up CPU 3-31
System grounding procedures 3-15
ground conductors 3-76
safety ground 3-16
signal ground 3-17
programming device grounding 3-16
System planning 1-20

T

Table of contents vii to xvii
Tables, list of xviii to xix
Terminology, PC 1-21
Troubleshooting and repair 5-1
Troubleshooting, general information 5-2
Troubleshooting sequences 5-31
Troubleshooting with the Advanced I/O Receiver 5-39 to 5-49

U - W

Units of load, 3-28, 3-29

Window function 4-24
Window function, entering a 4-25
Workmaster computer
general description of 1-7, 1-8
connection to Series Six Plus 2-62
illustration of 2-64
to Series Six Plus adapter boards 2-62
to Series Six Plus connections 2-63
system grounding procedures 3-15
to Workmaster connections 2-63

Artisan Technology Group - Quality Instrumentation ... Guaranteed | (888) 88-SOURCE | www.artisantg.com

Artisan Technology Group - Quality Instrumentation ... Guaranteed | (888) 88-SOURCE | www.artisantg.com

Artisan Technology Group is an independent supplier of quality pre-owned equipment

Gold-standard solutions

Extend the life of your critical industrial, commercial, and military systems with our superior service and support.

We buy equipment

Planning to upgrade your current equipment? Have surplus equipment taking up shelf space? We'll give it a new home.

Learn more!

Visit us at **artisantg.com** for more info on price quotes, drivers, technical specifications, manuals, and documentation.

Artisan Scientific Corporation dba Artisan Technology Group is not an affiliate, representative, or authorized distributor for any manufacturer listed herein.

We're here to make your life easier. How can we help you today?

(217) 352-9330 | sales@artisantg.com | artisantg.com

ARTISAN® TECHNOLOGY GROUP