

GE Fanuc Automation

Programmable Control Products

Power Transducer for the Series 90-30 PLC

User's Manual

GFK-1734A

January 2000

Warnings, Cautions, and Notes as Used in this Publication

Warning

Warning notices are used in this publication to emphasize that hazardous voltages, currents, temperatures, or other conditions that could cause personal injury exist in this equipment or may be associated with its use.

In situations where inattention could cause either personal injury or damage to equipment, a Warning notice is used.

Caution

Caution notices are used where equipment might be damaged if care is not taken.

Note

Notes merely call attention to information that is especially significant to understanding and operating the equipment.

This document is based on information available at the time of its publication. While efforts have been made to be accurate, the information contained herein does not purport to cover all details or variations in hardware or software, nor to provide for every possible contingency in connection with installation, operation, or maintenance. Features may be described herein which are not present in all hardware and software systems. GE Fanuc Automation assumes no obligation of notice to holders of this document with respect to changes subsequently made.

GE Fanuc Automation makes no representation or warranty, expressed, implied, or statutory with respect to, and assumes no responsibility for the accuracy, completeness, sufficiency, or usefulness of the information contained herein. No warranties of merchantability or fitness for purpose shall apply.

The following are trademarks of GE Fanuc Automation North America, Inc.

Alarm Master	Genius	PowerMotion	Series Six
CIMPLICITY	Helpmate	ProLoop	Series Three
CIMPLICITY 90–ADS	Logicmaster	PROMACRO	VersaMax
CIMSTAR	Modelmaster	Series Five	VersaPro
Field Control	Motion Mate	Series 90	VuMaster
GEnet	PowerTRAC	Series One	Workmaster

©Copyright 1999 - 2000 GE Fanuc Automation North America, Inc.
All Rights Reserved.

Content of This Manual

This manual describes the Series 90-30 Power Transducer (PTM) – an intelligent system for measuring electrical power consumption or for monitoring voltages between an electrical generator and associated power grid.

Chapter 1. **PTM Description and Specifications:** This chapter presents physical details such as dimensions and indicator light information as well as a specifications table.

Chapter 2. **Configuration and Data Transfer:** Discusses configuration, operation modes, and automatic data transfers via %I, %Q, %AI, %AQ memory.

Chapter 3. **Installation:** Contains mounting and wiring instructions and diagrams.

Appendix A. **Ladder Logic Example:** Example of ladder logic used to send parameter data to the PTM.

Appendix B. **IC693PTM340/341 Interface Cables:** Data sheet for interface cables.

Appendix C. **Glossary of Terms and Acronyms:** Definitions of terms and acronyms found in this manual.

Related Publications

GFK-0356P (or later version) *Series 90-30 PLC Installation and Hardware Manual*

GFK-0467 *Series 90-30/20/Micro PLC CPU Instruction Set Reference Manual*

Contents

Chapter 1 PTM Description and Specifications 1-1

Product Overview 1-1
Features and Applications 1-1
PTM Product Ordering Information 1-2
Difference Between IC693PTM100 and IC693PTM101 1-2
Operating Modes 1-2
Power Monitor Mode 1-2
Synchro Monitor Mode 1-3
Processing Module 1-3
Interface Board 1-3
Data Reported to the PLC for Power & General Monitoring Purposes 1-3
Common Functions (All configurations) 1-3
Power Synchronization Functions 1-4
Power Monitoring Functions 1-4
Series 90-30 PLC Compatibility 1-4
Specifications 1-5
Processing Module Power Requirements 1-5
Measurement Specifications 1-5
MONITOR Mode 1-5
SYNCHRO Mode: 1-5
Table 1-2, Continued 1-6
Measurement Accuracy 1-6
Interface Board Input Terminal Ratings 1-6
PTM Measurement Ranges 1-6
Measurement Data Scaling 1-6
Automatic Data Exchange PLC Memory Requirement 1-6
Data Exchange Time Between PLC & PTM 1-6
Table 1-2, Continued 1-7
Operating Environment 1-7
Agency Approvals and Listings 1-7
Power Measurement Configurations 1-7
Protection Feature 1-7
Figures and Dimensions 1-8
Processing Module 1-8
Interface Board 1-8
IC693CBL340/341 Cables 1-9
Processing Module's LED Indicators 1-9
User-Supplied Equipment Requirements 1-10

Chapter 2 Configuration and Data Transfer 2-1

Overview 2-1
Configuration 2-1
Power Monitor Mode 2-2
Synchro Monitor Mode 2-2
Parameter Data 2-2
PLC - PTM Communication Protocol 2-2
Data required from PLC 2-3

%Q Bits 2-3
%AQ Parameter Transfer Words 2-5
Data Reported to the PLC for Power Monitoring Purposes 2-7
%AI Words in 3-Phase Power Monitor Mode 2-8
%AI Words in 3-Wire Single-Phase Power Monitor Mode 2-9
Data reported to the PLC for Synchronization Monitoring 2-10
%AI Words in Synchro Monitor Mode 2-11
Interpretation of Reported Results 2-12
Relative Reporting Mode 2-12
Absolute Reporting Mode 2-13
Phase n# Power 2-13
Active and Reactive Total Energy (%AI Words 21 - 24) 2-13
Handling %AI Word Rollover 2-14
Maintaining Your Data 2-14
Sliding Average (3-Phase) 15-Minute Power Demand (%AI Words 19 and 20) 2-15
Total Power Factor (%AI Word 17) 2-15
Parameters Common to Both Reporting Modes 2-16
%I Status flags returned by the PTM 2-17

Chapter 3 Installation 3-1
General Wiring Notes 3-1
Mounting Location 3-2
Safety Cautions 3-3
Interface Board Frame Ground Connection 3-3
General Safety Warnings 3-3
Wiring Diagrams 3-4

Appendix A Ladder Logic Example A-1

Appendix B IC693PTM340/341 PTM Interface Cables B-1

Appendix C Glossary of Terms and Acronyms C-1

Figure 1-1. Series 90-30 PTM Processing Module 1-8
Figure 1-2. PTM Interface Circuit Board 1-8
Figure 1-3. IC693CBL340/341 PTM Cables 1-9
Figure 3-1. Basic system configuration 3-2
Figure 3-2. PTM Mounting Location 3-2
Figure 3-3. Connections for 120/240 VAC system with CTs 3-4
Figure 3-4. User Connection Diagram, WYE 3-Phase 4-Wire system 3-5
Figure 3-5. User Connections for 120/208 3-Phase 3-Wire Delta system 3-6
Figure 3-6. Connection to 3-Phase 4-Wire system with 3 PTs 3-7
Figure 3-7. Configuration for 3-Phase 3-Wire Delta system with 2 PTs 3-8
Figure 3-8. Wye Synchro/Power Monitor connection 3-9
Figure 3-9. Delta Synchro/Power Monitor connection 3-10
Figure B-1. Figure IC693CBL340/341 PTM Interface Cables B-1
Figure B-2. PTM Component Mounting and Cable Connection B-2

Contents

Table 1-1. PTM Catalog Numbers 1-2
Table 1-2. Specifications 1-5
Table 1-3. Faults Relating to Processing Module's Fault LED 1-9
Table 2-1. %Q Command Status Bits sent to PTM 2-3
Table 2-2. Missing Voltages/ Currents Reconstruction Dependencies 2-4
Table 2-3. %AQ Parameter Number/Value sent to PTM 2-5
Table 2-4. Parameter Numbers (Sent to PTM via Second %AQ Word) 2-6
Table 2-5. %AI Word Feedback Data from the PTM in 3-Phase Power Monitor Mode 2-8
Table 2-6. %AI Feedback Data from the PTM in Single-Phase Power Monitor Mode 2-9
Table 2-7. %AI Feedback Data from the PTM in Synchro Monitor Mode 2-11
Table 2-8. Relative Reporting Mode Reference Values 2-12
Table 2-9. Absolute Reporting Units 2-13
Table 2-10. Theoretical Worst Case Rollover Times 2-14
Table 2-11. Parameters Common to Relative and Absolute Modes 2-16
Table 2-12. %I Status Bits from the PTM 2-17

Chapter 1 PTM Description and Specifications

Product Overview

The Series 90-30™ Power Transducer (PTM) is an intelligent system for measuring electrical power consumption or for monitoring voltages between an electrical generator and the electrical power grid. The PTM module is not intended to provide a protective relay function or be used for energy billing purposes.

The PTM connects to user-supplied current and potential transformers, which furnish the input signals the PTM uses to calculate its data. The Processing module, which mounts in a Series 90-30 PLC, transfers the data it gathers to the PLC where it can be used for a wide variety of purposes. The PTM can be used with a wye or delta type three-phase power system or with a single-phase power system.

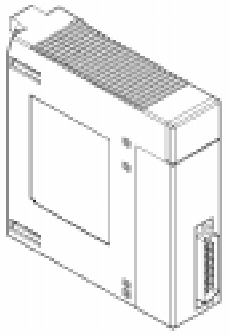

Processing Module

The PTM consists of three parts, which are all included under one catalog number:

- **Processing Module** – a module that mounts in a Series 90-30 Rack.
- **Interface Board –** a panel-mounted circuit board. This board interfaces between the Processing module and the input transformers (current and potential).
- **Interface cable** – connects the Processing module to the Interface board.

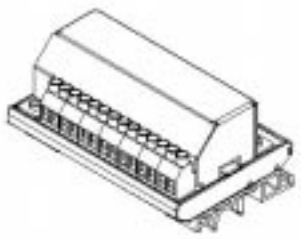

Interface Board

Features and Applications

- Uses standard, user-supplied current and potential transformers as its input devices
- Accurately measures RMS voltage and current, power, power factor, frequency, energy, and total 3-phase 15-minute power demand
- Data reporting applications

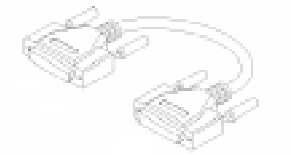

Interface Cable

™ Series 90-30 is a trademark of GE Fanuc North America

- Fault monitoring applications
- Generator control features for generator to power grid synchronizing applications
- Demand penalty cost reduction/load shedding applications
- The Processing module mounts in a standard Series 90-30 baseplate slot. The matching Interface board is DIN-rail mounted. It is compatible with standard GE Fanuc PLC programming software.
- The generic design of the PTM has one 3-phase voltage input, one 1-phase voltage input, one 3-phase current input and one single phase neutral-current input. The module digitizes these inputs and analyzes them to calculate all of the generator synchronization and power monitoring data.

PTM Product Ordering Information

The Processing module and its Interface board are considered to be a matched set and, therefore, are not sold separately. The two PTM cables, however, may be ordered as separate items. There are four catalog numbers in the PTM product line:

Table 1-1. PTM Catalog Numbers

IC693PTM100	Contains the Processing module, its matched Interface board, and the 19” (0.5 meter) interface cable
IC693PTM101	Contains the Processing module, its matched Interface board, and the 39” (1 meter) interface cable.
IC693CBL340	19” (0.5-meter) interface cable.
IC693CBL341	39” (1-meter) interface cable

Difference Between IC693PTM100 and IC693PTM101

The only difference between the IC693PTM100 and IC693PTM101 is in the length of interface cable supplied with each system. The PTM100 comes with a 19” (0.5 meter) cable, and the PTM101 comes with a 39” (1 meter) cable.

Operating Modes

The PTM operates in one of the two following modes, which are selectable by a %Q bit in the user’s PLC application program:

Power Monitor Mode

In this mode, the PTM samples AC voltage and current and calculates the RMS values of these waveforms. There are several sub-modes that are selected via %Q bits in the PLC ladder logic program. These are:

1. **Single Mode.** This sub-mode has two options:

- Three single phases
- One 3-wire single phase (120/240)

2. **3-Phase Mode.** In this sub-mode, complex power, complex energy consumption, and power factor are calculated. This sub-mode has two options:
   - Wye
   - Delta.

Synchro Monitor Mode

In this mode, the PTM samples three AC voltages (produced by a generator) and one voltage from the power grid. The module then provides information on the voltages, frequencies and relative phase.

Processing Module

The PLC CPU controls the PTM Processing module by sending it several %Q bits and %AQ words during each PLC sweep. These %Q bits and %AQ words represent commands such as Enabled/Disabled, Power/Synchro Mode, Display Mode, and Gain values.

In return, the Processing module provides information to the PLC CPU by sending it several %I bits and %AI words each PLC sweep. The information sent by the Processing module includes voltage, current, power, and phase values, as well as discrete fault status.

Interface Board

The PTM Interface board has one 3-phase voltage and one 3-phase current input, one 1-phase neutral current input and one additional 1-phase voltage input. The Interface Board has 8 separate input terminals for these voltage and current inputs. Its terminal block accepts the 10AWG size wire commonly used in power utility applications. The Interface board uses a DB-25 connector and is connected to the Processing module via one of the IC693CBL340/341 shielded cables.

The Interface board translates the 0 to 5 A current transformer (CT) signals and the 120V potential transformer (PT) signals to 0 to 1 VAC signals for use by the Processing module. The Interface board is not equipped with CT shorting-bars. These must be provided separately by the user.

Data Reported to the PLC for Power & General Monitoring Purposes

Common Functions (All configurations)

- Module Status Word
- Fault Condition Reporting

Power Synchronization Functions

- Data calculation rate: 20ms @ 50hz, 16.67 ms @ 60Hz.

- Data latency of less than 5ms plus ½ of line frequency period
- RMS voltage of phase A grid (in volts x 10)
- RMS voltage of phase A, B, and C generator (in volts x 10)
- Phase angle between phase A grid and phase A generator (in degrees x 10)
- Frequency of phase A grid and phase A generator (in Hz x 100)

Power Monitoring Functions

- Data calculation rate for monitoring functions: 20ms @ 50hz, 16.67 ms @ 60Hz
- RMS voltages of phase A, B, and C (in volts x 10)
- DC component of measured RMS voltages (in volts x 10)
- RMS currents of phase A, B, C, and Neutral (in Amperes x 1000)
- Real and reactive power reported per phase and total in Watts, Volt-Amperes-Reactive
- Real and reactive total energy consumption in Watt-Seconds and Volt-Amperes-Reactive-Seconds (updated once per second), re-settable by the user
- Total power factor
- Average real and reactive power consumption (sliding 15 minute window updated once per second)
- Line frequency (in Hz x 100)

Series 90-30 PLC Compatibility

The PTM is compatible with all Series 90-30 CPUs. The Processing module may be installed in any type of Series 90-30 baseplate (CPU, Expansion, or Remote). There are no restrictions as to the maximum number of Processing modules per PLC system, or per PLC baseplate, as long as the PLC power supply has sufficient capacity and there is sufficient %I, %Q, %AI, and %AQ memory available. However, as noted in Chapter 3, "Installation," it is beneficial to keep the Interface module power wiring physically separated from PLC signal wiring in order to reduce noise coupling; this can have a bearing on which baseplate slots to choose when mounting Processing modules.

Warning

DO NOT TOUCH the connectors or wiring after powering up the PTM system. Hazardous voltages exist, and death or injury may result.

The PTM Interface board frame ground connection must always be installed and must be installed before any other wiring is attached.

To reduce risk of electric shock, always open or disconnect all circuits connected to the PTM Interface board from the power distribution system before installing or servicing current-sensing transformers used with the the Interface board.

Specifications

Table 1-2. Specifications

Processing Module Power Requirements	
Backplane Power Consumption	5V @ 400mA max. (from 90-30 backplane)
Total Power Dissipation:	4W max.
Isolation from Backplane	1500V
Measurement Specifications	
MONITOR Mode	
1 x 3-phase voltage (PT):	
Impedance:	>200k ohms
Range:	10 -- 150 VAC RMS (120VAC nominal)
Frequency:	35-70 Hz
1 x 3-phase current (CT) and neutral current	
Impedance:	<50mΩ
Range:	0 – 7.5A RMS (5A nominal)
Frequency:	35-70 Hz
SYNCHRO Mode:	
1 x 3-phase voltage + 1 x 1-phase voltage (generator + grid)	
Impedance:	>200k ohms
Range:	10 -- 150 VAC RMS (120VAC nominal)
Frequency:	35-70 Hz
Phase:	+/- 180°
1 x 3-phase current + 1 neutral current	
Impedance:	<50mΩ
Range:	0 – 7.5A RMS (5A nominal)
Frequency:	35-70 Hz

Table 1-2, Continued

Measurement Accuracy	
Voltage	0.2%
Current	0.2%
kW, kVAR, kVA	0.4%
kWH, kVARH, kVAH	0.4%
Power factor	1%
Frequency	0.05 Hz
Phase	1.0^{O}
Resolution	14-bit A/D converter
Interface Board Input Terminal Ratings	
Current	15 Amps maximum
Voltage	150 volts maximum.
PTM Measurement Ranges	
Voltage inputs	10 to 150Vrms (120Vrms nominal)
Current inputs	0 to 7.5 Amps. rms (5A rms nominal)
Frequency	35Hz to 70Hz
Measurement Data Scaling	
All data is scaled to range from 0 to 32,767 (left justified) or in engineering units (user selected).	
Automatic Data Exchange PLC Memory Requirement	
%I	16 bits
%Q	16 bits
%AI	25 words
%AQ	2 words
Data Exchange Time Between PLC & PTM	
A complete data exchange between the PTM and PLC occurs during each PLC scan.	

Table 1-2, Continued

Operating Environment	
Enclosure Mounting	Required
Operating Temperature	0 to 55°C
Storage Temperature	-40 to 85°C
Humidity	5 to 95% non-condensing
Vibration	3.5mm, 5-9Hz: 1G @9 to 150Hz
Mechanical Shock	15 G's for 11ms
Agency Approvals and Listings • CE Mark • CISPR 11 • UL/CUL • ANSI C37.90A-1989	
Power Measurement Configurations • 3-phase WYE • 3-phase delta • 3 independent phases • 120/240 3-wire connection	
Protection Feature Watchdog circuitry continuously checks that the PTM is following its normal pattern of operation.	

Figures and Dimensions

Dimensions shown in inches with mm in parentheses.

Processing Module

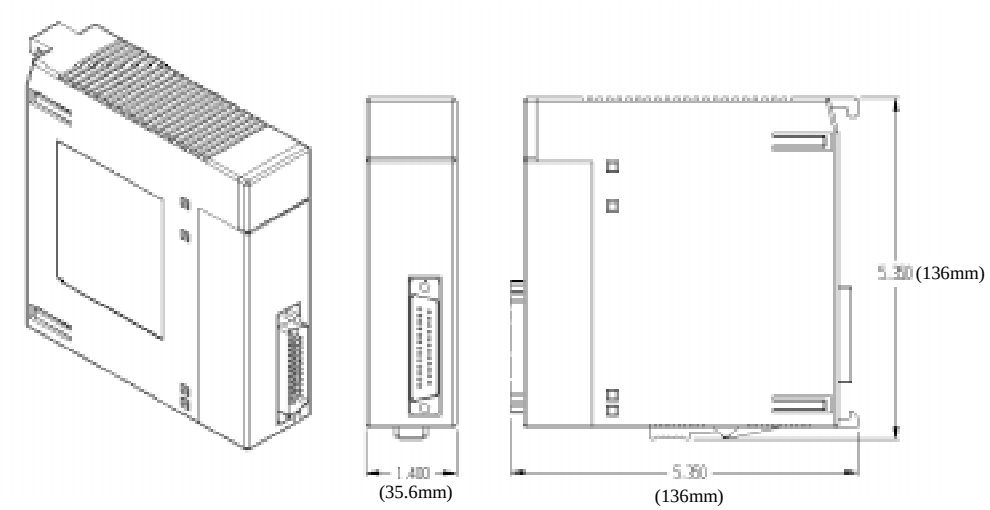

Figure 1-1. Series 90-30 PTM Processing Module

Interface Board

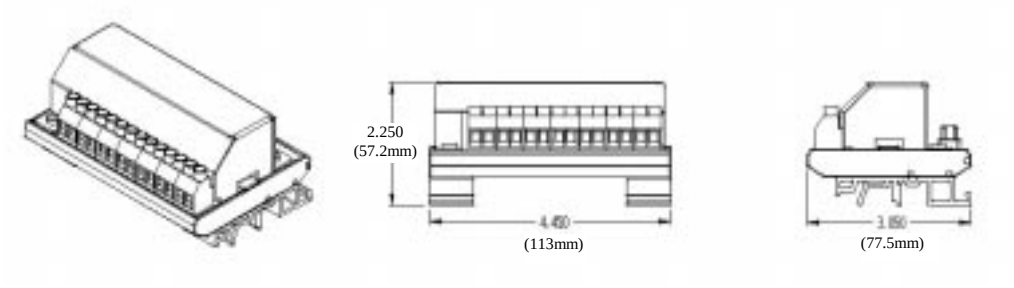

Figure 1-2. PTM Interface Circuit Board

IC693CBL340/341 Cables

The PTM cables come in two sizes:

- IC693CBL340 is 19 inches (0.5 meter) long
- IC693CBL341 is 39 inches (1 meter) long

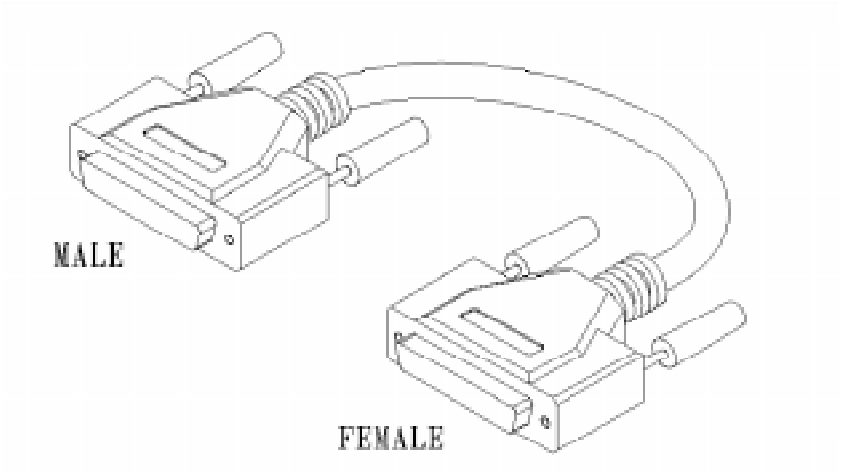

Figure 1-3. IC693CBL340/341 PTM Cables

Processing Module's LED Indicators

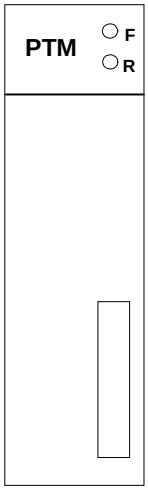

R (Running) – This Green LED indicates:

- ON = Backplane power present and module functioning OK.
- FLASHING = module failure
- OFF = Backplane power missing or module defective

F (Fault) – This red LED, when OFF, indicates that there are no interface faults. When ON, either steady or flashing, it indicates that one or more of the three possible faults listed below is present (each of these faults has a corresponding %I bit – see Chapter 2 for details). If this LED flashes or blinks, it may indicate an intermittent fault condition. For example, if an AC input voltage level were varying above and below the limit value, the LED would turn ON and OFF correspondingly.

Table 1-3. Faults Relating to Processing Module's Fault LED

Fault	Possible Causes	Fault Bit
Phase A not present	Blown fuse, poor or missing connection	(6th %I bit)
Over-range condition on one or more inputs	Input voltage or current values too high	(7th %I bit)
Phase polarity fault	Most likely due to a wiring change	(8th %I bit)

User-Supplied Equipment Requirements

The user must supply the following components depending upon the application. This equipment includes:

- Current transformers
- Potential transformers
- 1 Amp fuses for each of the voltage leads connected to the PTM Interface module.
- 1 Amp fuse for the common or return line for the voltage lead on the Interface module.
- A CT shorting block for each current transformer (CT) connection used on the PTM Interface module when used with external CTs.
- Branch circuit fuses or breakers rated at 15 Amps if the PTM is used to monitor a small load directly with no additional CTs.

Chapter 2 Configuration and Data Transfer

Overview

The PTM Processing module, which mounts in the PLC baseplate, must be configured as a "Foreign" module on the Series 90-30 PLC configuration software screen. The %Q bits and %AQ words are used to transfer required commands and parameter data from the PLC to the PTM that determine such things as operating mode, gain, offsets, etc. This data will usually be sent in the first few rungs of the ladder program since the PTM will not be functional until it receives this data. In return, the PTM writes data to the PLC's %I and %AI memory that is used in the PLC for calculating and reporting PTM measurements.

Configuration

These are the three basic steps to configure a PTM Processing module in a Series 90-30 PLC:

1. Determine the PLC baseplate slot that the Processing module will be installed in. The section "Mounting Location" in Chapter 3 offers guidelines that are designed to improve safety and reduce noise coupling.
2. In the PLC configuration software, select the slot determined in Step 1 and configure that slot as a "Foreign" module.
3. On the Foreign module configuration screen, configure the following memory allocations. You will have to configure both the starting memory location (address) as well as the size for each type.

Type	Size
%I	16 bits
%Q	16 bits
%AI	25 words
%AQ	2 words

Note that there are no additional parameters to set. Items such as operating modes, gains, and measurement options are selected using %Q and %AQ memory data transfers from the PLC ladder program.

Power Monitor Mode

Measurement Modes:

- 3 Single Phase Systems: (1 PT & 1 CT for each phase)
- 3 WIRE Single Phase System 120/240 (2 PTs & 2 CTs)
- 4 WIRE WYE:
  - 3 PTs, 3 CTs plus Neutral CT (optional)
  - 2 PTs, 2 CTs (for balanced loads)
- 3 WIRE DELTA: 2 PTs, 2 CTs

Synchro Monitor Mode

Measurement Mode (one basic mode only):

- Three generator PTs (two optional) and one grid voltage PT

Parameter Data

The Gain and Offset parameters for the PTM Processing module are specified on the Processing module label, located on the side of the module. In addition, there are eight channel gains specified for the PTM Interface module. The user programs these ten values in the appropriate PLC memory locations so it can in turn send them to the PTM. An example program showing how to do this is contained in Appendix A. The constants are typed into specific %R registers and the PLC program sends them sequentially to the PTM via the two %AQ registers configured for the PTM.

PLC - PTM Communication Protocol

Data is exchanged between the PLC and the PTM modules with every PLC scan and they are organized in 16 %I bits, 25 %AI registers, 16 %Q bits, and 2 %AQ registers.

Data required from PLC

%Q Bits

The configuration data received from the PLC unit consists of 16 %Q bits and 2 %AQ words. The following table shows the structure of the %Q bits. To determine exact memory locations for these bits, determine the starting address for the PTM's %Q memory (this is assigned when the PTM is configured, as described in "Configuration" earlier in this chapter), then match the bit to the applicable memory location. For example, if the starting %Q address was configured to be %Q0016, then the 1st bit in the table below would be %Q0016, the 2nd bit would be %Q0017, the 3rd bit would be %Q0018, etc.

Table 2-1. %Q Command Status Bits sent to PTM

%Q Discrete Data Sent from Processing Module to the PLC	
Bit	**Description**
1st	PTM Operation: 0 = Disabled, 1 = Enabled
2nd	PTM Mode: 0 = Power Monitor, 1 = Synchro Monitor
3rd	Power Monitor Mode: 0 = Single Mode, 1 = 3-Phase Mode
4th	Single Mode: 0 = 3 single phases , 1 = 3-wire single phase (120/240) 3-Phase Mode: 0 = WYE, 1 = DELTA
5th	Display Mode: 0 = Relative, 1 = Absolute
6th	Spare
7th	Spare
8th	Spare
9th	PT_{GA} (Grid Phase A) : 0 = not used, 1 = used
10th	CT_N (Neutral) : 0 = not used, 1 = used
11th	PT_A : 0 = not used, 1 = used
12th	CT_A : 0 = not used, 1 = used
13th	PT_B : 0 = not used, 1 = used
14th	CT_B : 0 = not used, 1 = used
15th	PT_C : 0 = not used, 1 = used
16th	CT_C : 0 = not used, 1 = used

Bit1: PTM Operation: When enabled, the PTM unit performs its measurements. It should be disabled just after powering on the PLC until the PTM unit is fully configured or briefly when the unit is reconfigured. Clearing this bit will reset the accumulated real and reactive powers. When enabled, the PTM begins operation if the A-phase voltage is present (V_A for Power Monitoring, or V_{GA} for Synchro Mode).

Bit2: PTM Mode: This bit determines the PTM operational mode. If this flag bit is cleared, the PTM runs in Power Monitor Mode. In Power Monitor Mode, the PT_{GA} should not be used and the PT_A, PT_B and PT_C measure the Phase Voltages of the Grid. If the PTM Mode flag bit is set to 1, the PTM runs in Synchro Monitor Mode. In Synchro Monitor Mode the PT_{GA} must measure the Phase A Voltage of the Grid and the PT_A, PT_B and PT_C measure the Generator Phase Voltages. PT_B and PT_C are optional in this mode (with the appropriate %Q bits reset).

Bit3: Power Monitor Mode: Determines relation among the phases. If cleared, the phases are considered to be independent (i.e. single), otherwise they are considered to belong to one 3-phase system.

Bit4: Single / 3-phase Mode: If Power Monitor Mode is set as Single Mode and this flag bit is cleared, the monitored system is considered as 3 single phase system. If the flag bit is set, the monitored system is considered as one 3-WIRE single-phase (120/240) system. If Power Monitor Mode is set as 3-phase, this flag bit indicates WYE or DELTA connection of the phases.

Bit5: Display Mode: If Display Mode flag bit is cleared, the reported values of the measured variables (Voltage, Current, and Power) should be interpreted as the fractional, relative values. If this flag bit is set to 1, the reported values represent the actual values in Volts, Amperes, Watts, etc.

Bits9-16: PTn / CTn: If the flag bit is set it indicates that the voltage/current is measured and the PTM unit can use it. If cleared, the variable is not measured and the PTM unit will try to reconstruct this missing variable via sampling from the other measured variables. The following explains which variable in which system configuration can be reconstructed:

Table 2-2. Missing Voltages/ Currents Reconstruction Dependencies

Variable	Configuration
Neutral Current	3-phase WYE if all phase currents are measured
Neutral Current	3-WIRE single phase system if both section currents are measured
Phase Current/Voltage	3-phase balanced WYE system if other two phase variables are measured
Phase Current/Voltage	3-phase balanced/unbalanced DELTA system if other two phase variables are measured

%AQ Parameter Transfer Words

The two %AQ words are intended for parameter transfer from the PLC to the PTM. The Parameter Number word identifies which Parameter number, listed in the Parameters table below, is to be sent to the PTM. The following table shows the structure of the %AQ words. To determine exact memory locations for these words, determine the starting address for the PTM's %AQ memory (this is assigned when the PTM is configured, as described in "Configuration" earlier in this chapter), then match the word to the applicable memory location. For example, if the starting %AQ address was configured to be %AQ0016, then the 1st word in the table below would be %AQ0016, and the 2nd word would be %AQ0017.

Table 2-3. %AQ Parameter Number/Value sent to PTM

%AQ Word Data Sent From Processing Module to PLC	
%AQ Word	**Description**
1st	Parameter Number
2nd	Parameter Value

The parameter values and their parameter numbers are detailed in Table 2-4. . **The Parameters 1 to 10 must be sent to the PTM after the PLC powers up in order to establish essential PTM operating values.** Since only one parameter can be sent per PLC scan, the entire set of 11 parameters requires 11 scans.

Table 2-4. Parameter Numbers (Sent to PTM via Second %AQ Word)

Parameters	
Parameter Number	**Description**
1	PTM Offset
2	PTM Gain
3	Channel 1 Gain, V_{GA}
4	Channel 2 Gain, I_N
5	Channel 3 Gain, V_A
6	Channel 4 Gain, I_A
7	Channel 5 Gain, V_B
8	Channel 6 Gain, I_B
9	Channel 7 Gain, V_C
10	Channel 8 Gain, I_C
11	Zero / Diagnostic Address

Word1: PTM Offset: The value found on the PTM label. Should not be modified.

Word2: PTM Gain: The value found on the PTM label. Should not be modified.

Words 3-10: Channel #n Gain: The value found on the label of the PTM Interface Module. If necessary, it can be modified. Valid range is between –32768 and +32767. A value of –32768 (0x8000) corresponds to the gain of –2, a value of –16384 (0xC000) corresponds to the gain of –1. A value of 0 corresponds to the gain of 0, a value of +16384 (0x4000) corresponds to the gain of +1 and a value of +32767 (0x7FFF) corresponds to the gain of +2. The default value is close to +16384 (0x4000), i.e. the default gain is close to +1. Note that these gains affect the input signals and cannot be used as scale factors for PTs or CTs. Scale factors for PTs and CTs must be applied in the PLC program.

Word 11: Zero / Diagnostic Address: A zero value sent to the PTM unit will return the Firmware Version as a content of the 25th %AI word (see %AI tables later in this chapter). Non-zero values are reserved for manufacturing diagnostic purposes.

Data Reported to the PLC for Power Monitoring Purposes

The units reported depend on the whether the Relative or Absolute Reporting mode is selected. See the section “Interpretation of Reported Results” later in this chapter for details.

- Status Bits
- RMS value of Phase or Line-to-Line voltages
- DC Component of Phase or Line-to-Line voltages
- RMS value of Phase Current
- Phase Power
- RMS value of Neutral Current
- Total 3-phase Power Factor
- Line Frequency
- Total 3-phase 15-minute Power Demand
- Total energy

%AI Words in 3-Phase Power Monitor Mode

The data reported to the PLC by the PTM unit running in the 3-Phase (or 3 x single phase) Power Monitor Mode is detailed in the following table. To determine exact memory addresses for these %AI words, first determine the starting address for the PTM's %AI memory (this is assigned when the PTM is configured, as described in "Configuration" earlier in this chapter), then match the word to the applicable memory location. For example, if the starting %AI address was configured to be %AI0016, then the 1st word in the table below would be %AI0016, the 2nd word would be %AI0017, the 3rd word would be %AI0018, etc.

Table 2-5. %AI Word Feedback Data from the PTM in 3-Phase Power Monitor Mode

%AI DataSent from Processing Module to PLC in 3-Phase Power Monitor Mode	
%AI Word	**Description**
1st	Phase A Voltage - RMS value
2nd	Phase A Voltage - DC component
3rd	Phase A Current - RMS value
4th	Phase A Active Power
5th	Phase A Reactive Power
6th	Phase B Voltage - RMS value
7th	Phase B Voltage - DC component
8th	Phase B Current - RMS value
9th	Phase B Active Power
10th	Phase B Reactive Power
11th	Phase C Voltage - RMS value
12th	Phase C Voltage - DC component
13th	Phase C Current - RMS value
14th	Phase C Active Power
15th	Phase C Reactive Power
16th	Neutral Current - RMS value
17th	Total (3-Phase) Power Factor
18th	Line Frequency
19th	Sliding-average (3-Phase) 15-minute Active Power Demand
20th	Sliding-average (3-Phase) 15-minute Reactive Power Demand
21st	Total (3-Phase) Active Energy - LSW
22nd	Total (3-Phase) Active Energy - MSW
23rd	Total (3-Phase) Reactive Energy - LSW
24th	Total (3-Phase) Reactive Energy - MSW
25th	Firmware Version / Diagnostic Value

%AI Words in 3-Wire Single-Phase Power Monitor Mode

The data reported to the PLC by the PTM unit running in 3-wire, Single-Phase (120/240) Power Monitor Mode is detailed in the following table. To determine exact memory addresses for these %AI words, first determine the starting address for the PTM's %AI memory (this is assigned when the PTM is configured, as described in "Configuration" earlier in this chapter), then match the word to the applicable memory location. For example, if the starting %AI address was configured to be %AI0016, then the 1st word in the table below would be %AI0016, the 2nd word would be %AI0017, the 3rd word would be %AI0018, etc.

Table 2-6. %AI Feedback Data from the PTM in Single-Phase Power Monitor Mode

%AI Word Data Sent from Processing Module to PLC in Single-Phase Power Monitor Mode	
%AI Word Offset	**Description**
1st	Section A Voltage – RMS value
2nd	Section A Voltage – DC component
3rd	Section A Current – RMS value
4th	Section A Active Power
5th	Section A Reactive Power
6th	Section B Voltage – RMS value
7th	Section B Voltage – DC component
8th	Section B Current – RMS value
9th	Section B Active Power
10th	Section B Reactive Power
11th – 15th	Unused
16th	Neutral Current – RMS value
17th	Total Power Factor
18th	Line Frequency
19th	Sliding-average 15-minute Active Power Demand
20th	Sliding average 15-minute Reactive Power Demand
21st	Total (accumulated) Active Energy - Least Significant Word
22nd	Total (accumulated) Active Energy - Most Significant Word
23rd	Total (accumulated) Reactive Energy - Least Significant Word
24th	Total (accumulated) Reactive Energy - Most Significant Word
25th	Firmware Version / Diagnostic Value

Data reported to the PLC for Synchronization Monitoring

The units reported depend on the whether the Relative or Absolute Reporting mode is selected. See the section “Interpretation of Reported Results” later in this chapter for details.

- Status Bits
- RMS value of Phase A Grid Line Voltage
- RMS value of Phase A Generator Voltage
- RMS value of Phase B Generator Voltage
- RMS value of Phase C Generator Voltage
- Phase Shift between Grid Line and Generator Voltages
- Generator Frequency
- Grid Line Frequency

%AI Words in Synchro Monitor Mode

The data reported to the PLC by the PTM unit running in Synchro Monitor Mode is detailed in the following table. To determine exact memory address for these %AI words, determine the starting address for the PTM's %AI memory (this is assigned when the PTM is configured, as described in "Configuration" earlier in this chapter), then match the word to the applicable memory location. For example, if the starting %AI address was configured to be %AI0016, then the 1st word in the table below would be %AI0016, the 2nd word would be %AI0017, the 3rd word would be %AI0018, etc.

Table 2-7. %AI Feedback Data from the PTM in Synchro Monitor Mode

%AI Word Data Sent from Processing Module to PLC in Single-Phase Power Monitor Mode	
%AI Word	**Description**
1st	RMS value of Phase A Grid Line Voltage
2nd	RMS value of Phase A Generator Voltage
3rd	RMS value of Phase B Generator Voltage
4th	RMS value of Phase C Generator Voltage
5th	Phase Shift between Grid Line and Generator Voltages
6th	Generator Frequency
7th	Grid Line Frequency
8th – 24th	Unused
25th	Firmware Version / Diagnostic Value

Interpretation of Reported Results

Many reported values can be configured as relative values with respect to reference values, or they can represent those physical variables directly in Volts, Amperes, Watts, etc. If the **Display Mode** %Q flag bit (fifth bit) is set to logic 0, the results are reported as relative values. If this flag bit is set high, the results are reported as absolute values.

Relative Reporting Mode

The reported values in this mode must be interpreted as the signed fractional values. The maximum positive value of 32767 (0x7FFF) corresponds to the fractional value of 0.999969482 which can be rounded to +1.0. Similarly, the maximum negative value of -32768 (0x8000) represents a fractional value of -1.0. A value of 16384 (0x4000) represents +0.5, -16384 (0xC000) represents -0.5, etc. The following equation shows the relationships between a 16-bit integer and a fractional value in decimal format. The Integer Value is a reported value by the PTM unit:

Fractional Value = Reported Integer Value / 32768

The following table contains the reference values required for the interpretation of reported results. Also see the section “Parameters Common to Both Reporting Modes” later in this chapter.

Table 2-8. Relative Reporting Mode Reference Values

Relative Reporting Mode Reference (Maximum) Values	Peak Values
REFERENCE VOLTAGE – V_{REF}	200 V
REFERENCE CURRENT – I_{REF}	10 A
REFERENCE ACTIVE POWER – P_{REF}	2000 W
REFERENCE REACTIVE POWER – Q_{REF}	2000 VAR
REFERENCE 3-PHASE ACTIVE POWER – Pt_{REF}	6000 W
REFERENCE 3-PHASE REACTIVE POWER – Qt_{REF}	6000 VAR
REFERENCE 2-SECTION ACTIVE POWER – Pt_{REF}	4000 W
REFERENCE 2-SECTION REACTIVE POWER – Qt_{REF}	4000 VAR
REFERENCE ACTIVE ENERGY – EPt_{REF}	Pt_{REF} * sec
REFERENCE REACTIVE ENERGY – EQt_{REF}	Qt_{REF} * sec
REFERENCE TOTAL POWER FACTOR	1.000

Caution

Applying higher voltages than 150 V RMS or higher currents than 7 A RMS to the PTM Interface board could lead to erroneous results accompanied by appropriate fault status bit (Input Signal Range) set to 1 and the red LED flashing or steady on.

The actual value of Voltage (Current, Power, and Energy) is calculated as:

Actual Value = Fractional Value ∗ Reference Value

or, in one combined equation:

Actual Value = Reported Integer Value / 32768 ∗ Reference Value

Absolute Reporting Mode

In this mode all the reported Voltages, Currents, Powers, etc. represent actual values of the measured physical variables. Since the units reported are integer values (decimal values are not supported) the Units column in the following table shows what a reported value of one (1) represents. Also see the section "Parameters Common to Both Reporting Modes" later in this chapter.

Table 2-9. Absolute Reporting Units

Absolute Reporting Mode Units	Units
VOLTAGE [V]	1 = 0.1 V
CURRENT [I]	1 = 0.001 A
ACTIVE POWER [P]	1 = 1 W
REACTIVE POWER [Q]	1 = 1 VAR
ACTIVE ENERGY [EPt]	1 = 1 Wsec
REACTIVE ENERGY [EQt]	1 = 1 VARsec
TOTAL POWER FACTOR	1 = 0.001

Phase n# Power

- The **Phase #n Active Power** has a positive sign for consumed power and a negative sign for generated power.
- The **Phase #n Reactive Power** has a positive sign for capacitive loads and a negative sign for inductive loads.

Active and Reactive Total Energy (%AI Words 21 - 24)

Total Active Energy is reported in %AI Words 21/22 and Total Reactive Energy is reported in %AI words 23/24. Each of these double-integer words contains a running total of power consumed in Watt-seconds. The average power measured during the last 1-second time period is added to this total every second. To calculate the value of **energy** in kWh units, this value must be divided by a constant of $3.6*10^6$ (3,600,000) in the PLC ladder program. These double-integer %AI words can accumulate a maximum value of 2,147,483,647, after which they roll over to zero. The next table

shows the worst case times (minimum time) for this rollover to occur, based upon a continuous power consumption at the maximum values shown in Table 2-8.

Table 2-10. Theoretical Worst Case Rollover Times

Theoretical Worst Case Rollover Times		
Mode	**Non-Sinusoidal Waveform**	**Sinusoidal Waveform**
Absolute Reporting Mode	99 hours	198 hours
Relative Reporting Mode	18 hours	36 hours

In a practical application, the actual rollover times could be considerably longer. We recommend you include a rollover time consideration in your design process to ensure that you don't lose any data. There are many possible ways to handle the rollover issue. The next paragraph discusses one of these.

Handling %AI Word Rollover

Divide the value received from the PTM in the %AI double-integer word register by $3.6*10^6$ (3,600,000) to convert the data to kWh, as noted above. At fixed intervals, before the rollover occurs, add this scaled value (the output of the divide instruction) to a separate PLC double-integer register, then immediately reset (set to a value of zero) the PTM's %AI words 21 – 24. The reset is done by changing the PTM Operation bit (the first %Q bit) from logic 1 to logic 0 for one PLC scan only (you can use a transition coil to accomplish this). Note that this action only resets %AI words 21 – 24. The values in the other %AI words are retained. Since the value obtained from the divide operation is relatively small, data would accumulate in the separate PLC register for a relatively long time before rolling over. Additional ladder logic could be used to capture a total for a specific period of time, such as for a one-month period.

Note that for CPUs (models 311-341) that do not support floating-point (real) math instructions, the Divide Instruction does not retain a remainder - it rounds down to the nearest whole number, which means that a fraction of one kWh would be lost from the total. The more frequently the reset is performed, the greater the impact that this cumulative error would have on the total. If greater accuracy with those CPUs is desired, a Modulo divide instruction, which outputs only the remainder of a divide operation, could be used to supplement the Divide instruction. CPUs (models 350-364) that support floating-point math retain the remainder from a division operation, so this would not be an issue if using one of them.

Maintaining Your Data

Memory in the PTM module is volatile. However, the %AI words used to transfer data from the PTM are battery-backed RAM memory (unless you are using a battery-less scheme). To avoid loss of data, it is important to ensure that the backup battery is in good condition. The life of an installed backup battery is approximately one year (shelf life is five years). Note that if the PLC is powered down, the data stored in the PTM will be reset to zero. When power is restored, you should have a way of dealing with this. For example, you probably wouldn't want to write the zero value from the PTM into the register that was accumulating the Total Energy value. So you would need some ladder logic to sense this and capture your total in a separate register. For general information on protecting Series 90-30 PLC data, refer to Chapter 6, "Memory Backup and Backup

Battery" in the *Series 90-30 PLC Installation and Hardware Manual*, GFK-0356P (or later version).

Sliding Average (3-Phase) 15-Minute Power Demand (%AI Words 19 and 20)

%AI word 19 is for Active power and %AI word 20 is for Reactive power. These two %AI words maintain a sliding 15-minute average power consumption value. This value is useful for utilizing load shedding to minimize the cost of demand usage charged by your electric utility. This value is maintained even if the PTM's Operation bit (the first %Q bit) is turned off (Disabled).

Total Power Factor (%AI Word 17)

Total Power Factor is a fractional value expressed as an integer. A positive power factor represents power consumed and a negative power factor indicates power generated. Values closer to zero represent poorer power factors; values closer to one represent better power factors. A value of one is the ideal power factor. Power factor is often expressed as a percentage, with a power factor of one being equal to 100 percent.

The reported value ranges from –1000 to +1000. The actual value range is –1.000 to +1.000. For example, a reported value of +874 would equal an actual power factor of +0.874 (87.4%); a reported value of 1000 would equal an actual power factor of +1.000 (100.0%)

Parameters Common to Both Reporting Modes

In either Relative or Absolute modes the reported values in the table below represent actual values of the measured physical variables. Since the units reported are integer values (decimal values are not supported) the Units column in the following table shows what a reported value of one (1) represents.

Table 2-11. Parameters Common to Relative and Absolute Modes

Relative and Absolute Reporting Mode Units	Units
LINE (GENERATOR) FREQUENCY	1 = .01 Hz
PHASE SHIFT	1 = 0.1 degree

Line (Generator) Frequency is an integer value directly representing the frequency in 0.01 Hz units. If the Generator frequency is below 30 Hz, a zero value is reported. If the Line frequency is below 30 Hz, all the reported values (except the total energy – in Power Monitor Mode) are reported as zeros. For example, a reported value of 5947 would equal an actual frequency of 59.47 Hz.

Phase Shift (between Bus Line and Generator Voltage) is an integer value directly representing a phase shift in 0.1-degree units. For example, a reported value of 17 would equal an actual phase shift of 1.7 degrees.

%I Status flags returned by the PTM

The 16 %I Status Bits returned to the PLC contain important flags, detailed in the following table.

Table 2-12. %I Status Bits from the PTM

%I Status Bits Sent from Processing Module to PLC	
%I BIT	**Value**
1st	PTM Operating Normally
2nd – 5th	Spares – not used at this time
6th	Input Signal Range: 0 – valid, 1 - not valid*
7th	Phase A Voltage: 0 – present, 1 - not present*
8th	Phase Polarity: 0 – valid, 1 - not valid*
9th	V_{GA} : 0 – valid, 1 – not valid
10th	I_N : 0 – valid, 1 – not valid
11th	V_A : 0 – valid, 1 – not valid
12th	I_A : 0 – valid, 1 – not valid
13th	V_B : 0 – valid, 1 – not valid
14th	I_B : 0 – valid, 1 – not valid
15th	V_C: 0 – valid, 1 – not valid
16th	I_C : 0 – valid, 1 – not valid

* If the 6th, 7th, or 8th bits are logic 1, the Fault LED will turn ON

1st Bit: PTM Operating Normally: This is the "Heart Beat" bit and it is toggled by the PTM unit every scan. This can used by the PLC program to determine if the PTM is operating correctly.

6th Bit: Input Signal Range: If flag bit is set, some input variable (voltage or current) exceeds the Reference Value. This may also occur if the channel gain constants are incorrectly set.

7th Bit: Phase A Voltage: If this flag bit is set, the Phase A Voltage (V_A in Power Monitor Mode or V_{GA} in Synchro Monitor Mode) is not applied or is below 30 Hz in frequency. The PTM unit can not execute any calculations under these conditions. All the reported values (except the total energy – in Power Monitor Mode) are reported as zeros.

8th Bit: Phase Polarity: If flag bit is set, the Phase Active Powers in the 3-phase system have mixed signs which is an indication that either one of the voltage or current of one phase is incorrectly connected in reverse.

9th –16th Bits: Vn / In: If one of these status bits is set, the applicable variable is not being measured or cannot be reconstructed. This indicates that the associated value returned by the PTM is invalid and should not be used. For example, when in Delta Mode, the neutral current cannot be reconstructed from the phase currents; thus the 10th Bit would be set to logic one to indicate the value of I_N (neutral current) is invalid (in Delta Mode, the neutral current does not exist).

Chapter 3 Installation

The PTM passes the requirements of CE mark testing when mounted in a metal cabinet. The metal cabinet reduces emissions by both the module and the PLC that interfaces to it.

Field wiring to the PTM consists of the connection cable between the PTM Interface board and the PTM Processing module, the leads to user potential and current transformers and frame ground connections from the Interface board to the chassis. No CT shorting bars are provided on the PTM Interface board and must be supplied by the user. The maximum length of the PTM Interface Cable is one meter with shorter lengths recommended.

In all installations, the use of potential transformers is recommended and will provide complete isolation for all signals connected to the PTM Interface board. The signals on the PTM Interface board are scaled down to 1VAC for processing by the PTM processor module.

General Wiring Notes

In the following connection diagrams, the line connections are labeled L1, L2, and L3. When the user wires the Interface board into a system, the decision must be made which line will correspond to which phase. Usually, L1 will correspond to phase A, L2 with phase B, and L3 with phase C. Once the user decides how they will connect the system together, the labels L1, L2 and L3 can be changed to A, B, and C according to how the user wishes. Then the diagrams can be followed and the connections made.

Since phase rotation in not important to the PTM, the user is free to select any one of six connection possibilities for the wiring.

The Interface board can accommodate wire sizes up to 10AWG. Copper wires and ferrules are recommended for Interface board connections, but aluminum wiring can be used if necessary. To use aluminum wire, the wire must be stripped, burnished, then immediately dipped into a non-acid and non-alkali material, such as neutral Vaseline before connection. Connections should be torqued to 0.5 to 0.6 Nm (7.3 to 8.8 ft-lb).

Note that the Interface board's voltage common terminal is allowed to differ from ground potential up to 90VAC or 130V peak.

Warning

When the module is used to measure a 3-Phase Delta system or several independent systems, potential transformers must be used for voltage isolation and scaling purposes. When connecting the Interface board directly between a branch circuit and a small load, the over current rating of the branch circuit must be 15 Amps or less. Please refer to the diagrams following.

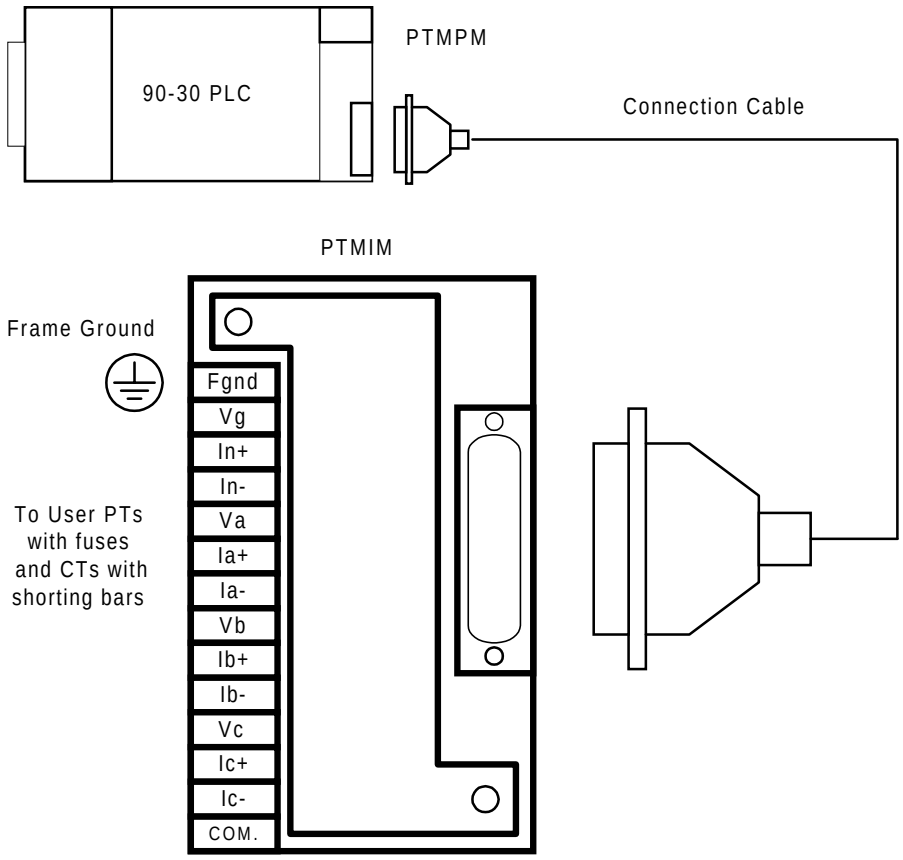

Figure 3-1. Basic system configuration

Mounting Location

It is recommended that Processing module(s) be mounted in a slot at or near the end of the PLC and that the Interface board be mounted to the panel to the side of the PLC (the Interface board mounts on a standard 35 mm DIN-rail). This will keep the power wiring to the Interface board physically separated from PLC signal wiring, thus reducing the opportunity for noise coupling.

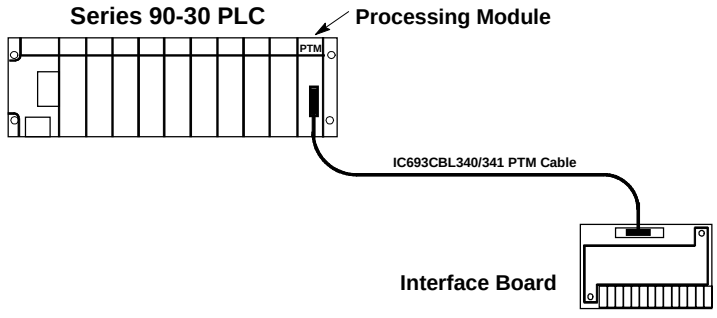

Figure 3-2. PTM Mounting Location

Safety Cautions

Interface Board Frame Ground Connection

The basic system configuration consists of the Series 90-30 PLC, the PTM Processing module, and the PTM Interface board. A special interface cable is used to connect the Processing module to the Interface board. **The Interface board must have frame ground connected.** The frame ground will ensure that the metal safety cover over the components on the Interface board is safely at ground potential. In the diagrams following, specific wiring configurations are detailed. **Make sure that the safety features detailed in the drawings are included in your installation. Failure to do so could result in personal injury or death and equipment damage.**

General Safety Warnings

WARNING: DO NOT TOUCH the connectors or wiring after powering up the PTM system. Hazardous voltages exist, and death or injury may result.

FUSES on input and output leads for the Potential Transformers (PTs) are mandatory.

CURRENT TRANSFORMER (CT) shorting bars are mandatory.

The Interface board frame ground connection must always be installed, and must be installed before any other wiring is attached.

Wiring Diagrams

Warning

Be sure you read and understand all safety-related information in this manual before attempting to wire or use the PTM.

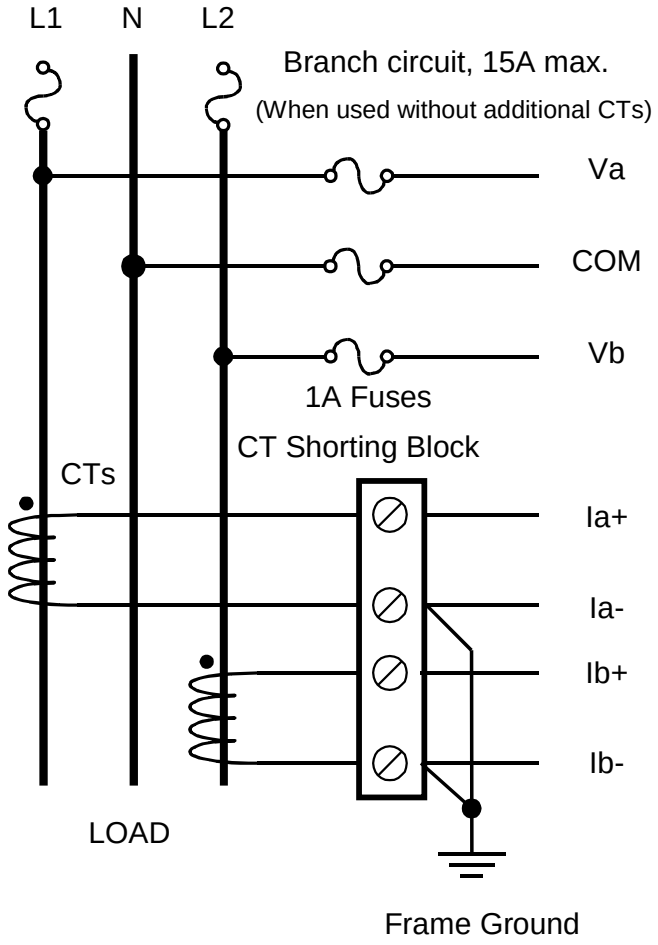

Figure 3-3. Connections for 120/240 VAC system with CTs

The connections given in the figure above detail the installation for a typical North American 120/240 volt AC 3-Wire Single Phase connection. The neutral is connected to a ground point, usually at the main power distribution panel.

Extra mandatory equipment includes protection fuses for the voltages and a CT shorting block. These will allow replacement of the PTM Interface board with the system still energized. To replace the Interface board, the fuses are removed and the CTs shorted. Then the connections on the Interface board can be removed safely. The Processing module can be replaced simply by powering off the PLC and replacing the module. This can be done without disturbing the wiring field wiring on the Interface board.

Operation of the Interface board at rated currents can be done without CTs but this configuration is not recommended (Currents will necessarily have line potential thus additional safety concerns must be carefully addressed).

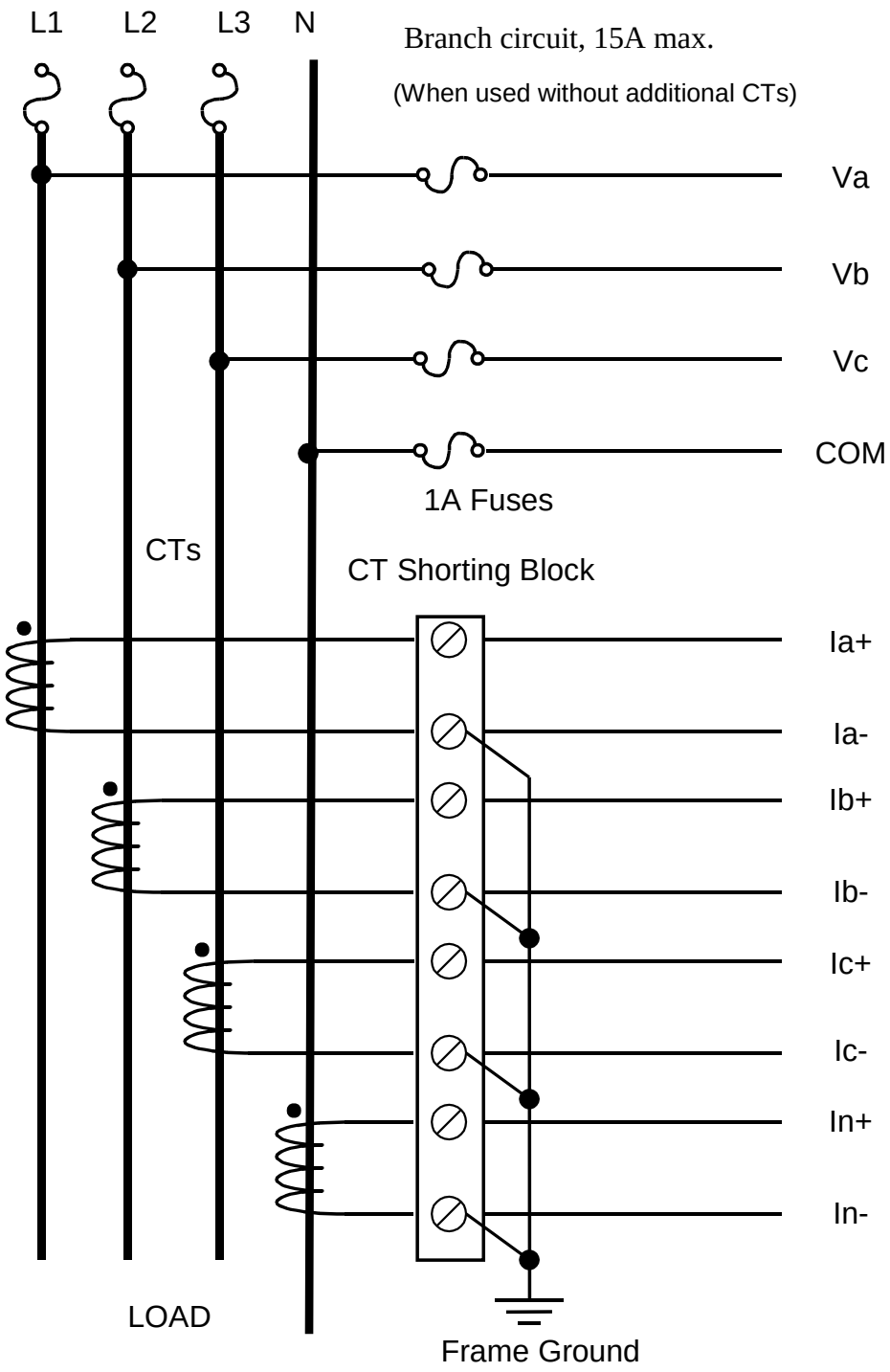

Figure 3-4. User Connection Diagram, WYE 3-Phase 4-Wire system

The connections detailed in Figure 3-4. show the situation where a 3-Phase 120/208V system is being monitored. Isolation PTs are not required but are recommended as an additional safety measure. The neutral must be connected to a ground point and this is usually at the main power distribution panel.

As with the previous configuration, the unit can be wired in this configuration without CTs. This configuration is not recommended again since the current leads will be at line potential raising additional safety concerns. The CT used on the neutral is not necessary and only provides the user with a direct measurement of neutral current. If this CT is not included, the PTM will calculate the neutral current from the addition of all the three line current inputs.

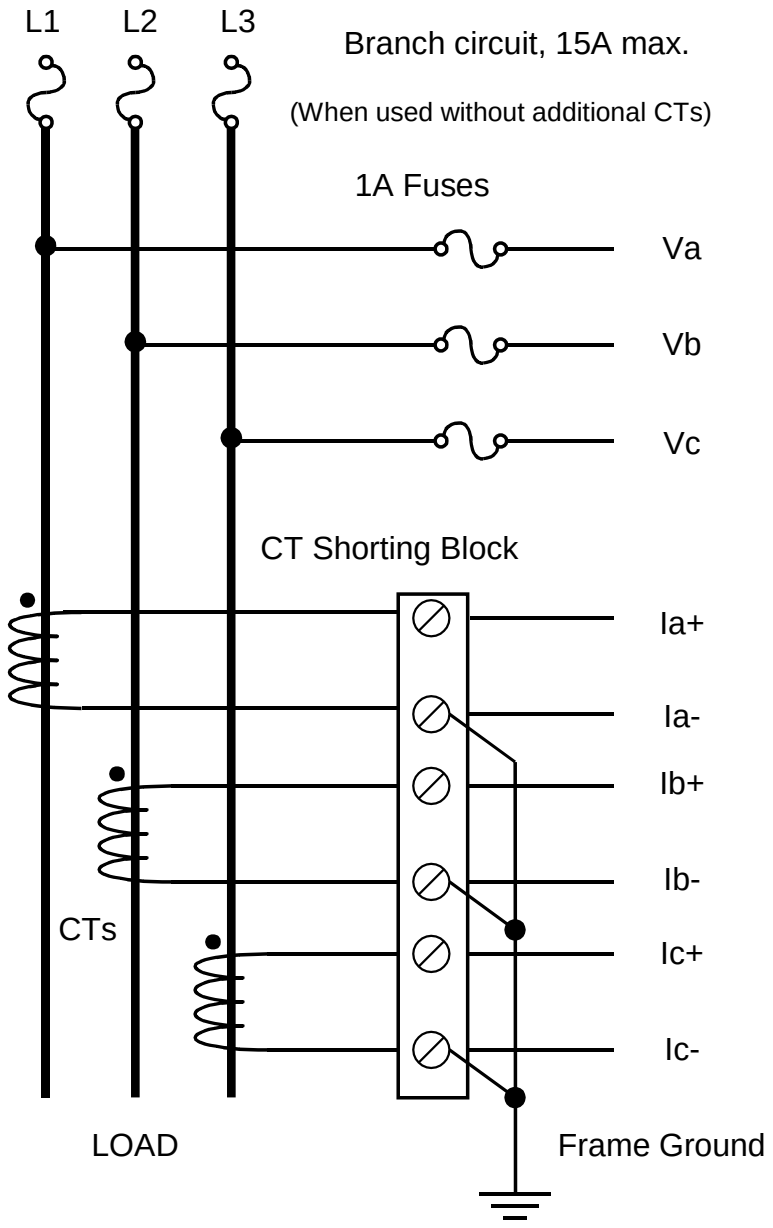

Figure 3-5. User Connections for 120/208 3-Phase 3-Wire Delta system

The connections detailed in Figure 3-5. show how a delta load is connected to the Interface board. Note that the PTM sees the installation as a WYE system (and must be configured as such). The Interface board circuitry itself forms an independent common neutral for all of the phases. In addition, one of the CTs is optional.

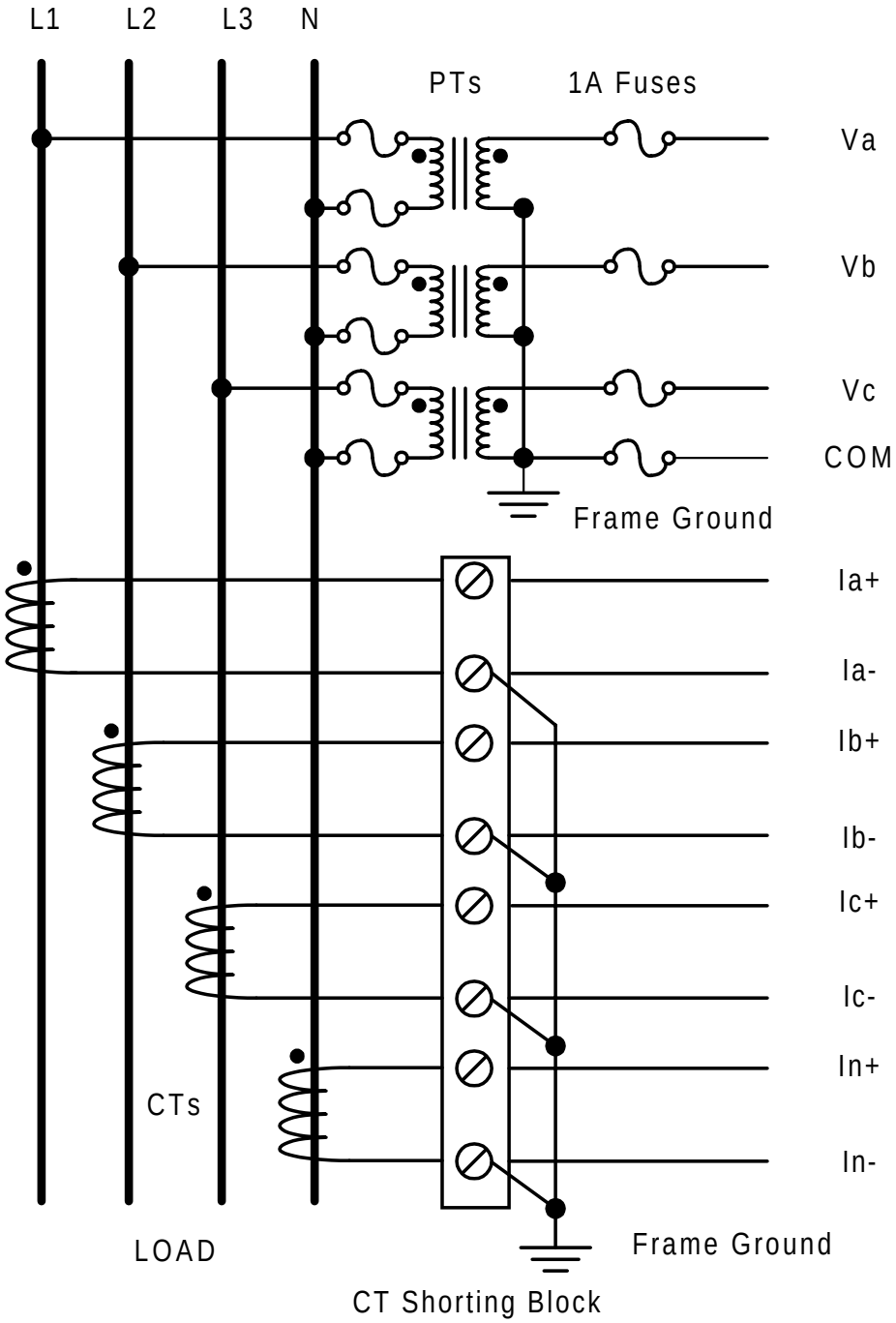

Figure 3-6. Connection to 3-Phase 4-Wire system with 3 PTs

In Figure 3-6, the connections for a typical 3-phase, 4-wire system are shown. The PTs are selected to take the nominal line voltage down to the nominal 120VAC that can be processed by the Interface board/PTM processing module system. Note that the additional scaling for each CT and PT must be applied to all the results given by the PTM through the 90-30 PLC.

The primaries and secondaries of each potential transformer should be fused for maximum protection. A fuse failure is an indication of wiring problems within the system.

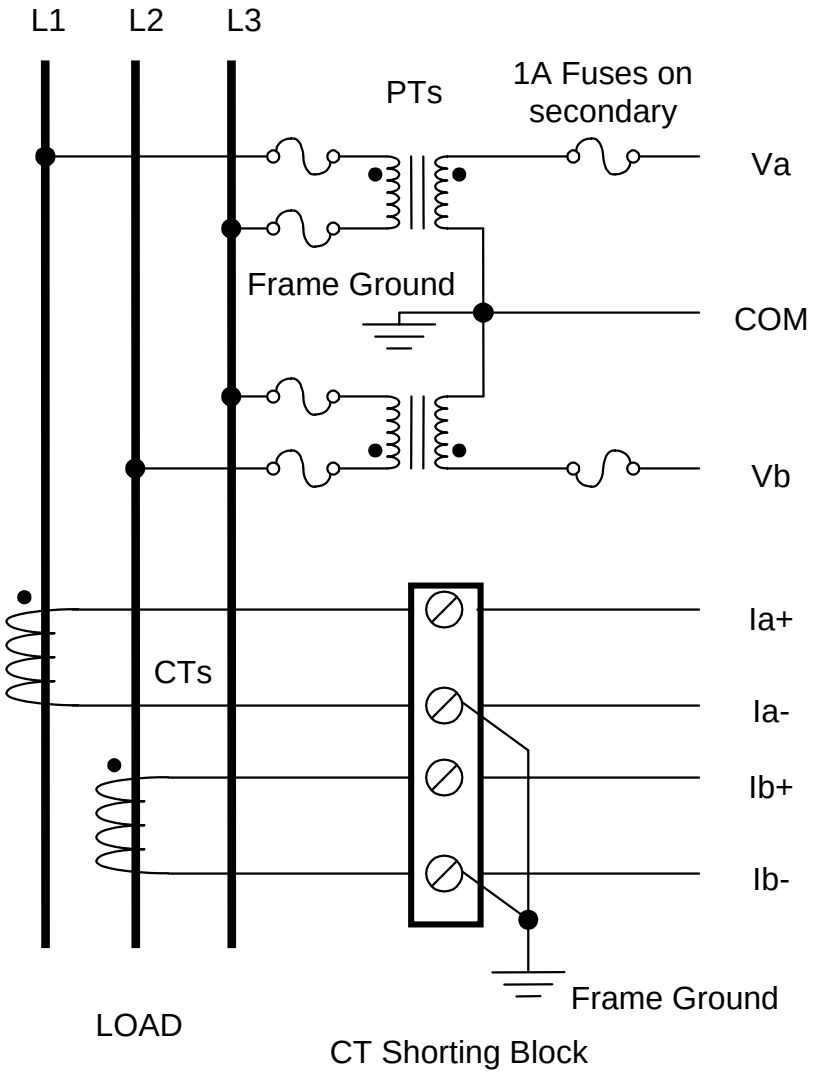

Figure 3-7. Configuration for 3-Phase 3-Wire Delta system with 2 PTs

The system detailed in Figure 3-7. shows two PTs being used in an open delta configuration connected to the Interface board. Note that in this mode (selected through the 90-30 configuration parameters) the line to line voltage must be scaled down to the level of 120VAC nominal. The third voltage and current are reconstructed from the other two by the Processing module. These must be indicated as not installed by the user. All additional scaling factors must be applied to the values being returned by the PTM by the 90-30 PLC program.

For safety considerations, both the primaries and secondaries of the potential transformers must be fused. . A fuse failure is an indication of wiring problems within the system. Note that in this configuration, the phasing of the potential transformers is slightly different.

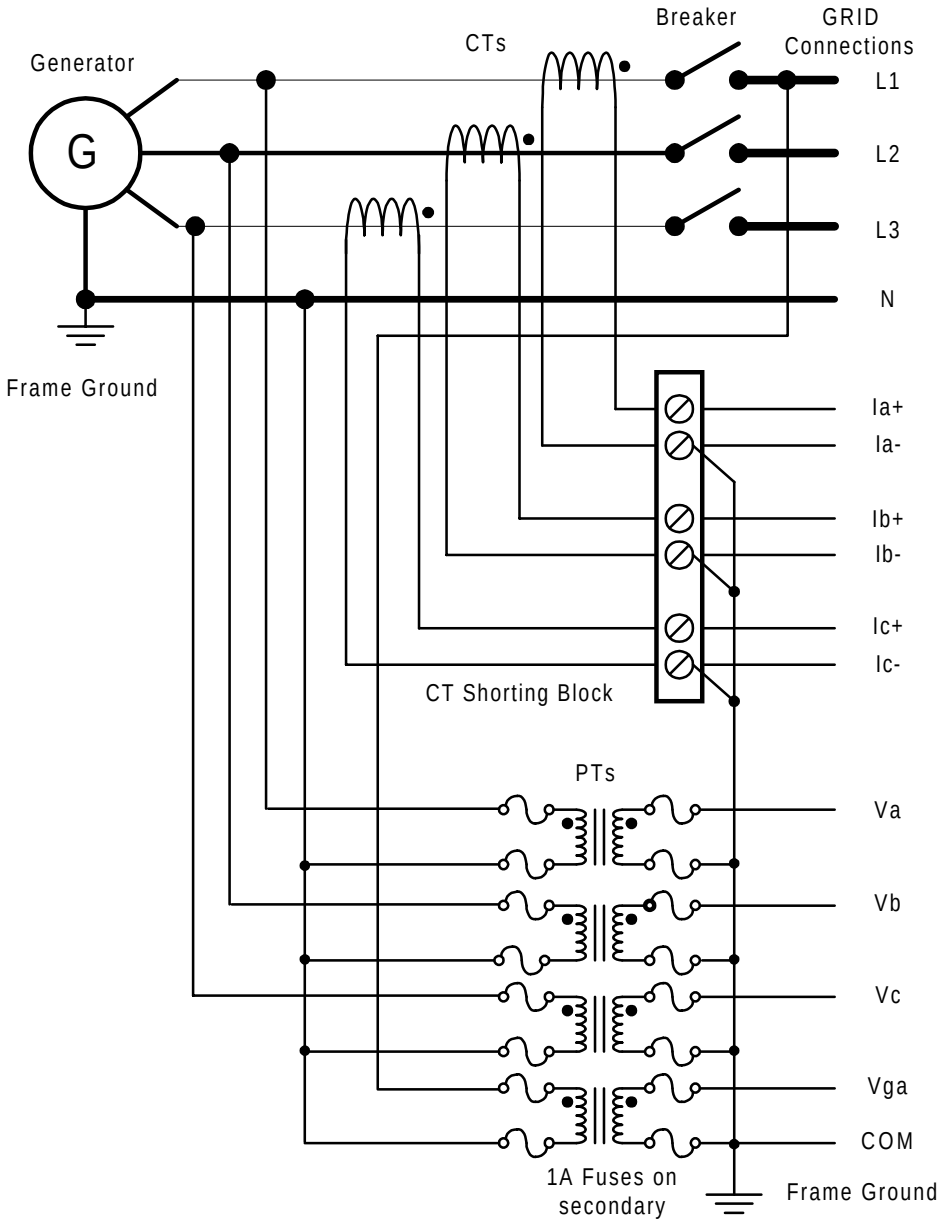

Figure 3-8. Wye Synchro/Power Monitor connection

In Figure 3-8. above, the PTM is connected between two systems, the Grid and Generator sub-systems. The PTM is selected to be in the Synchro Monitor mode when the breaker is open and the two systems are not running in synchronization. When the PLC program determines that the voltages and phases match between Phase A voltage on the grid and Phase A voltage on the generator, then the PLC can safely close the breaker.

When the PTM is used only in the Synchronization Monitoring mode, only the two PTs associated with Phase A of the generator and Phase A of the grid are required.

Also included in Figure 3-8. are the additional connections to phase B and C generator voltages and all line currents. After the breaker is closed, the PTM mode can be changed to monitor the power produced by the generator.

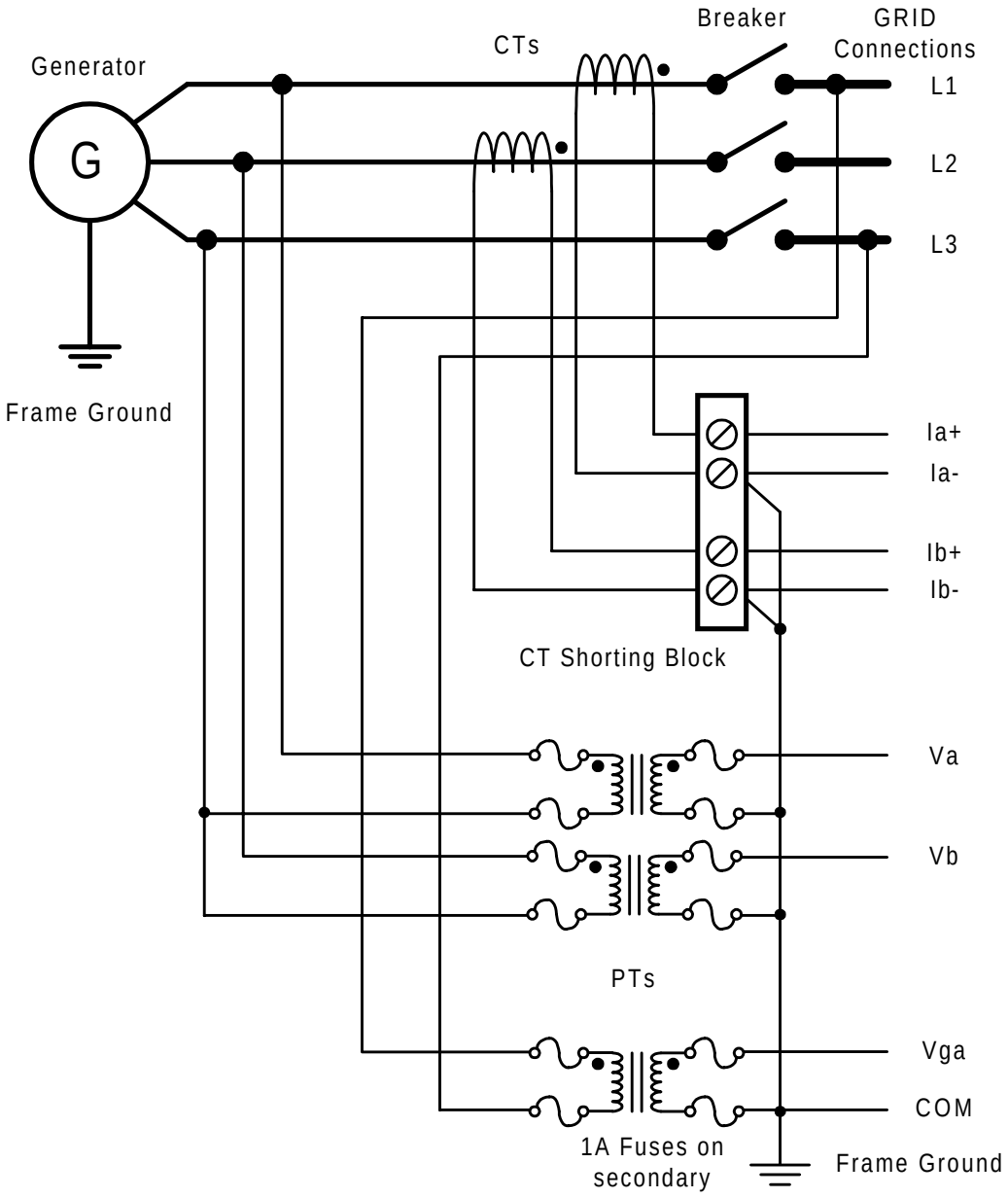

Figure 3-9. Delta Synchro/Power Monitor connection

In Figure 3-9. another possible generator connection method is pictured. In this arrangement, the system is connected as a Delta system and once the breaker is closed, the system can go into measuring power using the two watt-meter method described earlier.

The PTs used must scale the voltages down to the 120VAC nominal voltage required by the PTM. All scale factors present due to the PTs and CTs must be applied to the readings returned to the PLC by the PTM.

Fuses on the potential transformer primaries and secondaries are required. A fuse failure is an indication of wiring problems within the system.

Appendix A

Ladder Logic Example

Note: This example was created with Logicmater programming software. It contains the logic necessary to transfer Parameter data to the PTM via the two %AQ words. See Chapter 2 for a discussion of these Parameters and %AQ words.

```
(*************************************************************************)
(*                              Program:  PTM                            *)
(*                                                                       *)
(*        PLC PROGRAM ENVIRONMENT              HIGHEST REFERENCE USED    *)
(*    ---------------------------------      --------------------------  *)
(*                INPUT (%I):      512                  INPUT:      NONE  *)
(*               OUTPUT (%Q):      512                 OUTPUT:      NONE  *)
(*             INTERNAL (%M):     1024               INTERNAL:      NONE  *)
(*          GLOBAL DATA (%G):     1280            GLOBAL DATA:      NONE  *)
(*            TEMPORARY (%T):      256              TEMPORARY:      NONE  *)
(*             REGISTER (%R):     1024               REGISTER:   %R0013   *)
(*        ANALOG INPUT (%AI):       64          ANALOG INPUT:      NONE  *)
(*       ANALOG OUTPUT (%AQ):       32         ANALOG OUTPUT:   %AQ013   *)
(*                                                                       *)
(*                      PROGRAM SIZE (BYTES):      224                   *)
(*                                                                       *)
(*************************************************************************)
```

```
Program: PTM                C:\PROGRAM\LM90\PTM

12-04-98  08:07     GE FANUC SERIES 90-30/90-20/MICRO (v6.01)         Page  2
                            Power Transducer Module


(*****************************************************************************)
(*                                                                           *)
(*                                 BLOCK:  _MAIN                             *)
(*                                                                           *)
(*                                                                           *)
(*                               BLOCK SIZE (BYTES):   213                   *)
(*                             DECLARATIONS (ENTRIES):    70                 *)
(*                                                                           *)
(*                                                                           *)
(*                             HIGHEST REFERENCE USED                        *)
(*                           ----------------------------                    *)
(*                                                                           *)
(*                                    INPUT (%I):      NONE                  *)
(*                                   OUTPUT (%Q):      NONE                  *)
(*                                 INTERNAL (%M):      NONE                  *)
(*                               GLOBAL DATA (%G):     NONE                  *)
(*                                 TEMPORARY (%T):     NONE                  *)
(*                                  REGISTER (%R):   %R0013                  *)
(*                             ANALOG INPUT (%AI):      NONE                  *)
(*                            ANALOG OUTPUT (%AQ):   %AQ013                  *)
(*                                                                           *)
(*****************************************************************************)
```

```
Program: PTM                C:\PROGRAM\LM90\PTM                Block: _MAIN

12-04-98  08:07     GE FANUC SERIES 90-30/90-20/MICRO (v6.01)         Page  3
                           Power Transducer Module


|[  START OF LD  PROGRAM   PTM    ]       (*                              *)
|
|[     VARIABLE DECLARATIONS      ]
```

V A R I A B L E D E C L A R A T I O N T A B L E

REFERENCE	NICKNAME	REFERENCE DESCRIPTION
%I0001	PTM-TOG	PTM Operating Normally Flag
%I0002	PTM-ERR	PTM Error Flag
%I0003	SPARE1	Spare
%I0004	SPARE2	Spare
%I0005	SPARE3	Spare
%I0006	MAX-SMP	Samples exceeded MAX value
%I0007	VA-MISS	Phase A Voltage missing
%I0008	PWR-INV	Phase Powers have different sign
%I0009	VAG-INV	Vag: 0-valid,1-invalid
%I0010	IN-INV	In: 0-valid,1-invalid
%I0011	VAB-INV	Va/ab: 0-valid,1-invalid
%I0012	IA-INV	Ia: 0-valid,1-invalid
%I0013	VBC-INV	Vb/bc: 0-valid,1-invalid
%I0014	IB-INV	Ib: 0-valid,1-invalid
%I0015	VCA-INV	Vc/ca: 0-valid,1-invalid
%Q0001	PTM-ENA	PTM Op.: 0-disabled, 1-enabled
%Q0002	PTM-MD	PTM Mode: 0-Power,1-Synchro
%Q0003	MEAS-MD	Measurement Mode: 0-single,1-3Ph
%Q0004	PH-MODE	Single:0=3,1=1, 3PH:0=Y,1=Delta
%Q0005	DI-MODE	Display Mode: 0-Relative, 1=Absolute
%Q0006	SPARE8	Spare
%Q0007	SPARE9	Spare
%Q0008	SPARE10	Spare
%Q0009	PTAG-EN	PT Gen. Phase A: 0=NA, 1=USED
%Q0010	CTN-EN	CT Neutral: 0=NA, 1=USED
%Q0011	PTA-EN	PTa/ab: 0=NA, 1=USED
%Q0012	CTA-EN	CTa: 0=NA, 1=USED
%Q0013	PTB-EN	PTb/bc: 0=NA, 1=USED
%Q0014	CTB-EN	CTb: 0=NA, 1=USED
%Q0015	PTC-EN	PTc/ca: 0=NA, 1=USED
%Q0016	CTC-EN	CTc: 0=NA, 1=USED
%R0001	OFFSPTM	PTM parameter table offset
%R0002	OFF-PTM	PTM OFFSET parameter
%R0003	GAINPTM	PTM Module Gain
%R0004	CH1-PTM	PTM Channel 1 PTMIM gain
%R0005	CH2-PTM	PTM Channel 2 PTMIM gain
%R0006	CH3-PTM	PTM Channel 3 PTMIM gain
%R0007	CH4-PTM	PTM Channel 4 PTMIM gain
%R0008	CH5-PTM	PTM Channel 5 PTMIM gain
%R0009	CH6-PTM	PTM Channel 6 PTMIM gain
%R0010	CH7-PTM	PTM Channel 7 PTMIM gain
%R0011	CH8-PTM	PTM Channel 8 PTMIM gain
%R0012	DIAGADD	Diagnostic Address
%AI0001	VARMS	Phase A Voltage RMS
%AI0002	VA-DC	Phase A DC Component
%AI0003	IARMS	Phase A Current RMS

```
Program: PTM                C:\PROGRAM\LM90\PTM                Block: _MAIN

12-04-98  08:07     GE FANUC SERIES 90-30/90-20/MICRO (v6.01)         Page  4
                            Power Transducer Module


          %AI0004       PAWATTS      Phase A Active Power
          %AI0005       PAVARS       Phase A Reactive Power
          %AI0006       VBRMS        Phase B Voltage RMS
          %AI0007       VB-DC        Phase B DC Component
          %AI0008       IBRMS        Phase B Current RMS
          %AI0009       PBWATTS      Phase B Active Power
          %AI0010       PBVARS       Phase B Reactive Power
          %AI0011       VCRMS        Phase C Voltage RMS
          %AI0012       VC-DC        Phase C DC Component
          %AI0013       ICRMS        Phase C Current RMS
          %AI0014       PCWATTS      Phase C Active Power
          %AI0015       PCVARS       Phase C Reactive Power
          %AI0016       INRMS        Neutral Current RMS
          %AI0017       PF-TOT       Total 3-Phase Power Factor
          %AI0018       LFREQ        Line Frequency
          %AI0019       APD-15M      Tot. 3-Ph 15min. Active PwrDmd
          %AI0020       RPD-15M      Tot. 3-Ph 15min. Reactive PwrDmd
          %AI0021       LSW-ENA      Tot. 3-Ph Active Energy
          %AI0022       MSW-ENA      Tot. 3-Ph Active Energy
          %AI0023       LSW-ENR      Tot. 3-Ph Reactive Energy
          %AI0024       MSW-ENR      Tot. 3-Ph Reactive Energy
          %AQ001        POINTER      Parameter pointer
          %AQ002        VALUE        Paramter value
```

```
Program: PTM                C:\PROGRAM\LM90\PTM                Block: _MAIN

12-04-98  08:07     GE FANUC SERIES 90-30/90-20/MICRO (v6.01)         Page  5
                              Power Transducer

| << RUNG 4  STEP #0001 >>
|
|FST_SCN
|%S0001  +-----+
+--] [---+MOVE_+-
|        | INT |
|        |     |
|        |     | PTM par
|        |     | ameter
|        |     | table o
|        |     | ffset
|        |     | OFFSPTM
| CONST -+IN  Q+-%R0001
| +00001 | LEN |
|        |00001|
|        |     |
|        +-----+
|
|     #0001  LD        %S0001
|     #0002  FUNC 37   MOVIN
|                P1:  +00001
|                P2:   00001
|                P3:  %R0001
|
| << RUNG 5  STEP #0003 >>
|
|ALW_ON
|%S0007  +-----+
+--] [---+MOVE_+-
|        | INT |
|        |     |
|PTM par |     |
|ameter  |     | Paramet
|table o |     | er
|ffset   |     | pointer
|OFFSPTM |     | POINTER
|%R0001 -+IN  Q+-%AQ001
|        | LEN |
|        |00001|
|        |     |
|        +-----+
|
|     #0003  LD        %S0007
|     #0004  FUNC 37   MOVIN
|                P1:  %R0001
|                P2:   00001
|                P3:  %AQ001
|

REFERENCE NICKNAME      REFERENCE DESCRIPTION
 %S0007   ALW_ON
 %S0001   FST_SCN
 %R0001   OFFSPTM       PTM parameter table offset
 %AQ001   POINTER       Parameter pointer
```

```
Program: PTM                C:\PROGRAM\LM90\PTM                Block: _MAIN


12-04-98  08:07     GE FANUC SERIES 90-30/90-20/MICRO (v6.01)         Page  6
                            Power Transducer Module


| << RUNG 6  STEP #0005 >>
|
|ALW_ON
|%S0007  +-----+
+--] [---+ARRAY+-
|        |MOVE_|
|        | WORD|
|PTM     |     |
|OFFSET  |     |
|paramet |     | Paramte
|er      |     | r value
|OFF-PTM |     |  VALUE
|%R0002 -+SR DS+-%AQ002
|        | LEN |
|        |00012|
|PTM par |     |
|ameter  |     |
|table o |     |
|ffset   |     |
|OFFSPTM |     |
|%R0001 -+SNX  |
|        |     |
| CONST -+DNX  |
|  00001 |     |
|        |     |
| CONST -+N    |
|  00001 +-----+
|
|     #0005  LD        %S0007
|     #0006  FUNC
|                P1:  %R0002
|                P2:  %R0001
|                P3:   00001
|                P4:   00001
|                P5:   00012
|                P6:  %AQ002
|


REFERENCE NICKNAME      REFERENCE DESCRIPTION
 %S0007   ALW_ON
 %R0002   OFF-PTM       PTM OFFSET parameter
 %R0001   OFFSPTM       PTM parameter table offset
 %AQ002   VALUE         Paramter value
```

```
Program: PTM                C:\PROGRAM\LM90\PTM                Block: _MAIN

12-04-98  08:07     GE FANUC SERIES 90-30/90-20/MICRO (v6.01)         Page  7
                              Power Transducer Module


| << RUNG 7  STEP #0007 >>
|
|ALW_ON
|%S0007  +-----+                 +-----+
+--] [---+ ADD_+-----------------+ GE_ |
|        | INT |                 | INT |
|        |     |                 |     |
|PTM par |     | PTM par PTM par |     |
|ameter  |     | ameter  ameter  |     |
|table o |     | table o table o |     |
|ffset   |     | ffset   ffset   |     |
|OFFSPTM |     | OFFSPTM OFFSPTM |     |         +-----+
|%R0001 -+I1  Q+-%R0001  %R0001 -+I1  Q+---------+MOVE_+-
|        |     |                 |     |         | INT |
|        |     |                 |     |         |     |
|        |     |                 |     |         |     | PTM par
|        |     |                 |     |         |     | ameter
|        |     |                 |     |         |     | table o
|        |     |                 |     |         |     | ffset
|        |     |                 |     |         |     | OFFSPTM
| CONST -+I2   |          CONST -+I2   |  CONST -+IN  Q+-%R0001
| +00001 +-----+          +00012 +-----+  +00001 | LEN |
|                                                |00001|
|                                                |     |
|                                                +-----+
|
|     #0007  LD        %S0007
|     #0008  FUNC 60   ADD
|                P1:  %R0001
|                P2:  +00001
|                P3:  %R0001
|     #0009  FUNC 55   GE
|                P1:  %R0001
|                P2:  +00012
|     #0010  FUNC 37   MOVIN
|                P1:  +00001
|                P2:   00001
|                P3:  %R0001
|
|[      END OF PROGRAM LOGIC      ]
|
|     #0011  END OF PROGRAM
|
```

Appendix

B

IC693PTM340/341 PTM Interface Cables

These cables connect the PTM Processing module to the PTM Interface board. The only difference between the two cables is their lengths:

- IC693CBL340 is 19 inches (0.5 meter) long
- IC693CBL341 is 39 inches (1 meter) long

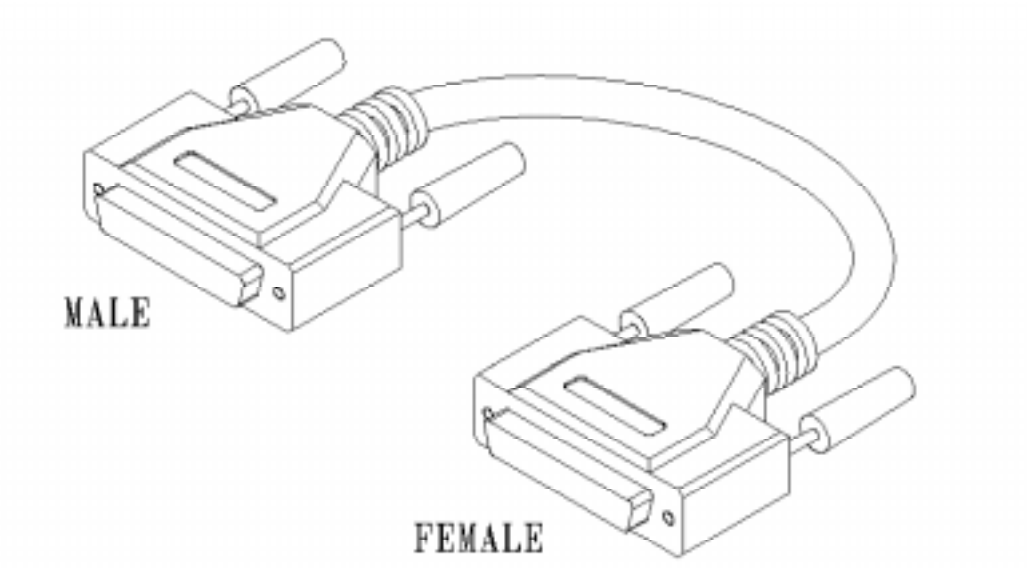

Figure B-1. Figure IC693CBL340/341 PTM Interface Cables

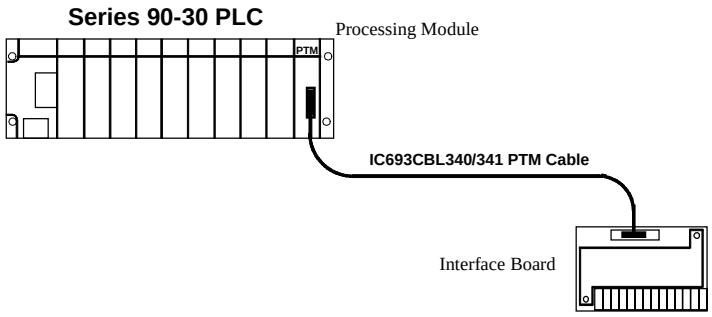

Figure B-2. PTM Component Mounting and Cable Connection

Warning

The PTM Interface board connects to hazardous voltages. Before installing, testing, or troubleshooting this board, you should refer to the complete instructions in this manual. Failure to follow the guidelines in the PTM User's Manual may result in personal injury, equipment damage, or both.

PTM Products Ordering Information

The Processing module and its Interface board are considered to be a matched set. Therefore, they are not sold separately. The two cables, however, may be ordered as separate items. There are four catalog numbers in the PTM product line:

- IC693PTM100 – This contains the Processing module, its matched Interface board, and the 19" (0.5 meter) interface cable.
- IC693PTM101 – This contains the Processing module, its matched Interface board, and the 39" (1 meter) interface cable.
- IC693CBL340 – The 19" (0.5 meter) interface cable.
- IC693CBL341 – The 39" (1 meter) interface cable.

Checking the IC693CBL340/341 Cables

The following information is supplied for the purpose of troubleshooting only (making continuity checks of the cable). These cables have straight through connections (pin 1 connects to pin 1, pin 2 connects to pin 2, etc.), although some pins have no connections. One end is connected to a male, all plastic DB-25 connector. The other end is connected to a female, all plastic DB-25 connector. The cable is a twisted-pair type, connected to minimize noise and crosstalk between signals.

Warning

These cables connect to a circuit board that has hazardous voltages present. These cables are carefully made to ensure the safety of the user and associated equipment. Therefore, we recommend you use only factory-built cables.

Connector Pin Number (Either End)	Signal Name and Function
1	VG+, Voltage Generator positive lead
2	IN+, Current Neutral positive lead
3	VA+, Voltage phase A positive lead
4	IA+, Current phase A positive lead
5	No Connection
6	VB+, Voltage phase B positive lead
7	IB+, Current phase B positive lead
8	VC+, Voltage phase C positive lead
9	IC+, Current phase C positive lead
10	Cable shield
11	No Connection
12	Frame Ground
13	No Connection
14	VG–, Voltage Generator negative lead
15	IN–, Current Neutral negative lead
16	VA–, Voltage phase A negative lead
17	IA–, Current phase A negative lead
18	No Connection
19	VB–, Voltage phase B negative lead
20	IB–, Current phase B negative lead
21	VC–, Voltage phase C negative lead
22	IC–, Current phase C negative lead
23	No Connection
24	No Connection
25	Frame Ground

Appendix C Glossary of Terms and Acronyms

A/D	Analog to digital. Refers to converting an analog signal to a digital form that can be used by a PLC or other digital microprocessor-based system.
ANSI	American National Standards Institute
Apparent power	The product of rms voltage and rms current in a circuit, with no consideration for phase angle.
CE mark	European compliance mark of the European Union. Generally required for products sold in Europe.
CISPR11	International Special Committee on Radio Interference. Standard 11 pertains to industrial equipment
CT	Current transformer
Current transformer	An instrument transformer used for measuring electrical current. The conductor to be measured is passed through the current transformer's center (one or more times), and serves as the transformer's primary winding. Or, if the transformer has a built-in primary winding, it is connected in series with the conductor to be measured. A built-in secondary winding produces a relatively low current proportional to the primary current. This secondary current is used for the measurement.
delta	A 3-phase circuit which, when drawn, resembles a triangle or the Greek letter delta (Δ).
DIN-rail	A standard size mounting rail, measuring 35 x 7.5 mm. The DIN-rail is usually mounted to a panel and is often long enough to hold several devices. The devices that mount to a DIN-rail snap on and off the rail and do not require any additional mounting hardware
G	Unit of acceleration equal to the acceleration of gravity, which is approximately 32 feet (9.8 meters) per second per second.
grid	In power terminology, refers to a network for distributing power.

integers	A set of numbers composed of all positive and negative whole numbers, including zero. Fractional and decimal numbers are excluded.
k	Abbreviation for kilo (see kilo)
kilo	A prefix equal to a value of 1000
kvah	Kilovolt-amperes per hour
kvar	Kilovar. 1000 vars (see var)
kvarh	Kilovars per hour
kWh	Kilowatt hour. Unit of electrical energy equal to 1000 Watt-hours.
Phase angle	An angular measurement of the difference in time occurrence between corresponding points on two waveforms. In a reactive circuit, there will be a finite phase angle between voltage and current waveforms. In a purely resistive circuit, the phase angle is equal to zero, indicating that real power is equal to apparent power.
PLC	Programmable Logic Controller. The PTM works with a GE Fanuc Series 90-30 PLC.
Potential transformer	An instrument transformer used for measuring electrical potential (voltage). Its primary winding connects to the voltage to be measured. Its secondary winding produces a stepped-down voltage proportional to the primary voltage. The secondary voltage is used for the measurement.
Power factor	Ratio of real or active power to apparent power in an AC circuit
PT	Potential transformer
PTM	Power Transducer. This abbreviation is based upon the group of three letters in the product's catalog number, such as IC693PTM100.
Reactive	A circuit having either or both inductive or capacitive effects, in which these effects are high in comparison to resistive effects in the circuit.
Reactive power	The component of apparent power that does not go into producing real work. It is generally considered to be lost or wasted power, usually dissipated in the form of unwanted heat.
Real power	The component of apparent power that goes into producing real work. It is equal to volt-amperes multiplied by the power factor. It is expressed in watts or kilo-watts.
rms	Root-mean-square. Also know as "effective" value. It refers to the value of an alternating current that will give the same heating effect as a corresponding direct current.
UL	Underwriter's Laboratories. The UL mark indicates that a product has passed Underwriter's Laboratories tests.

UL/CUL	A dual United States-Canadian listing mark of Underwriter's Laboratories. May also be C-UL US
VA	Volt-ampere. Unit of apparent electrical power.
var	Volt-ampere reactive. Unit of reactive electrical power.
Watt-hour	Unit of electrical energy equal to consuming (or converting) power at the rate of one watt per hour. Equal to 3600 joules.
Wh	Watt-hour
wye	A 3-phase circuit which, when drawn, resembles the letter Y.

%

%AI words
  table, 2-11
%AQ Words
  parameters, 2-5
  table, 2-5
%I bits
  status bits, 2-17
  table, 2-17
%Q bits
  table, 2-3

A

Absolute reporting
  mode, 2-13
Absolute reporting mode
  units table, 2-13
Accuracy
  measurement, 1-6
Actual value
  formulas, 2-13
Agency
  approvals/listings, 1-7
Approvals/listings
  agency, 1-7

B

Backplane isolation, 1-5
Baseplate
  compatibility, 1-4

C

Cabinet
  mounting, 3-1
Cables
  picture, 1-9, B-1
  PTM interface, B-1
Catalog numbers
  of PTM products, 1-2
Communication
  protocol, 2-2
Compatibility
  with CPUs and baseplates, 1-4
Configuration
  %AI words, 2-8, 2-9, 2-11
  %AQ words, 2-5
  %I bits, 2-17
  %Q bits, 2-3
  parameter data, 2-2
Configurations
  power measurement list, 1-7
CPU
  compatibility, 1-4

D

Data
  maintaining, 2-14
  reported to PLC, 1-3
  scaling, 1-6
Definitions
  terms and acronyms, C-1
Demand value
  sliding average, 2-15
Diagrams
  wiring, 3-4
Dimensions
  cable, 1-9
  Interface borad, 1-8
  Processing module, 1-8

E

Energy
  total use reported, 2-13
Environment
  operating, 1-7

F

Fault
  LED indicator on PTMPM, 1-9

G

Generator
  line frequency, 2-16
Grounding
  Interface board, 3-3

H

Humidity rating, 1-7

I

IC693CBL340/341
  checking, B-3
  connecting, B-2
  data sheet, B-1
  lengths, B-1
  ordering information, B-2
  picture, 1-9, B-1
  pin-out list, B-3
Installation
  line phasing, 3-1
  mounting location, 3-2
  safety considerations, 3-3
  wiring diagrams, 3-4

Interface board
dimensions, 1-8
picture, 1-8
Isolation
backplane, 1-5

L

Ladder logic
example, A-1
LED
Processing module, 1-9

M

Maximum input values, 2-12
Measurement
accuracy, 1-6
ranges, 1-6
Mechanical shock
rating, 1-7
Memory
PLC requirement, 1-6
Mode
3-phase power monitor, 2-8
3-wire 1-phase power monitor, 2-9
absolute reporting, 2-13
power monitor, 1-2, 2-2
relative reporting, 2-12
synchro monitor, 1-3, 2-2, 2-11
Modes
operating, 1-2
Monitoring
data, 2-7, 2-10
Mounting
cabinet, 3-1
Interface board dimensions, 1-8
location, 3-2

P

Parameter data, 2-2
Parameters for %AQ words
table, 2-6
Peak input values, 2-12
Phase power, 2-13
Phase shift
between generator and bus, 2-16
Power factor data, 2-15
Power Monitor
mode, 2-2
mode, 3-phase, 2-8
mode, 3-wire 1-phase, 2-9
Power requirements
Processing module, 1-5
Processing module
dimensions, 1-8
picture, 1-8
power requirements, 1-5
Product list
PTM products, 1-2
Programming
ladder logic example, A-1
Protection
features, 1-7
PTM cable
picture, 1-9

R

Relative reporting
mode, 2-12
table, 2-12
Reported results
interpretation, 2-12
Resolution
measurement, 1-6
Rollover
%AI word, 2-14

S

Safety
installation, 3-3
warnings, 3-3
Scaling
measurement data, 1-6
Scan time
data exchange, 1-6
Specifications, 1-5
measurement, 1-5
Status
%I bits, 2-17
Synchro Monitor
mode, 2-2, 2-11

T

Temperature
operating and storage, 1-7

V

Vibration rating, 1-7

W

Wiring
notes, 3-1
Wiring diagram
120/208 3-phase, 3-wire delta, 3-6

120/240 single phase, 3-4
3-phase, 3-wire delts with 2 PTs, 3-8
3-phase, 4-wire with 3 PTs, 3-7
delta synchro power monitor, 3-10
wye synchro power monitor, 3-9
wye, 3-phase, 4-wire, 3-5
Wiring diagrams, 3-4